# Product data sheet

Specifications



## power relay, Harmony electromechanical relays, DIN rail or panel mount relay, 30A, 2CO, 12V DC

RPF2BJD

**Product availability: Stock - Normally stocked in distribution facility**

## Main

| | |
|---|---|
| **Range of Product** | Harmony Electromechanical Relays |
| **Series name** | RPF series |
| **Product or Component Type** | DIN rail/panel mount relay |
| **Contacts type and composition** | 2 C/O |
| **Relay Type** | Power relay |
| **[Uc] control circuit voltage** | 12 V DC |
| **Status LED** | Without |
| **Control Type** | Without lockable test button |
| **[Ithe] conventional enclosed thermal current** | 25 A -40…131 °F (-40…55 °C) relays side by side without a gap<br>30 A -40…131 °F (-40…55 °C) 13 mm gap between two relays |

## Complementary

| | |
|---|---|
| **Control circuit voltage limits** | 9.6...13.2 V |
| **[Ie] rated operational current** | 30 A 277 V AC) NO UL<br>20 A 28 V DC) NO UL<br>30 A 250 V AC) NO IEC<br>25 A 28 V DC) NO IEC<br>3 A 277 V AC) NC UL<br>3 A 28 V DC) NC UL<br>3 A 250 V AC) NC IEC<br>3 A 28 V DC) NC IEC |
| **Average consumption** | 1.7 W |
| **CAD overall width** | 1.3 in (33.7 mm) |
| **CAD overall height** | 2.7 in (68.5 mm) |
| **CAD overall depth** | 1.5 in (39.2 mm) |
| **Compatibility code** | RPF |
| **[Ui] rated insulation voltage** | 250 V IEC<br>300 V UL |
| **Maximum switching voltage** | 250 V IEC |
| **Drop-out voltage threshold** | >= 0.1 Uc |
| **minimum switching current** | 500 mA |
| **Maximum switching capacity** | 7500 VA/700 W |
| **Average resistance** | 86 Ohm at 68 °F (20 °C) +/- 10 % |
| **Mechanical durability** | 5000000 cycles |
| **Electrical durability** | 100000 cycles resistive |

Price is “List Price” and may be subject to a trade discount – check with your local distributor or retailer for actual price.

Disclaimer: This documentation is not intended as a substitute for and is not to be used for determining suitability or reliability of these products for specific user applications

| | |
|---|---|
| **Safety reliability data** | B10d = 100000 |
| **Operating rate** | <= 1200 cycles/hour under load<br><= 18000 cycles/hour no-load |
| **Utilisation coefficient** | 10 % |
| **Dielectric strength** | 2000 V AC between poles with basic<br>4000 V AC between coil and contact with reinforced<br>1500 V AC between contacts with micro disconnection |
| **[Uimp] rated impulse withstand voltage** | 4 kV 1.2/50 µs |
| **Protection category** | RT II |
| **Pollution degree** | 3 |
| **Mounting Support** | DIN rail<br>Panel |
| **Operating position** | Any position |
| **Test levels** | Level A group mounting |
| **Device presentation** | Complete product |
| **Contacts material** | Silver tin oxide |
| **Shape of pin** | Flat (faston type) |
| **Product Weight** | 0.181 lb(US) (0.082 kg) |

## Environment

| | |
|---|---|
| **Ambient air temperature for operation** | -40…131 °F (-40…55 °C) |
| **IP degree of protection** | IP40 conforming to IEC 60529 |
| **Standards** | UL 508<br>CSA C22.2 No 14<br>IEC 61810-1 |
| **Product Certifications** | CE<br>CSA<br>GOST<br>UL |
| **Ambient Air Temperature for Storage** | -40…185 °F (-40…85 °C) |
| **Vibration resistance** | 3 gn +/- 1 mm 10…150 Hz)5 cycles in operation<br>10 gn +/- 1 mm 10…150 Hz)5 cycles not operating |
| **Shock resistance** | 10 gnin operation<br>30 gnnot operating |

## Ordering and shipping details

| | |
|---|---|
| **Category** | US10CP221127 |
| **Discount Schedule** | 0CP2 |
| **GTIN** | 3389119401623 |
| **Returnability** | Yes |
| **Country of origin** | CN |

## Packing Units

| | |
|---|---|
| **Unit Type of Package 1** | PCE |
| **Nbr. of units in pkg.** | 1 |
| **Package 1 Height** | 1.654 in (4.200 cm) |

| | |
|---|---|
| **Package 1 Width** | 1.378 in (3.500 cm) |
| **Package 1 Length** | 2.717 in (6.900 cm) |
| **Package weight(Lbs)** | 2.928 oz (83.000 g) |
| **Unit Type of Package 2** | BB1 |
| **Number of Units in Package 2** | 10 |
| **Package 2 Height** | 5.906 in (15.000 cm) |
| **Package 2 Width** | 1.969 in (5.000 cm) |
| **Package 2 Length** | 7.874 in (20.000 cm) |
| **Package 2 Weight** | 31.993 oz (907.000 g) |
| **Unit Type of Package 3** | S02 |
| **Number of Units in Package 3** | 60 |
| **Package 3 Height** | 5.906 in (15.000 cm) |
| **Package 3 Width** | 11.811 in (30.000 cm) |
| **Package 3 Length** | 15.748 in (40.000 cm) |
| **Package 3 Weight** | 13.062 lb(US) (5.925 kg) |

## Contractual warranty

| | |
|---|---|
| **Warranty (in months)** | 18 |

## Environmental Data

Schneider Electric aims to achieve Net Zero status by 2050 through supply chain partnerships, lower impact materials, and circularity via our ongoing “Use Better, Use Longer, Use Again” campaign to extend product lifetimes and recyclability.

Environmental Data explained >

How we assess product sustainability >

### Environmental footprint

| | |
|---|---|
| Total lifecycle Carbon footprint | **28 kg CO2 eq.** |
| Carbon footprint of the manufacturing phase [A1 to A3] | **0.7 kg CO2 eq.** |
| Carbon footprint of the distribution phase [A4] | **0.1 kg CO2 eq.** |
| Carbon footprint of the installation phase [A5] | **0 kg CO2 eq.** |
| Carbon footprint of the use phase [B2, B3, B4, B6] | **27 kg CO2 eq.** |
| Carbon footprint of the end-of-life phase [C1 to C4] | **0.2 kg CO2 eq.** |
| Environmental Disclosure | **Product Environmental Profile** |

## Use Better

### Materials and Substances

| | |
|---|---|
| Packaging made with recycled cardboard | **Yes** |
| Packaging without single use plastic | **Yes** |
| EU RoHS Directive | **Compliant** |
| REACh Regulation | **Free of Substances of Very High Concern above the threshold** |
| California proposition 65 | **WARNING: This product can expose you to chemicals including: Nickel compounds, which is known to the State of California to cause cancer, and Di-isodecyl phthalate (DIDP), which is known to the State of California to cause birth defects or other reproductive harm. For more information go to www.P65Warnings.ca.gov** |

## Use Longer

### Lifetime extension

| | |
|---|---|
| Repair | **No** |

## Use Again

### Repack and remanufacture

| | |
|---|---|
| Recyclability potential, in % | **1** |
| Circularity Profile | **No need of specific recycling operations** |
| Take-back | **No** |

Dimensions Drawings

**Dimensions**

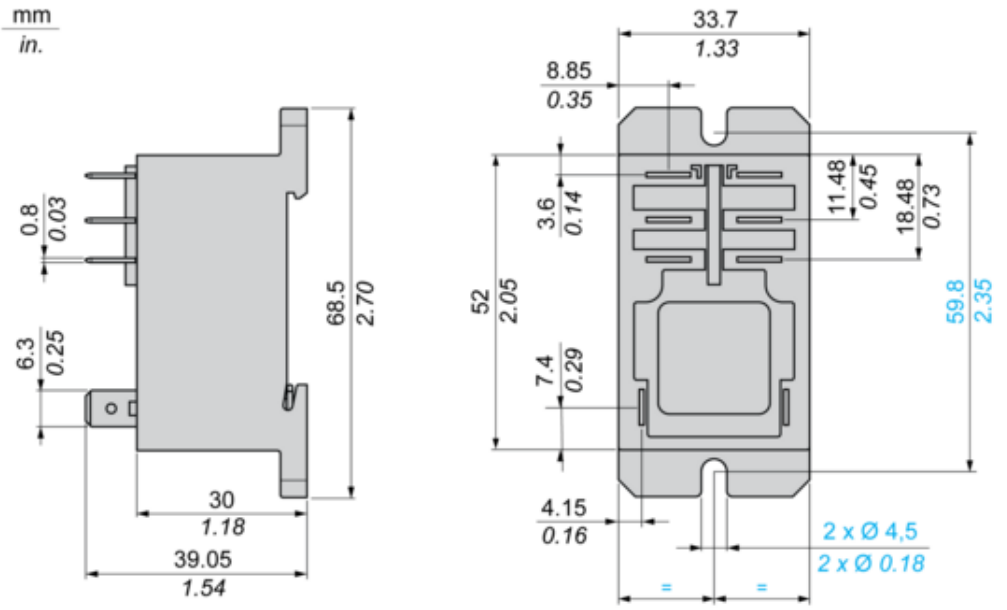

## Connections and Schema

### Wiring Diagram

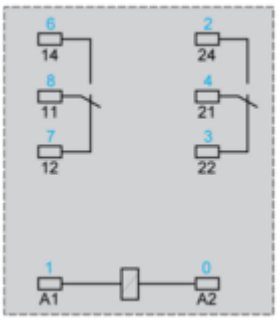


Symbols shown in blue correspond to Nema marking.

## Performance Curves

### Electrical Durability of Contacts

#### AC Resistive load

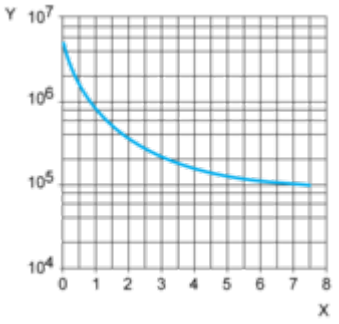


**X** Switching capacity (kVA)
**Y** Durability (number of operating cycles)

#### AC Reduction coefficient for inductive load (depending on power factor cos ϕ)

Durability (inductive load) = durability (resistive load) x reduction coefficient.

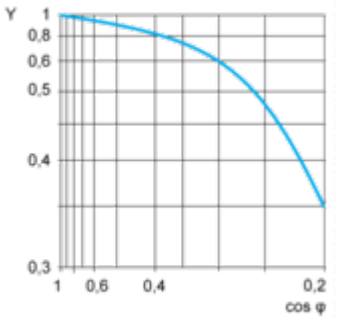


**Y** reduction coefficient

#### Maximum switching capacity on DC resistive load

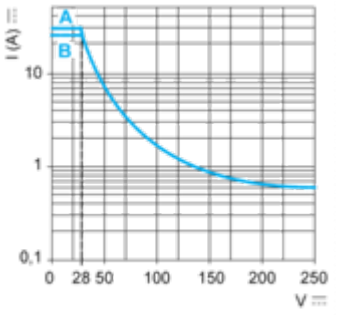


**A** 30 A
**B** 25 A
**Note :** These are typical curves, actual durability depends on load, environment, duty cycle, etc.

Technical Illustration

**Dimensions**

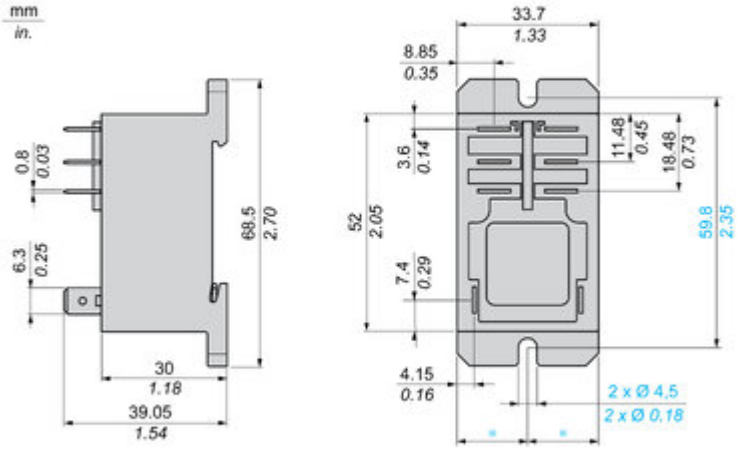

Image of product / Alternate images

**Alternative**





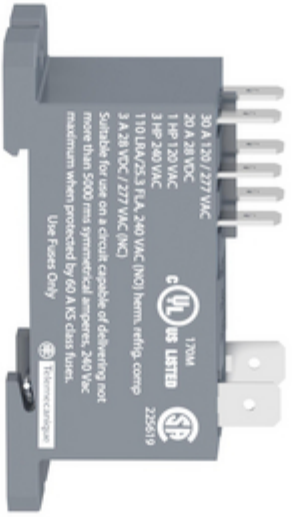
30 A 120 / 277 VAC
20 A 28 VDC
1 HP 120 VAC
3 HP 240 VAC
110 LRA/25.3 FLA, 240 VAC (NO) hermt. refrig. comp
3 A 28 VDC / 277 VAC (NC)
Suitable for use on a circuit capable of delivering not more than 5000 rms symmetrical amperes, 240 Vac maximum when protected by 60 A RS class fuses.
Use Fuses Only
c UL us LISTED
170M
225619







Image of product in real life situation

