Product data sheet

Specifications



power relay, Harmony electromechanical relays, DIN rail or panel mount relay, 30A, 2NO, 230V AC

RPF2AP7

Product availability: Stock - Normally stocked in distribution facility

Main

Range of Product	Harmony Electromechanical Relays
Series name	RPF series
Product or Component Type	DIN rail/panel mount relay
Contacts type and composition	2 NO
Relay Type	Power relay
[Uc] control circuit voltage	230 V AC 50/60 Hz
Status LED	Without
Control Type	Without lockable test button
[Ithe] conventional enclosed thermal current	25 A -40…131 °F (-40…55 °C) relays side by side without a gap 30 A -40…131 °F (-40…55 °C) 13 mm gap between two relays

Complementary

Control circuit voltage limits	184...253 V
[Ie] rated operational current	30 A 277 V AC) NO UL 20 A 28 V DC) NO UL 30 A 250 V AC) NO IEC 25 A 28 V DC) NO IEC
Average consumption	4 VA 60 Hz
CAD overall width	1.3 in (33.7 mm)
CAD overall height	2.7 in (68.5 mm)
CAD overall depth	1.5 in (39.2 mm)
Compatibility code	RPF
[Ui] rated insulation voltage	250 V IEC 300 V UL
Maximum switching voltage	250 V IEC
Drop-out voltage threshold	>= 0.15 Uc
minimum switching current	500 mA
Maximum switching capacity	7500 VA/700 W
Average resistance	15600 Ohm at 68 °F (20 °C) +/- 15 %
Mechanical durability	5000000 cycles
Electrical durability	100000 cycles resistive
Safety reliability data	B10d = 100000

Price is “List Price” and may be subject to a trade discount – check with your local distributor or retailer for actual price.

Disclaimer: This documentation is not intended as a substitute for and is not to be used for determining suitability or reliability of these products for specific user applications

Operating rate	<= 1200 cycles/hour under load <= 18000 cycles/hour no-load
Utilisation coefficient	10 %
Dielectric strength	2000 V AC between poles with basic 4000 V AC between coil and contact with reinforced 1500 V AC between contacts with micro disconnection
[Uimp] rated impulse withstand voltage	4 kV 1.2/50 µs
Protection category	RT II
Pollution degree	3
Mounting Support	DIN rail Panel
Operating position	Any position
Test levels	Level A group mounting
Device presentation	Complete product
Contacts material	Silver tin oxide
Shape of pin	Flat (faston type)
Product Weight	0.181 lb(US) (0.082 kg)

Environment

Ambient air temperature for operation	-40…131 °F (-40…55 °C)
IP degree of protection	IP40 conforming to IEC 60529
Standards	CSA C22.2 No 14 IEC 61810-1 UL 508
Product Certifications	CSA CE GOST UL
Ambient Air Temperature for Storage	-40…185 °F (-40…85 °C)
Vibration resistance	3 gn +/- 1 mm 10…150 Hz)5 cycles in operation 10 gn +/- 1 mm 10…150 Hz)5 cycles not operating
Shock resistance	10 gnin operation 30 gnnot operating

Ordering and shipping details

Category	US10CP221127
Discount Schedule	0CP2
GTIN	3389119401579
Returnability	Yes
Country of origin	CN

Packing Units

Unit Type of Package 1	PCE
Nbr. of units in pkg.	1
Package 1 Height	1.378 in (3.500 cm)
Package 1 Width	1.654 in (4.200 cm)

Package 1 Length	2.717 in (6.900 cm)
Package weight(Lbs)	2.963 oz (84.000 g)
Unit Type of Package 2	BB1
Number of Units in Package 2	10
Package 2 Height	1.772 in (4.500 cm)
Package 2 Width	5.709 in (14.500 cm)
Package 2 Length	7.874 in (20.000 cm)
Package 2 Weight	32.381 oz (918.000 g)
Unit Type of Package 3	S02
Number of Units in Package 3	60
Package 3 Height	5.906 in (15.000 cm)
Package 3 Width	11.811 in (30.000 cm)
Package 3 Length	15.748 in (40.000 cm)
Package 3 Weight	13.398 lb(US) (6.077 kg)

Contractual warranty

Warranty (in months)	18

Environmental Data

Schneider Electric aims to achieve Net Zero status by 2050 through supply chain partnerships, lower impact materials, and circularity via our ongoing “Use Better, Use Longer, Use Again” campaign to extend product lifetimes and recyclability.

Environmental Data explained >

How we assess product sustainability >

Environmental footprint

Total lifecycle Carbon footprint	**30 kg CO2 eq.**
Carbon footprint of the manufacturing phase [A1 to A3]	**0.8 kg CO2 eq.**
Carbon footprint of the distribution phase [A4]	**0.1 kg CO2 eq.**
Carbon footprint of the installation phase [A5]	**0 kg CO2 eq.**
Carbon footprint of the use phase [B2, B3, B4, B6]	**29 kg CO2 eq.**
Carbon footprint of the end-of-life phase [C1 to C4]	**0.2 kg CO2 eq.**
Environmental Disclosure	**Product Environmental Profile**

Use Better

Materials and Substances

Packaging made with recycled cardboard	**Yes**
Packaging without single use plastic	**Yes**
EU RoHS Directive	**Compliant By Exemption**
REACh Regulation	**Free of Substances of Very High Concern above the threshold**
California proposition 65	**WARNING: This product can expose you to chemicals including: Nickel compounds, which is known to the State of California to cause cancer, and Di-isodecyl phthalate (DIDP), which is known to the State of California to cause birth defects or other reproductive harm. For more information go to www.P65Warnings.ca.gov**

Use Longer

Lifetime extension

Repair	**No**

Use Again

Repack and remanufacture

Recyclability potential, in %	**1**
Circularity Profile	**No need of specific recycling operations**
Take-back	**No**

Dimensions Drawings

Dimensions

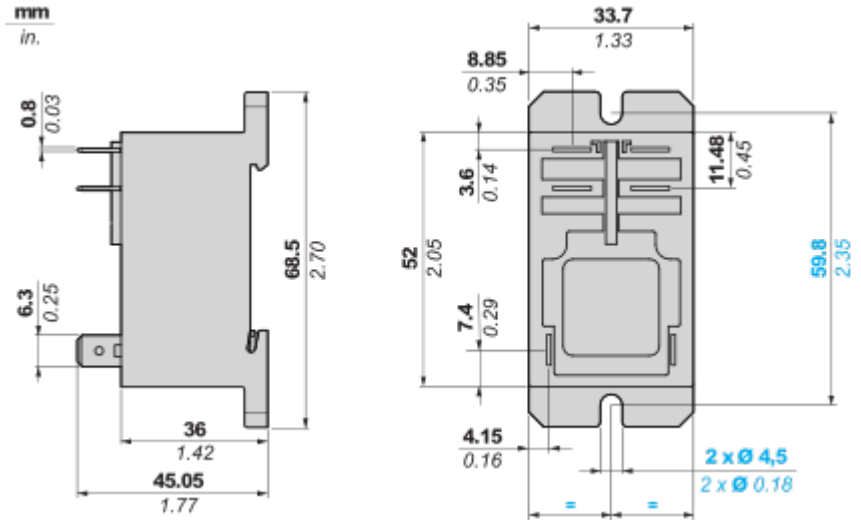

Connections and Schema

Wiring Diagram

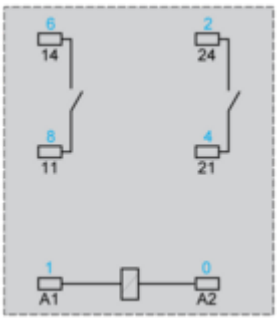

Symbols shown in blue correspond to Nema marking.

Performance Curves

Electrical Durability of Contacts

AC Resistive load

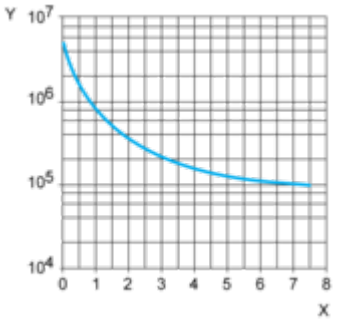

X Switching capacity (kVA)
Y Durability (number of operating cycles)

AC Reduction coefficient for inductive load (depending on power factor cos ϕ)

Durability (inductive load) = durability (resistive load) x reduction coefficient.

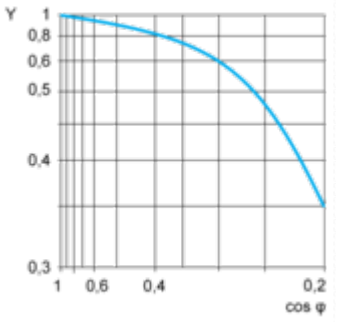

Y reduction coefficient

Maximum switching capacity on DC resistive load

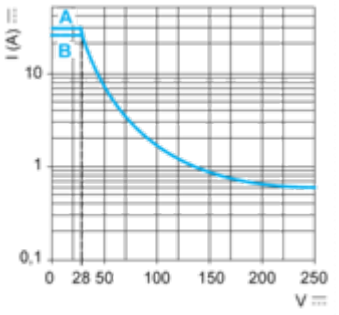

A 30 A
B 25 A
Note : These are typical curves, actual durability depends on load, environment, duty cycle, etc.

Technical Illustration

Dimensions

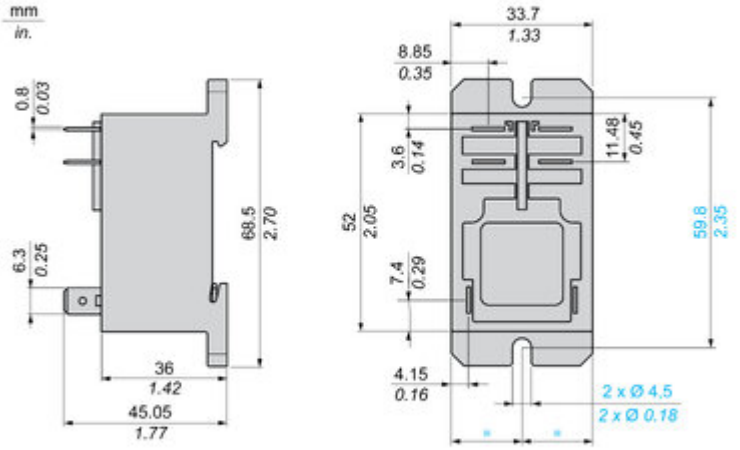

Image of product / Alternate images

Alternative

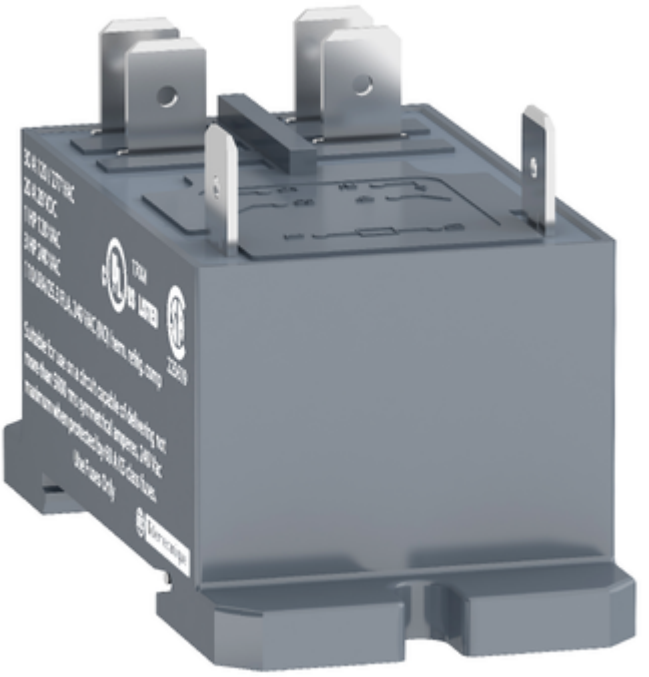



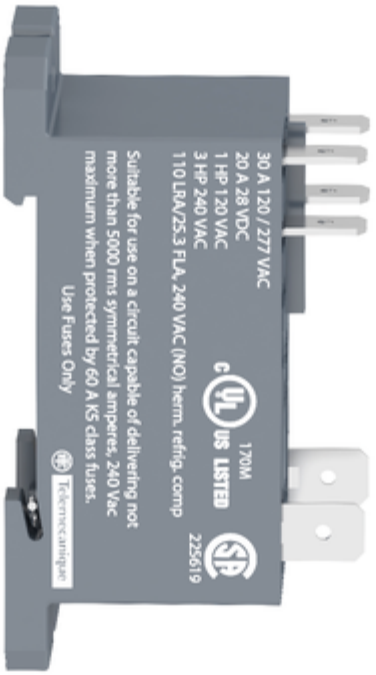
30 A 120 / 277 VAC
20 A 28 VDC
1 HP 120 VAC
3 HP 240 VAC
110 LRA/25.3 FLA, 240 VAC (NO) herm. refrig. comp
Suitable for use on a circuit capable of delivering not more than 5000 rms symmetrical amperes, 240 Vac maximum when protected by 60 A RK5 class fuses.
Use Fuses Only
170M
LISTED
2256619
Telemecanique







Image of product in real life situation

