Product data sheet

Specifications



passive connection sub-base ABE7 - 16 outputs - fuses - Led - isolator

ABE7H16F43

Main

Range of product	Modicon ABE7
Product or component type	Passive discrete I/O sub-base
Sub-base type	Output sub-base
[Us] rated supply voltage	19...30 V conforming to IEC 61131-2
Number of channels	16
Number of terminal per channel	2
Connections - terminals	Screw type terminals, 1 x 0.09...1 x 1.5 mm² (AWG 28...AWG 16) flexible with cable end Screw type terminals, 1 x 0.14...1 x 2.5 mm² (AWG 26...AWG 12) solid Screw type terminals, 1 x 0.14...1 x 2.5 mm² (AWG 26...AWG 14) flexible without cable end Screw type terminals, 2 x 0.09...2 x 0.75 mm² (AWG 28...AWG 20) flexible with cable end Screw type terminals, 2 x 0.2...2 x 2.5 mm² (AWG 24...AWG 14) solid
Channel additional information	1 switch disconnector per channel

Complementary

supply voltage type	DC
Number of horizontal rows	1
Status LED	1 LED per channel (green) channel status 1 LED per channel (red) blown fuse indication 1 LED (green) power ON
Polarity distribution	0 V
Short-circuit protection	2 A internal fuse, 5 x 20 mm, fast blow (PLC end) 0.125 A fuse per channel, 5 x 20 mm, fast blow (output circuit)
Connector type	HE-10
Pin number	20 pins
Fixing mode	By clips (35 mm symmetrical DIN rail) By screws (solid plate with fixing kit)
Maximum supply current	1.8 A
Current per channel	0.125 A
Maximum current per output common	1.8 A
Voltage drop on power supply fuse	0.3 V
Maximum voltage drop per channel	2 V
[Ui] rated insulation voltage	2000 V
Installation category	II conforming to IEC 60664-1

Disclaimer: This documentation is not intended as a substitute for and is not to be used for determining suitability or reliability of these products for specific user applications

Tightening torque	0.6 N.m with flat Ø 3.5 mm screwdriver
Width	206 mm
Net weight	0.64 kg

Environment

Product certifications	DNV GL UL CSA EAC
IP degree of protection	IP2X conforming to IEC 60529
Resistance to incandescent wire	750 °C conforming to IEC 60695-2-11
Shock resistance	15 gn for 11 ms conforming to IEC 60068-2-27
Vibration resistance	2 gn (f= 10…150 Hz) conforming to IEC 60068-2-6
Resistance to electrostatic discharge	4 kV (contact) level 3 conforming to IEC 61000-4-2 8 kV (air) level 3 conforming to IEC 61000-4-2
Resistance to radiated fields	10 V/m (26000000…1000000000 Hz) conforming to IEC 61000-4-3 level 3
Resistance to fast transients	2 kV level 3 conforming to IEC 61000-4-4
Ambient air temperature for operation	-5…60 °C conforming to IEC 61131-2
Ambient air temperature for storage	-40…80 °C conforming to IEC 61131-2
Pollution degree	2 conforming to IEC 60664-1

Packing Units

Unit Type of Package 1	PCE
Number of Units in Package 1	1
Package 1 Height	6.8 cm
Package 1 Width	8.3 cm
Package 1 Length	21.1 cm
Package 1 Weight	620.0 g
Unit Type of Package 2	S03
Number of Units in Package 2	16
Package 2 Height	30.0 cm
Package 2 Width	30.0 cm
Package 2 Length	40.0 cm
Package 2 Weight	10.418 kg

Contractual warranty

Warranty	18 months

Environmental Data

Schneider Electric aims to achieve Net Zero status by 2050 through supply chain partnerships, lower impact materials, and circularity via our ongoing “Use Better, Use Longer, Use Again” campaign to extend product lifetimes and recyclability.

Environmental Data explained >

How we assess product sustainability >

Environmental footprint

Total lifecycle Carbon footprint	1040
Environmental Disclosure	Product Environmental Profile

Use Better

Materials and Substances

Packaging made with recycled cardboard	No
Packaging without single use plastic	No
EU RoHS Directive	Pro-active compliance (Product out of EU RoHS legal scope)
SCIP Number	1bbe7d20-74c0-4e7e-b98b-d2946f4ab8b4
REACh Regulation	REACh Declaration
California proposition 65	WARNING: This product can expose you to chemicals including: Lead and lead compounds, which is known to the State of California to cause cancer and birth defects or other reproductive harm. For more information go to www.P65Warnings.ca.gov

Use Again

Repack and remanufacture

End of life manual availability	End of Life Information
Take-back	No
WEEE Label	The product must be disposed on European Union markets following specific waste collection and never end up in rubbish bins

Dimensions Drawings

Dimensions

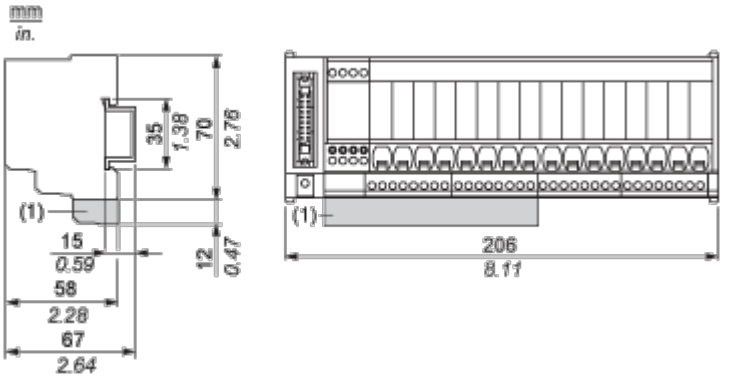

(1) ABE7BV10 / BV20, ABE7BV10E / BV20E

Mounting and Clearance

Mounting

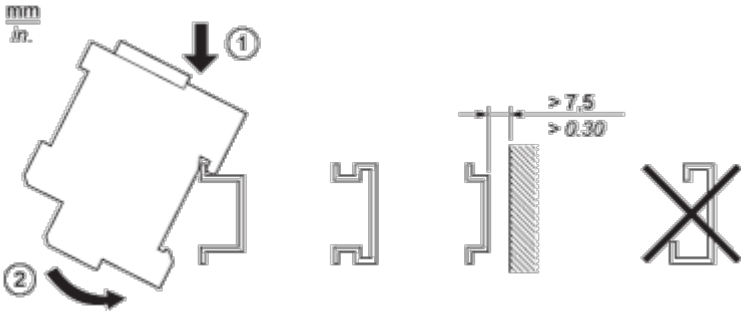

Connections and Schema

HE10 16 Channels

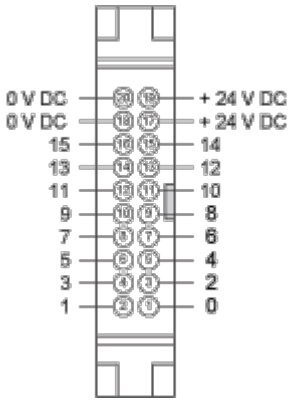

Wiring Diagram

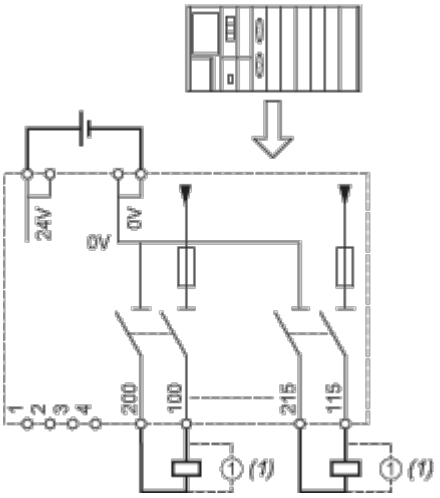

(1) Inductive load

Performance Curves

Curves for Determining Cable Type and Length According to the Current

16-channel Sub-base

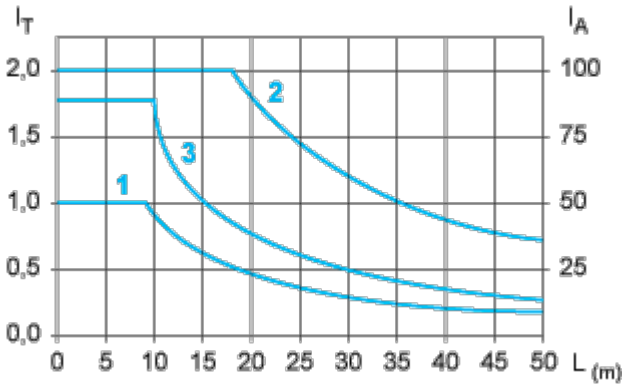

L Cable length

I_T Total current per sub base (A)

I_A Average current per channel (mA)

(1) TSXCDP••2 and ABFH20H••0 cables with c.s.a. 0.08 mm^2 (AWG 28).

(2) TSXCDP••3 cables with c.s.a. 0.34 mm^2 (AWG 22).

(3) Cables with c.s.a. 0.13 mm^2 (AWG 26).

The curves are given for a voltage drop of 1 V in the cable. For n volts tolerance, multiply the length determined from the graph by n.

Image of product / Alternate images

Alternative

