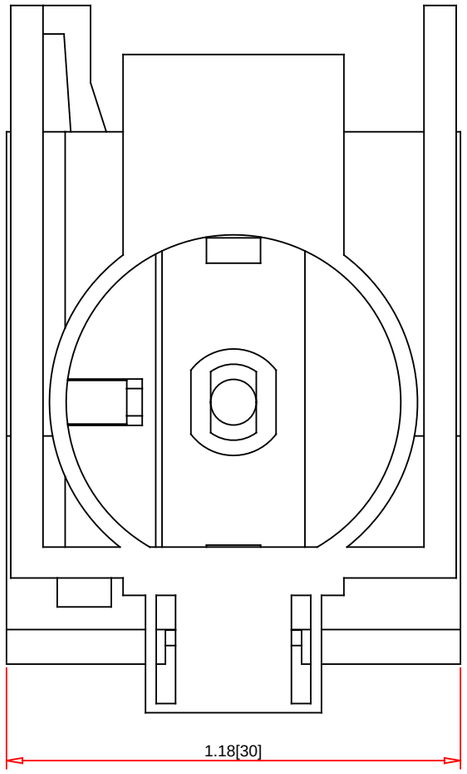


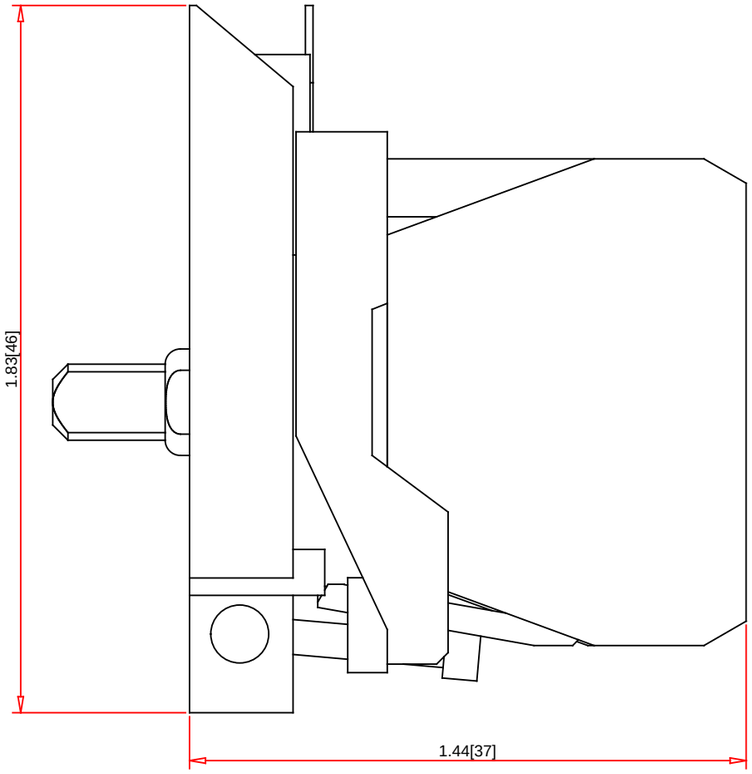


Note:
- Drawings Not To Scale
- Drawings Subject to Change Without Notice
- Dimensions are inches next to [Millimeters]

Part No.:

# ZB4BW0G33

Schneider Electric United States
North American Division
Boston One Campus
800 Federal Street
Andover, MA 01810, USA
Phone:+1 8773425173
Email: CCC@us.schneider-electric.com

## Technical Information:

| | |
|---|---|
| Tightening Torque: | 0.8 Nm |
| Light Module Electrical Consumption: | 24V = 18mA; 120/240V = 14mA |
| CE: | Yes |
| RoHS: | Yes |
| Contact Configuration: | 2 N.O. |
| Light Module Supply Voltage: | n/a |

## Specification:

| | |
|---|---|
| Description: | Base, Contact, & Light Module |
| Light Module Type: | LED (Green) |
| Light Module Voltage: | 110-120Vac |
| Ampere Rating: | 10A |
| Contact Material: | Silver Alloy |
| Terminal Type: | Screw Clamp |
| Utilization Category: | AC-15; DC-13 |
| Used On: | ZB4 Metal Operators |