# Product data sheet

Specifications



## Pendant control station, Harmony XAC, plastic, yellow, 4 push buttons with 1NO

XACA471

**Product availability: Stock - Normally stocked in distribution facility**

## Main

| | |
|---|---|
| **Range of Product** | Harmony XAC |
| **Product or Component Type** | Pendant control station |
| **Device short name** | XACA |

## Complementary

| | |
|---|---|
| **Control station type** | Double insulated |
| **Enclosure Material** | Polypropylene |
| **Electrical circuit type** | Control circuit |
| **Enclosure Type** | Complete ready for use |
| **Control station application** | Control of single speed hoist motor |
| **Control station composition** | 4 push-buttons |
| **Control button type** | First push-button 1 NO raise, slow<br>Second push-button 1 NO lower, slow<br>Fourth push-button 1 NO left, slow<br>Third push-button 1 NO right, slow |
| **Product compatibility** | ZB2BE101 for each direction |
| **Mechanical interlocking** | With mechanical interlocking between pairs |
| **Control station colour** | Yellow |
| **Connections - terminals** | Screw clamp terminals, 1 x 0.5...1 x 2.5 mm² without cable end<br>Screw clamp terminals, 1 x 0.5...2 x 1.5 mm² with cable end |
| **Standards** | CSA C22.2 No 14<br>IEC 60204-32<br>UL 508<br>IEC 60947-5-1 |
| **Product Certifications** | CCC<br>GOST |
| **Protective treatment** | TH |
| **Ambient Air Temperature for Operation** | -13…158 °F (-25…70 °C) |
| **Ambient Air Temperature for Storage** | -40…158 °F (-40…70 °C) |
| **Vibration resistance** | 15 gn (f= 10…500 Hz) conforming to IEC 60068-2-6 |
| **Shock resistance** | 100 gn IEC 60068-2-27 |
| **Overvoltage category** | Class II conforming to IEC 61140 |
| **IP degree of protection** | IP65 conforming to IEC 60529 |
| **IK degree of protection** | IK08 conforming to IEC 62262 |
| **Mechanical durability** | 1000000 cycles |

Price is “List Price” and may be subject to a trade discount – check with your local distributor or retailer for actual price.

Disclaimer: This documentation is not intended as a substitute for and is not to be used for determining suitability or reliability of these products for specific user applications

| | |
|---|---|
| **Cable entry** | Rubber sleeve with stepped entry 0.3…1.02 in (8…26 mm) |
| **Contact code designation** | A600 AC-15, Ue = 240 V, Ie = 3 A IEC 60947-5-1 appendix A<br>A600 AC-15, Ue = 600 V, Ie = 1.2 A IEC 60947-5-1 appendix A<br>Q600 DC-13, Ue = 250 V, Ie = 0.27 A IEC 60947-5-1 appendix A<br>Q600 DC-13, Ue = 600 V, Ie = 0.1 A IEC 60947-5-1 appendix A |
| **[Ithe] conventional enclosed thermal current** | 10 A |
| **[Ui] rated insulation voltage** | 600 V 3) |
| **[Uimp] rated impulse withstand voltage** | 6 kV IEC 60947-1 |
| **Contact operation** | Slow-break |
| **Maximum resistance across terminals** | 25 MOhm |
| **Operating force** | 10 N push-button |
| **Short-circuit protection** | 10 A fuse protection cartridge gG |
| **Rated operational power in W** | 40 W DC-13 1000000 cycles 60 cyc/mn 120 V 0.5 inductive IEC 60947-5-1 appendix C<br>48 W DC-13 1000000 cycles 60 cyc/mn 48 V 0.5 inductive IEC 60947-5-1 appendix C<br>65 W DC-13 1000000 cycles 60 cyc/mn 24 V 0.5 inductive IEC 60947-5-1 appendix C |
| **Terminals description ISO n°1** | (13-14)NO |
| **Terminal identifier** | (13-14)NO<br>(11-12)NC |
| **Product Weight** | 1.378 lb(US) (0.625 kg) |

## Ordering and shipping details

| | |
|---|---|
| **Category** | US10CS222473 |
| **Discount Schedule** | 0CS2 |
| **GTIN** | 3389110645101 |
| **Returnability** | Yes |
| **Country of origin** | CZ |

## Packing Units

| | |
|---|---|
| **Unit Type of Package 1** | PCE |
| **Nbr. of units in pkg.** | 1 |
| **Package 1 Height** | 3.543 in (9.000 cm) |
| **Package 1 Width** | 3.622 in (9.200 cm) |
| **Package 1 Length** | 18.110 in (46.000 cm) |
| **Package weight(Lbs)** | 25.115 oz (712.000 g) |
| **Unit Type of Package 2** | S06 |
| **Number of Units in Package 2** | 48 |
| **Package 2 Height** | 29.528 in (75.000 cm) |
| **Package 2 Width** | 23.622 in (60.000 cm) |
| **Package 2 Length** | 31.496 in (80.000 cm) |
| **Package 2 Weight** | 105.169 lb(US) (47.704 kg) |

## Contractual warranty

| | |
|---|---|
| **Warranty (in months)** | 18 |

## Environmental Data

Schneider Electric aims to achieve Net Zero status by 2050 through supply chain partnerships, lower impact materials, and circularity via our ongoing “Use Better, Use Longer, Use Again” campaign to extend product lifetimes and recyclability.

Environmental Data explained >

How we assess product sustainability >

### Environmental footprint

| | |
|---|---|
| Total lifecycle Carbon footprint | **4 kg CO2 eq.** |
| Carbon footprint of the manufacturing phase [A1 to A3] | **3 kg CO2 eq.** |
| Carbon footprint of the distribution phase [A4] | **0.1 kg CO2 eq.** |
| Carbon footprint of the installation phase [A5] | **0 kg CO2 eq.** |
| Carbon footprint of the use phase [B2, B3, B4, B6] | **0 kg CO2 eq.** |
| Carbon footprint of the end-of-life phase [C1 to C4] | **0.6 kg CO2 eq.** |
| Environmental Disclosure | **Product Environmental Profile** |

## Use Better

### Materials and Substances

| | |
|---|---|
| Packaging made with recycled cardboard | **Yes** |
| Packaging without single use plastic | **Yes** |
| EU RoHS Directive | **Compliant** |
| REACh Regulation | **Free of Substances of Very High Concern above the threshold** |
| California proposition 65 | **WARNING: This product can expose you to chemicals including: Nickel compounds, which is known to the State of California to cause cancer, and Di-isodecyl phthalate (DIDP), which is known to the State of California to cause birth defects or other reproductive harm. For more information go to www.P65Warnings.ca.gov** |

## Use Longer

### Lifetime extension

| | |
|---|---|
| Repair | **No** |

## Use Again

### Repack and remanufacture

| | |
|---|---|
| Recyclability potential, in % | **32** |
| Circularity Profile | **No need of specific recycling operations** |
| Take-back | **No** |
| WEEE Label | **The product must be disposed on European Union markets following specific waste collection and never end up in rubbish bins.** |

## Dimensions Drawings

### Dimensions

Below drawing shows a product with 6 cut-outs. Select the number of cut-outs according to the product characteristics in order to get b, b1 and c dimensions.

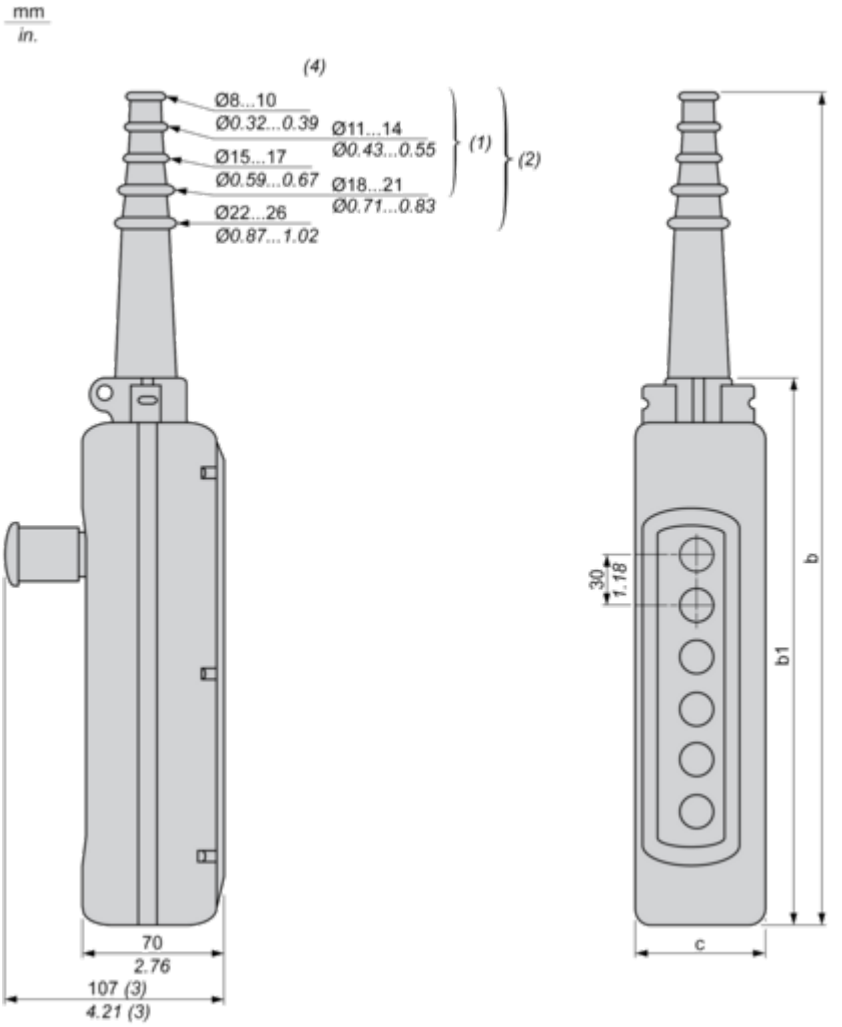


**(1)** For 2 and 3-way XAC A stations.
**(2)** For 4 to 8-way XAC A stations.
**(3)** With trigger action Emergency stop head operator
**(4)** Internal ø

**Dimensions in mm**

| Number of cut-outs | 2 | 3 | 4 | 5 | 6 | 8 | 12 |
|---|---|---|---|---|---|---|---|
| b | 314 | 314 | 440 | 440 | 500 | 560 | 680 |
| b1 | 190 | 190 | 250 | 250 | 310 | 370 | 490 |
| c | 80 | 80 | 80 | 80 | 80 | 80 | 92 |

**Dimensions in in.**

| Number of cut-outs | 2 | 3 | 4 | 5 | 6 | 8 | 12 |
|---|---|---|---|---|---|---|---|
| b | 12.36 | 12.36 | 17.32 | 17.32 | 19.68 | 22.05 | 26.77 |
| b1 | 7.48 | 7.48 | 9.84 | 9.84 | 12.20 | 14.57 | 19.29 |

| Number of cut-outs | 2 | 3 | 4 | 5 | 6 | 8 | 12 |
|---|---|---|---|---|---|---|---|
| c | 3.15 | 3.15 | 3.15 | 3.15 | 3.15 | 3.15 | 3.62 |

## Connections and Schema

### Control of Single-Speed Reversing Motor

With ZBE2BE101 + ZB2BE102 contacts blocks, to be ordered separately

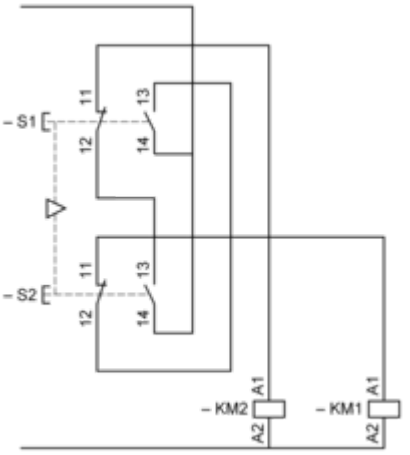

## Performance Curves

### Rated Operational Power

#### AC Supply 50/60 Hz Inductive Circuit

Operating rate: 3600 operating cycles/hour. Load factor: 0.5.
**Millions of operating cycles, AC-15 utilization category**

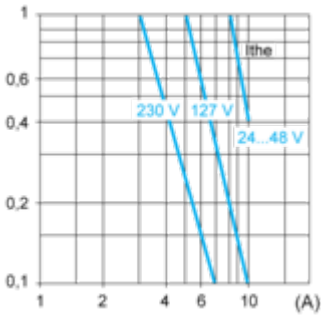


**Ithe** Thermal current
**(A)** Current

#### DC Supply

Operating rate: 3600 operating cycles/hour. Load factor: 0.5.
**Power broken in W for 1 million operating cycles, DC-13 utilization category**

| Voltage | V | 24 | 48 | 120 |
|---|---|---|---|---|
| Inductive circuit | W | 65 | 48 | 40 |

Technical Illustration

## Dimensions

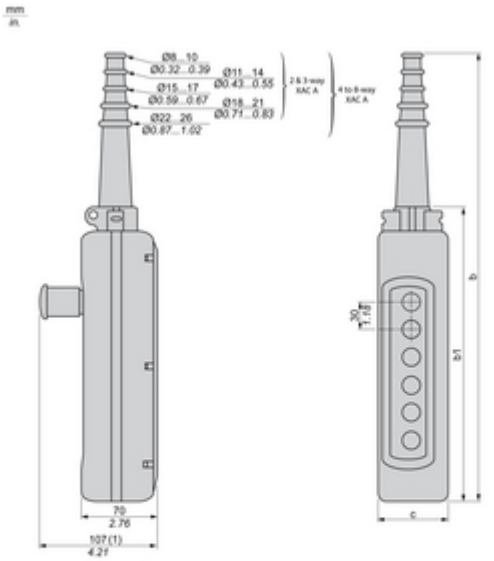


(1) With trigger action Emergency stop head operator

| Number of cut-outs | | | | | | | | |
|---|---|---|---|---|---|---|---|---|
| | | 2 | 3 | 4 | 5 | 6 | 8 | 12 |
| b | mm | 314 | 314 | 440 | 440 | 500 | 560 | 580 |
| | inch. | 12.36 | 12.36 | 17.32 | 17.32 | 19.68 | 22.05 | 26.77 |
| b1 | mm | 190 | 190 | 250 | 250 | 310 | 370 | 490 |
| | inch. | 7.48 | 7.48 | 9.84 | 9.84 | 12.2 | 14.57 | 19.29 |
| c | mm | 80 | 80 | 80 | 80 | 80 | 80 | 92 |
| | inch. | 3.15 | 3.15 | 3.15 | 3.15 | 3.15 | 3.15 | 3.62 |

Technical Illustration

**Wiring diagram**

**Control of Single-Speed Reversing Motor With ZBE2BE101 + ZB2BE102**

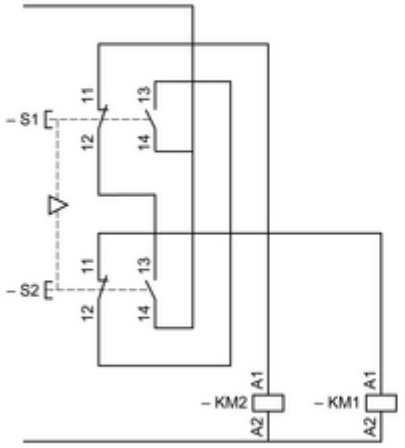

Image of product / Alternate images

**Alternative**







