Product data sheet
Characteristics

ATV340D15N4S
Variable speed drive, Altivar Machine ATV340, 15 kW Heavy Duty, 400 V, 3 phases, Sercos



Main

Range of Product	Altivar Machine ATV340
Product or Component Type	Variable speed drive
Product Specific Application	Machine
Variant	Standard version
Mounting Mode	Cabinet mount
Communication Port Protocol	Sercos Modbus serial
Phase	3 phase
Supply frequency	50...60 Hz +/- 5 %
[Us] rated supply voltage	380...480 V - 15...10 %
Nominal output current	32.0 A
Motor power kW	18.5 KW normal duty 15 kW heavy duty
Maximum Horse Power Rating	25 Hp normal duty 20 hp heavy duty
EMC filter	Class C3 EMC filter integrated
IP degree of protection	IP20

Complementary

Discrete input number	5
Discrete input type	PTI safe torque off 0…30 kHz, 24 V DC 30 V) DI1...DI5 discrete input, 24 V DC 30 V)3.5 kOhm
Number of preset speeds	16 preset speeds
Discrete output number	2.0
Discrete output type	Programmable output DQ1, DQ2 30 V DC 100 mA
Analogue input number	2
Analogue input type	AI1 software-configurable current 0...20 mA 250 Ohm 12 bits AI1 software-configurable temperature probe or water level sensor AI1 software-configurable voltage 0...10 V DC 31.5 kOhm 12 bits AI2 software-configurable voltage - 10...10 V DC 31.5 kOhm 12 bits
Analogue output number	2
Analogue output type	Software-configurable voltage AQ1 0...10 V DC 470 Ohm 10 bits Software-configurable current AQ1 0...20 mA 500 Ohm 10 bits
Relay output number	2
Output voltage	<= power supply voltage
Relay output type	Relay outputs R1A Relay outputs R1C 100000 cycles Relay outputs R2A Relay outputs R2C 100000 cycles
Maximum switching current	Relay output R1C resistive, cos phi = 1 3 A 250 V AC Relay output R1C resistive, cos phi = 1 3 A 30 V DC Relay output R1C inductive, cos phi = 0.4 7 ms 2 A 250 V AC Relay output R1C inductive, cos phi = 0.4 7 ms 2 A 30 V DC Relay output R2C resistive, cos phi = 1 5 A 250 V AC Relay output R2C resistive, cos phi = 1 5 A 30 V DC Relay output R2C inductive, cos phi = 0.4 7 ms 2 A 250 V AC Relay output R2C inductive, cos phi = 0.4 7 ms 2 A 30 V DC
Minimum switching current	Relay output R1B 5 mA 24 V DC Relay output R2C 5 mA 24 V DC
Physical interface	2-wire RS 485

The information provided in this documentation contains general descriptions and/or technical characteristics of the performance of the products contained herein.
This documentation is not intended as a substitute for and is not to be used for determining suitability or reliability of these products for specific user applications.
It is the duty of any such user or integrator to perform the appropriate and complete risk analysis, evaluation and testing of the products with respect to the relevant specific application or use thereof.
Neither Schneider Electric Industries SAS nor any of its affiliates or subsidiaries shall be responsible or liable for misuse of the information contained herein.

Connector Type	3 RJ45
Method of access	Slave Modbus RTU
Transmission Rate	4.8 kbit/s 9.6 kbit/s 19.2 kbit/s 38.4 kbit/s
Transmission frame	RTU
Number of addresses	1…247
Data format	8 bits, configurable odd, even or no parity
Type of polarization	No impedance
4 quadrant operation possible	True
Asynchronous motor control profile	Variable torque standard Optimized torque mode Constant torque standard
Synchronous motor control profile	Reluctance motor Permanent magnet motor
Pollution degree	2 EN/IEC 61800-5-1
Maximum output frequency	0.599 kHz
Acceleration and deceleration ramps	Linear adjustable separately from 0.01...9999 s S, U or customized
Motor slip compensation	Automatic whatever the load Adjustable Not available in permanent magnet motor law Can be suppressed
Switching frequency	2...16 kHz adjustable 7...16 kHz with derating factor
Nominal switching frequency	4 kHz
Braking to standstill	By DC injection
Brake chopper integrated	True
Line current	37.4 A 380 V normal duty) 30.2 A 480 V normal duty) 44.9 A 380 V heavy duty) 35.7 A 480 V heavy duty)
Line current	44.9 A 380 V without line choke heavy duty) 35.7 A 480 V without line choke heavy duty) 37.4 A 380 V with external line choke normal duty) 30.2 A 480 V with external line choke normal duty) 28.7 A 380 V with external line choke heavy duty) 23 A 480 V with external line choke heavy duty)
Maximum Input Current per Phase	44.9 A
Maximum output voltage	480 V
Apparent power	28.3 KVA 480 V normal duty) 29.7 kVA 480 V heavy duty)
Maximum transient current	42.9 A 60 s normal duty) 48 A 60 s heavy duty) 52.7 A 2 s normal duty) 58 A 2 s heavy duty)
Electrical connection	Screw terminal 0.2...2.5 mm² control Screw terminal 6...25 mm² line side Screw terminal 6...25 mm² DC bus Screw terminal 4...25 mm² motor
Prospective line Isc	22 kA
Base load current at high overload	32.0 A
Base load current at low overload	39.0 A
Power dissipation in W	Natural convection 18 W 380 V 4 kHz heavy duty) Forced convection 346 W 380 V 4 kHz heavy duty) Natural convection 21 W 380 V 4 kHz normal duty) Forced convection 411 W 380 V 4 kHz normal duty)
Electrical connection	Control screw terminal 0.2...2.5 mm² AWG 24...AWG 12 Line side screw terminal 6...25 mm² AWG 8...AWG 3 DC bus screw terminal 6...25 mm² AWG 8...AWG 3 Motor screw terminal 4...25 mm² AWG 10...AWG 3
With safety function Safely Limited Speed (SLS)	True
With safety function Safe brake management (SBC/ SBT)	True
With safety function Safe Operating Stop (SOS)	False

With safety function Safe Position (SP)	False
With safety function Safe programmable logic	False
With safety function Safe Speed Monitor (SSM)	False
With safety function Safe Stop 1 (SS1)	True
With sft fct Safe Stop 2 (SS2)	False
With safety function Safe torque off (STO)	True
With safety function Safely Limited Position (SLP)	False
With safety function Safe Direction (SDI)	False
Protection type	Thermal protection motor Safe torque off motor Motor phase loss motor Thermal protection drive Safe torque off drive Overheating drive Overcurrent drive Output overcurrent between motor phase and earth drive Output overcurrent between motor phases drive Short-circuit between motor phase and earth drive Short-circuit between motor phases drive Motor phase loss drive DC Bus overvoltage drive Line supply overvoltage drive Line supply undervoltage drive Input supply loss drive Exceeding limit speed drive Break on the control circuit drive
Width	7.09 in (180.0 mm)
Height	15.16 in (385.0 mm)
Depth	9.80 in (249.0 mm)
Net Weight	20.94 lb(US) (9.5 kg)
Continuous output current	39 A 4 kHz normal duty 32 A 4 kHz heavy duty

Environment

Operating altitude	<= 9842.52 ft (3000 m) with current derating above 1000m
Operating position	Vertical +/- 10 degree
Product Certifications	UL CSA TÜV EAC CTick
Marking	CE
Standards	EN/IEC 61800-3 EN/IEC 61800-5-1 IEC 60721-3 IEC 61508 IEC 13849-1 UL 618000-5-1 UL 508C
Assembly style	With heat sink
Electromagnetic compatibility	Electrostatic discharge immunity test level 3 IEC 61000-4-2 Radiated radio-frequency electromagnetic field immunity test level 3 IEC 61000-4-3 Electrical fast transient/burst immunity test level 4 IEC 61000-4-4 1.2/50 µs - 8/20 µs surge immunity test level 3 IEC 61000-4-5 Conducted radio-frequency immunity test level 3 IEC 61000-4-6
Environmental class (during operation)	Class 3C3 according to IEC 60721-3-3 Class 3S3 according to IEC 60721-3-3
Maximum acceleration under shock impact (during operation)	70 m/s² at 22 ms
Maximum acceleration under vibrational stress (during operation)	5 m/s² at 9...200 Hz
Maximum deflection under vibratory load (during operation)	1.5 mm at 2...9 Hz
Permitted relative humidity (during operation)	Class 3K5 according to EN 60721-3
Volume of cooling air	33814.63 Gal/hr(US) (128.0 m3/h)
Type of cooling	Forced convection

Overvoltage category	Class III
Regulation loop	Adjustable PID regulator
Noise level	55.6 dB
Pollution degree	2
Ambient air transport temperature	-40…158 °F (-40…70 °C)
Ambient air temperature for operation	5…122 °F (-15…50 °C) without derating vertical position) 122…140 °F (50…60 °C) with derating factor vertical position)
Ambient Air Temperature for Storage	-13…158 °F (-25…70 °C)
Isolation	Between power and control terminals

Ordering and shipping details

Category	22182-ATV340 (1 THRU 25 HP)
Discount Schedule	CP4B
GTIN	3606489497897
Returnability	No

Packing Units

Unit Type of Package 1	PCE
Number of Units in Package 1	1
Package 1 Height	13.39 in (34.0 cm)
Package 1 Width	11.81 in (30.0 cm)
Package 1 Length	22.05 in (56.0 cm)
Package 1 Weight	25.08 lb(US) (11.378 kg)

Offer Sustainability

Sustainable offer status	Green Premium product
California proposition 65	WARNING: This product can expose you to chemicals including: Lead and lead compounds, which is known to the State of California to cause cancer and birth defects or other reproductive harm. For more information go to www.P65Warnings.ca.gov
REACh Regulation	REACh Declaration
EU RoHS Directive	Pro-active compliance (Product out of EU RoHS legal scope) EU RoHS Declaration
Mercury free	Yes
China RoHS Regulation	China RoHS Declaration
RoHS exemption information	Yes
Environmental Disclosure	Product Environmental Profile
Circularity Profile	End Of Life Information
WEEE	The product must be disposed on European Union markets following specific waste collection and never end up in rubbish bins.
PVC free	Yes

Dimensions

Views: Front - Left - Rear

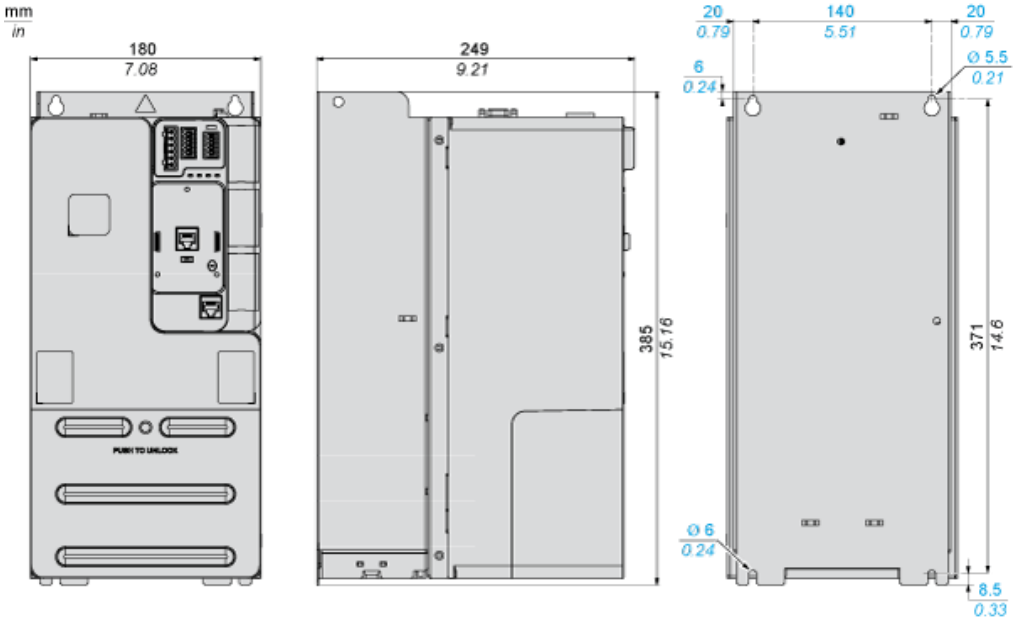

Clearance

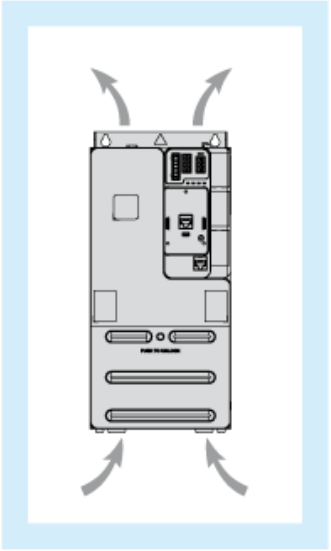

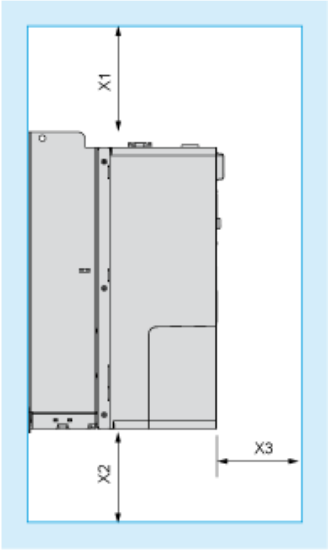

Dimensions in mm

X1	X2	X3
≥ 100	≥ 100	≥ 60

Dimensions in in.

X1	X2	X3
≥ 3.94	≥ 3.94	≥ 2.36

Mounting Types

Mounting Type A: Side by Side IP20

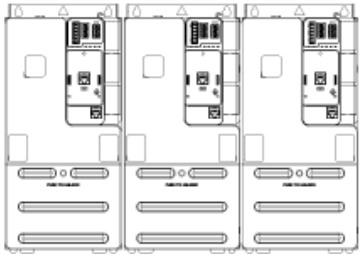

Possible, at ambient temperature ≤ 50 °C (122 °F)

Mounting Type B: Individual IP20

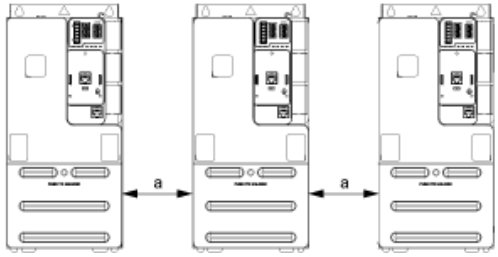

a ≥ 50 mm (1.97 in.) from 50...60°C, no restriction below 50°C

Connections and Schema

Three-phase Power Supply with Upstream Breaking via Line Contactor Without Safety Function STO

Connection diagrams conforming to standards ISO13849 category 1 and IEC/EN 61508 capacity SIL1, stopping category 0 in accordance with standard IEC/EN 60204-1.

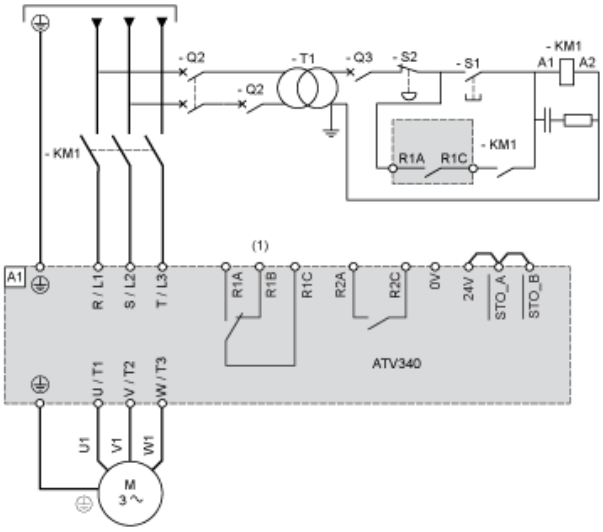

(1) Use relay output R1 set to operating state Fault to switch Off the product once an error is detected.
A1 : Drive
KM1 : Line Contactor
Q2, Q3 : Circuit breakers
S1 : Pushbutton
S2 : Emergency stop
T1 : Transformer for control part

Three-phase Power Supply With Downstream Breaking via Switch Disconnector

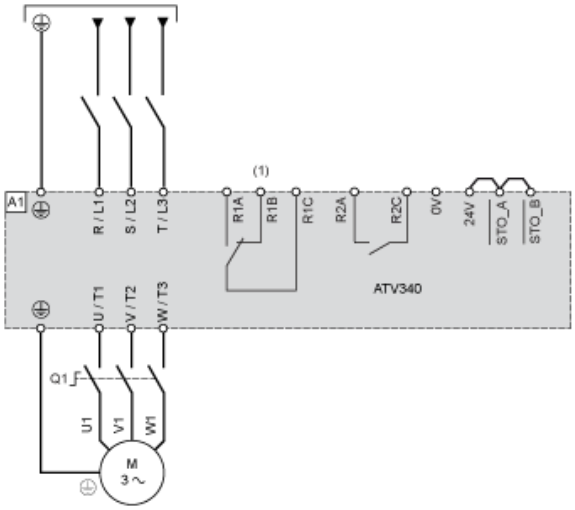

(1) Use relay output R1 set to operating state Fault to switch Off the product once an error is detected.
A1 : Drive
Q1 : Switch disconnector

Sensor Connection

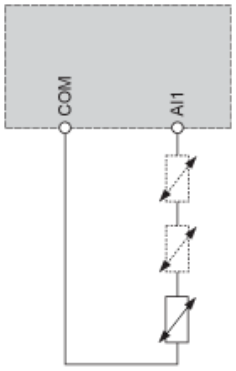

It is possible to connect either 1 or 3 sensors on terminals AI1.

Control Block Wiring Diagram

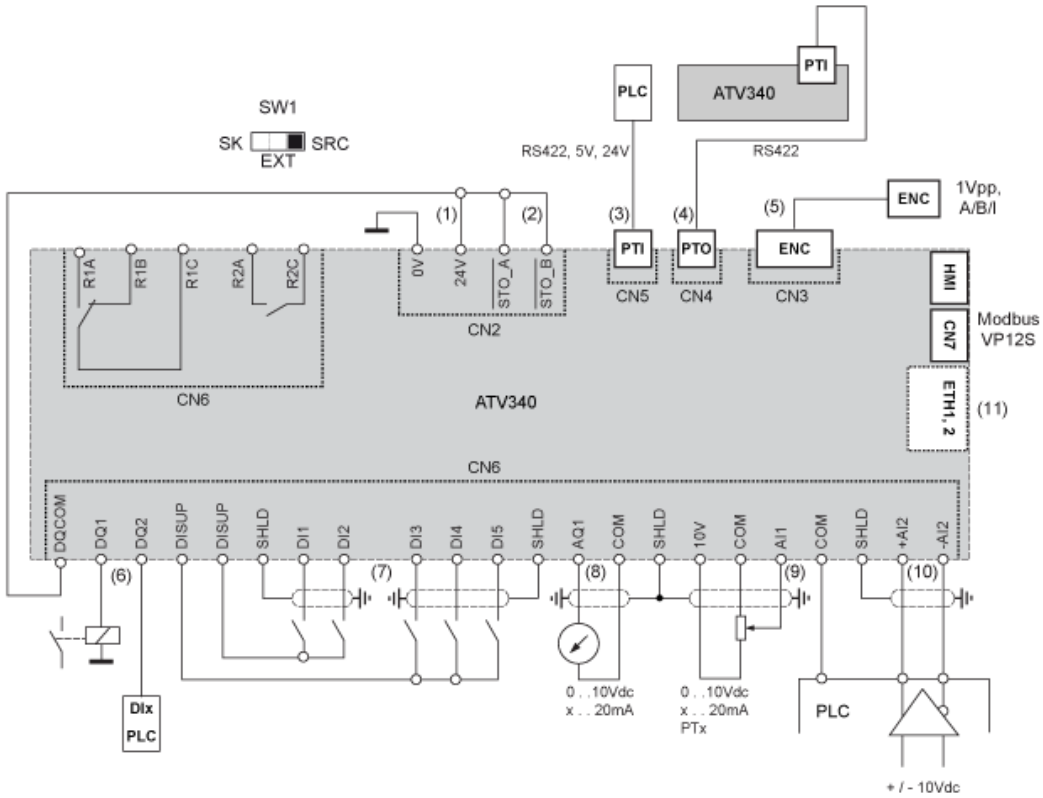

(1) 24V supply (STO)
(2) STO - Safe Torque Off
(3) PTI - Pulse Train In
(4) PTO - Pulse Train Out
(5) Motor Encoder connection
(6) Digital outputs
(7) Digital inputs
(8) Analog output
(9) Analog input
(10) Differential Analog Input
(11) Ethernet port (only on Ethernet drive version)
SW1 Sink/Source switch
R1A, Fault relay
R1B,
R1C :
R2A, Sequence relay
R2C :

Digital Inputs Wiring

Life Is On Schneider Electric

Digital Inputs: Internal Supply

Using DISUP Signal

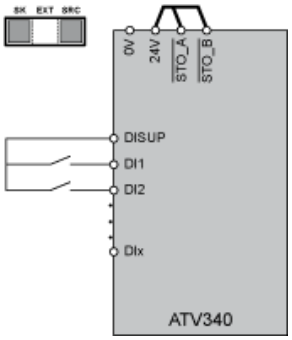

In SRC position DISUP outputs 24 V. In SK position DISUP is connected to 0 V.

Digital Inputs: External Supply

Positive Logic, Source, European Style

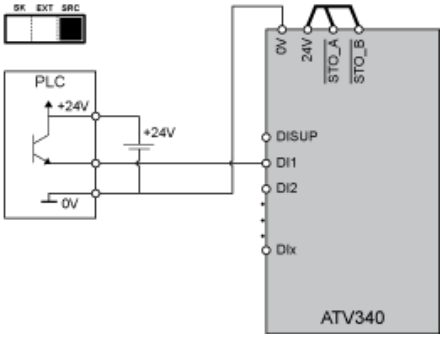

Negative Logic, Sink, Asian Style

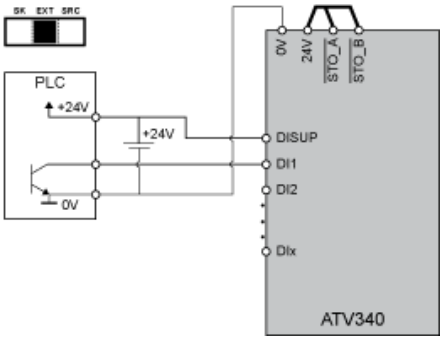

Digital Inputs: Internal supply

Negative Logic, Sink, Asian Style

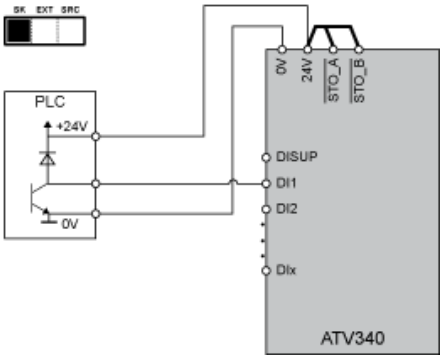

Digital Outputs Wiring

Digital Outputs: Internal Supply

Positive Logic, Source, European Style, DQCOM to +24V

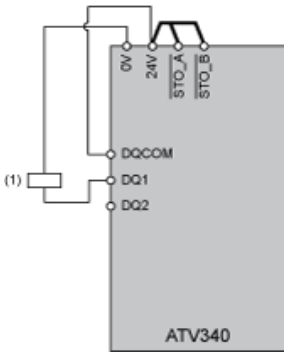

(1) Relay or valve

Negative Logic, Sink, Asian Style, DQCOM to 0V

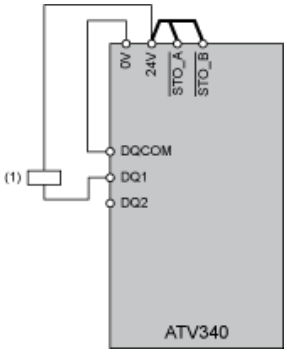

(1) Relay or valve

Digital Outputs: External Supply

Positive Logic, Source, European Style, DQCOM to +24V

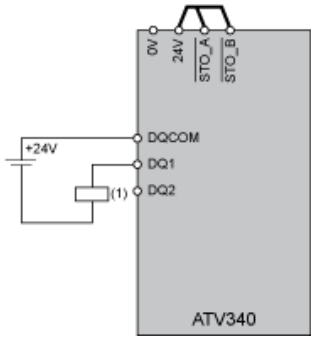

(1) Relay or valve

Negative Logic, Sink, Asian Style, DQCOM to 0V

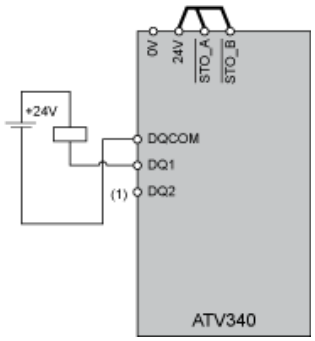

(1) Relay or valve

Derating Curves

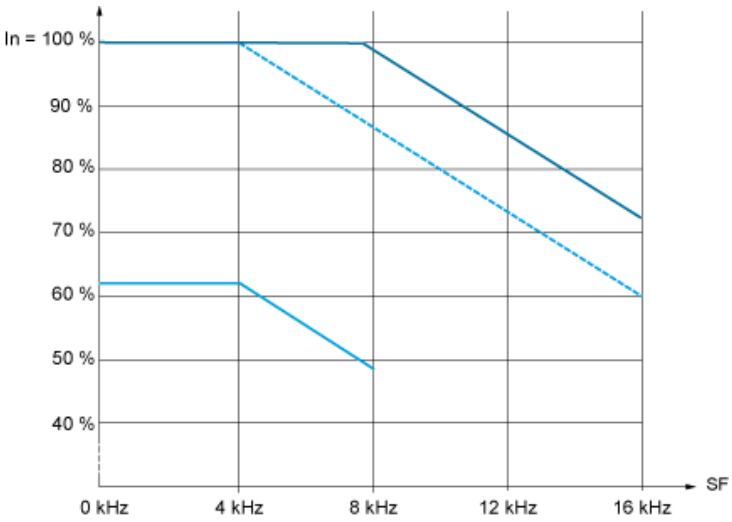

40 °C (104 °F) - Mounting type A and B
50 °C (122 °F) - Mounting type B
60 °C (140 °F) - Mounting type B
In : Nominal Drive Current
SF : Switching Frequency