Series 15600 ATC® Blade-Type Fuse Panels



The 15600 ATC® fuse panel is a compact, yet rugged, power distribution module. It is available in a single or dual internal buss electrical configuration featuring an optional ground pad terminal strip. The 15600 fuse panel is surface mounted, uses convenient quick-connect terminals, and is recommended as a supplemental power distribution module. It can be used to accompany main PDMs such as the Cooper Bussmann 31000/32000 Series VEC/DVEC, 15710 Series RTA, and the 1540X Series RFRM.

Specifications

Input Terminal Rating: #10-32 Threaded studs (100A max).
Output Terminal Rating: 30A Max per circuit.
Temperature Rating: –20°F (0°C) to 150°F (65°C).
Materials: Black thermoplastic.
Termination: .250" x .032" quick-connect terminals. Ground terminal pad option available. Input wire size: #4-6 AWG. Output wire size: #12-16 AWG.
Torque Rating: 20 in-lbs (2.25N•m) max.
Mounting Torque Rating: 8 in-lbs (0.9N•m) max.

Options

Positions: 4-20 circuits available.
Split Power: Single or dual buss options.

Dimensions - mm(in)

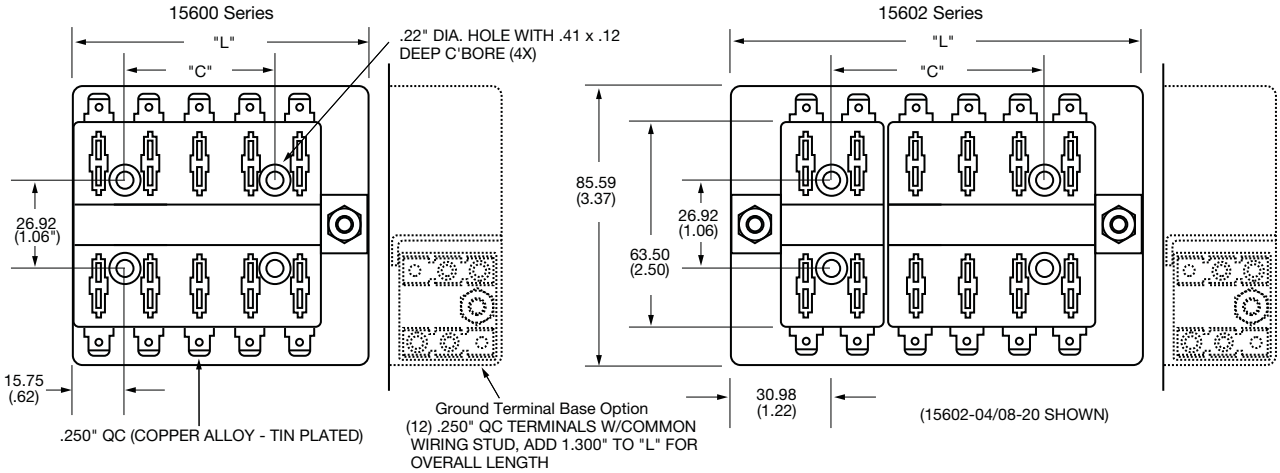

No. of Fuse	"C"	15600 "L"	15602 "L"	No. of Fuses	"C"	15600 "L"	15602 "L"
04	–	1.84	2.44	14	3.12	4.97	5.56
06	.62	2.47	3.06	16	3.76	5.59	6.19
08	1.25	3.09	3.68	18	4.37	6.22	6.81
10	1.87	3.75	4.32	20	5.00	6.84	7.43
12	2.50	4.34	4.94				

Dimensions in inches. Multiply by 25.4 for metric.

Part Numbering System

Series		No. of Fuses &/or Circuit Breaker Positions	Hardware Options	Ground Terminal Base
1560	0 –	❑❑ –	❑ –	❑
		04-20		
	2 –	❑❑ – ❑❑ –	❑	❑
		Left Side 04-16 / Right Side 04-16 (max. combination of 20)		
			0 – W/O nuts 1 – Nuts shipped bulk 2 – Nuts assembled	0 – None 1 – Include Ground Pad

0 – Single Stud, Single Supply Circuit
2 – Double Stud, Split Supply Circuits