Four-pole high SCCR UL Type 2 surge protective devices for three-phase Highleg Delta and Wye systems

RoHS





Remote contact signaling available

*easy*ID™ local visual status indication

Catalog symbols:

- BSPM4___WYNG
- BSPM3___WYNGR
- BSPM3___HLG
- BSPM3___HLGR

Description:

Eaton Bussmann™ series four-pole UL modular surge arresters feature *easy*ID™ local visual indication and optional remote contact signaling for system monitoring.

The unique module locking system fixes the protection modules to the base and they can be easily replaced without tools by simply depressing the release buttons.

Integrated mechanical coding between the base and protection module ensures against installing an incorrect replacement.

Standard local visual indication

The green and red visual indicator flags show the module protective status (green = good, red = replace).

Optional remote contact signaling

The three-pole terminal remote contact signaling option has a floating changeover contact for use as a break or make contact, according to circuit concept.

Specifications:

System volts

- 120/208Vac
- 127/220Vac
- 277/480Vac
- 347/600Vac
- 120/240Vac
- 240/480Vac

Short-Circuit Current Rating (SCCR)

- Up to 200kA

Systems types

- Three-phase Wye, 4 wire + ground
- Three-phase highleg Delta, 4 wire + ground

Agency information

- UL® Recognized 1449 4th Edition, Type 2 Component Assembly
- Vibration and shock tested per EN 60068-2
- CE
- RoHS compliant

Mounting

- 35mm DIN-Rail

Warranty

- Five years

Powering Business Worldwide

Dimensions - mm:

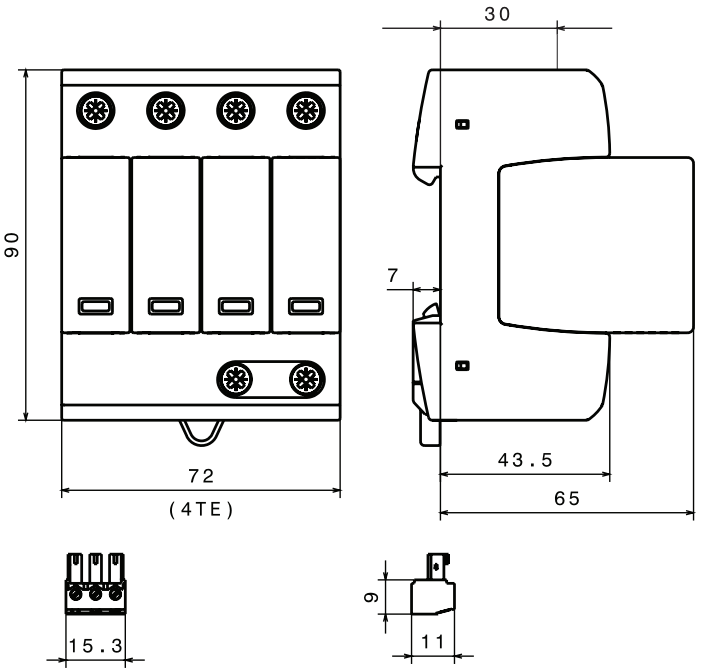

Shown with optional remote contact signaling.

Module circuit diagrams:

Shown with optional remote contact signaling

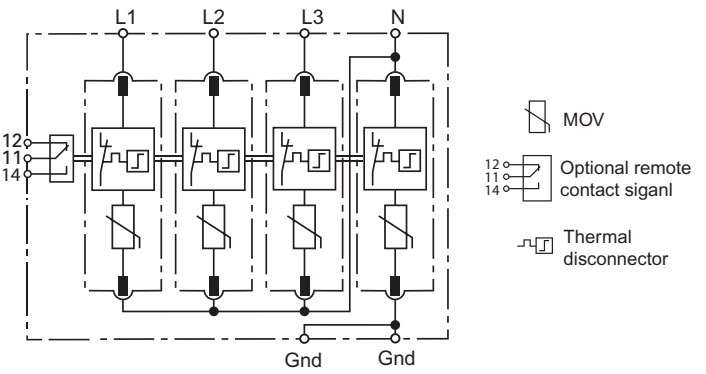

BSPM4208WYNG
BSPM4480WYNG
BSPM4600WYNG
BSPM4240HLG
BSPM4480HLG

Typical installation/system application:

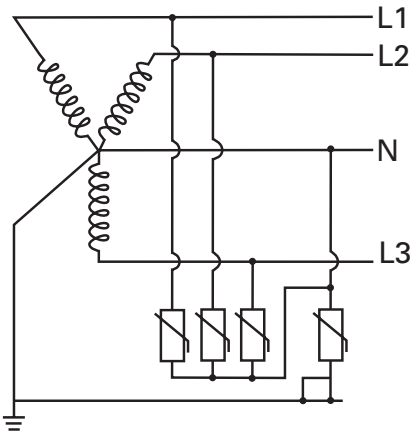

120/208V, 127/220V, 277/480V, 347/600Vac
Wye 3-phase, 4 wire + ground
BSPM4208WYNG, BSPM4480WYNG, BSPM4600WYNG

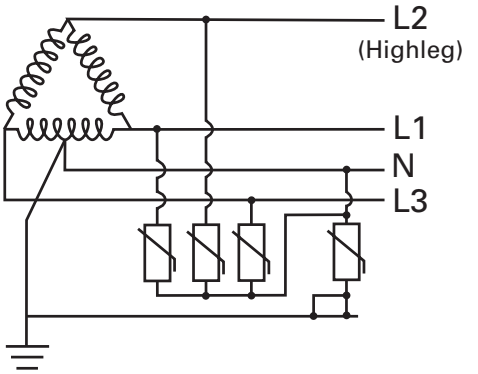

120/240V, 240/480Vac
Highleg Delta, 3-phase, 4 wire + ground
BSPM4240HLG, BSPM4480HLG

Ordering information:

Nominal system voltage		120/208Vac, 127/220Vac	120/240Vac	240/480Vac	277/480Vac	347/600Vac
Max. Continuous Operating AC Voltage MCOV (V_C)	[L-N/L-G]	275/550Vac	275/550Vac	385/770Vac	385/600Vac	600/875Vac
	[N-G/L-L]	275/550Vac	275/550Vac	385/770Vac	275/770Vac	275/1200Vac
	[H-N/H-G]	—	275/550Vac	600/985Vac	—	—
	[L-L]	—	550VAC	985Vac	—	—
Catalog numbers (base + modules)	W/O remote signaling	BSPM4208WYNG	BSPM4240HLG	BSPM4480HLG	BSPM4480WYNG	BSPM4600WYNG
	W/ remote signaling	BSPM4208WYNGR	BSPM4240HLGR	BSPM4480HLGR	BSPM4480WYNGR	BSPM4600WYNGR
Replacement module, MOV technology, four (4) total required	Module positions: L1 or L3	BPM275UL	BPM275UL	BPM385UL	BPM385UL	BPM600UL
	L2	BPM275UL	BPM275UL	BPM600UL	BPM385UL	BPM600UL
	N	BPM275UL	BPM275UL	BPM385UL	BPM275UL	BPM275UL
Specifications						
Rated voltage		120/208Vac, 127/220Vac	120/240Vac	240/480Vac	277/480Vac	347/600Vac
Voltage Protection Rating VPR	[L-N/L-G]	1kV/1.8kV	1kV/1.8kV	1.5kV/2.5kV	1.5kV/2.5kV	2kV/3kV
	[N-G/L-L]	1kV/1.8kV	1kV/1.8kV	1.5kV/2.5kV	1kV/2.5kV	1kV/4kV
	[H-N/H-G]	—	1kV/1.8kV	2kV/3kV	—	—
	[H-L]	—	1.8kV	3kV	—	—
SCCR		200kA	200kA	125kA	200kA	125kA
Discharge current	Nom. I_n	20kA				
	Max. I_{max}	40kA				
Response time t_A		≤25 ns				
Frequency		50/60Hz				
Number of poles		4				
Number of wires/connection points		4 wires / 5 connection points				
Operating state/fault indication		Green (good) / Red (replace)				
Cross-sectional area	Min.	14AWG - Cu stranded, solid or fine				
	Max.	2AWG - Cu solid or stranded, 4AWG - Cu fine				
Terminal torque		45 lb-in (5.1N•m)				
Mounting		35mm DIN-rail per EN 60715				
Enclosure material		Thermoplastic, UL 94V0				
Protection		IP20 (finger-safe)				
Location		Indoor				
Capacity		4 Mods, DIN 43880				
Application, standard		UL Type 2 Component Assembly, UL 1449, 4th Edition				
Agency information		cURus, RoHS Compliant				
Warranty		Five years*				
Remote contact signaling						
Signaling type		Changeover contact				
Switching capacity (volts/amps)	AC	250V/0.5A				
	DC	250V/0.1A; 125V/0.2A; 75V/0.5A				
Conductor and cross-sectional area		60/75°C Max. 1.5mm²/14AWG solid/flexible				
Ordering information		Order from catalog numbers above				

* See Eaton Bussmann SPD Limited Warranty Statement (3A1502) for details at www.cooperbussmann.com/surge.

The only controlled copy of this data sheet is the electronic read-only version located on the Eaton network drive. All other copies of this document are by definition uncontrolled. This bulletin is intended to clearly present comprehensive product data and provide technical information that will help the end user with design applications. Eaton reserves the right, without notice, to change design or construction of any products and to discontinue or limit distribution of any products. Eaton also reserves the right to change or update, without notice, any technical information contained in this bulletin. Once a product has been selected, it should be tested by the user in all possible applications.

Eaton
1000 Eaton Boulevard
Cleveland, OH 44122
Eaton.com

Bussmann Division
114 Old State Road
Ellisville, MO 63021
United States
Eaton.com/bussmannseries

© 2016 Eaton
All Rights Reserved
Printed in USA
Publication No. 2152 — BU-MC16XXX
February 2016

Eaton and Bussmann are valuable trademarks of Eaton in the U.S. and other countries. You are not permitted to use the Eaton trademarks without prior written consent of Eaton.

For Eaton's Bussmann series product information, call **1-855-287-7626** or visit:

Follow us on social media to get the latest product and support information.

Powering Business Worldwide