# Class J Fuse Blocks

## J600 Series



### Specifications

Description: 1-, 2- or 3-pole fuse blocks for use with Class J fuses (Cooper Bussmann® LPJ, DFJ and JKS).

Dimensions: See Dimensions illustrations.

Construction: Thermoplastic.

Poles: 1 to 3

Ratings:

Volts: — 600Vac/dc

Amps: — ½-600A

SCCR: — 200kA RMS Sym.

Agency Information: CE, UL Listed, UL 4248, Guide IZLT, File E14853, CSA Certified, C22.2 No. 4248, Class 6225-01, File 47235.

Flammability Rating: UL 94V0.

Mounting: Accepts DIN rail adapter DRA-1.

### Features and Benefits

- J600 fuse blocks provide one-, two- and three-pole housing for Class J fuses at 600Vac.
- J600 fuse blocks are listed with a Short-Circuit Current Rating of 200kA RMS Sym.

### Typical Applications

- 600Vac/dc or less Control Systems
- 600Vac/dc or less Industrial Control
- 600Vac/dc or less Individual Control Circuits

### Catalog Numbers

**Catalog Numbers**

| Screw† | Pressure Plate† | Box Lug | Box Lug w/ Retaining Clip | Amps | Poles | Fig. No. | Wire Range |
|---|---|---|---|---|---|---|---|
| J60030-1S* | J60030-1P | J60030-1C | J60030-1CR†† | ½-30 | 1 | 1 | C, CR #2-14 Cu, #2-8 Al |
| J60030-2S* | J60030-2P | J60030-2C | J60030-2CR†† | | 2 | 2 | COR #2-14 Cu Only |
| J60030-3S* | J60030-3P | J60030-3C | J60030-3CR†† | | 3 | 3 | P, PR, S, SR #10-14 Cu Only |
| — | — | J60060-1C | J60060-1CR†† | 31-60 | 1 | 1 | C, CR, #2-14 Cu/Al COR #4-14 Cu Only |
| — | — | J60060-2C | J60060-2CR†† | | 2 | 2 | |
| — | — | J60060-3C | J60060-3CR†† | | 3 | 3 | |
| — | — | — | J60100-1CR | 61-100 | 1 | 4 | COR 1/0-8 Cu Only |
| — | — | — | J60100-3CR†† | | 3 | 5 | CR, CRQ 1/0-8 Cu/Al |
| — | — | — | J60200-1CR | 101-200 | 1 | 6 | CR 250kcmil-6 Cu/Al |
| — | — | — | J60200-3CR | | 3 | 7 | |
| — | — | — | J60400-1CR** | 201-400 | 1 | 8 | CR 500kcmil -4 Cu/Al |
| — | — | — | J60400-3CR** | | 3 | 9 | |
| — | — | — | J60600-1CR | 401-600 | 1 | 10 | CR (2) 500kcmil-4/0 Cu/Al |
| — | — | — | J60600-3CR* | | 3 | 11 | |

†Clip reinforcing springs are standard on fuse blocks rated 100A and above. Available on 30A and 60A blocks by adding the letter "R" to the end of the part number.
††Copper only connections available by changing "CR" suffix to "COR".
*No UL, No CSA Certification
**UL Recognized, CSA Certification

### Dimensions - in (±0.015)

½ - 60A

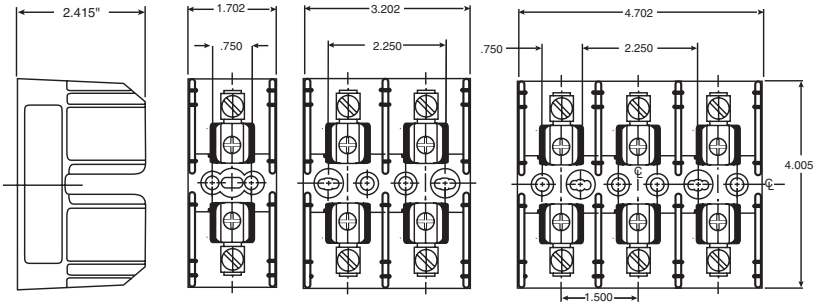


FIGURE 1. FIGURE 2. FIGURE 3.

61-100A

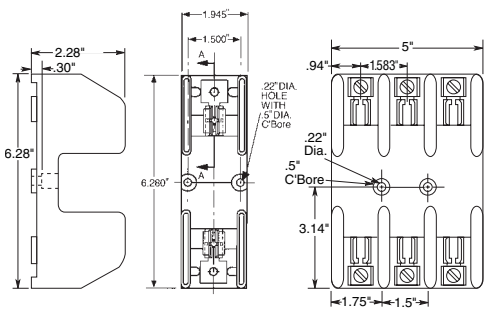


FIGURE 4. FIGURE 5.

Data Sheet: 1114