Eaton Conveyor Slack Belt Trip Switch - Installation Manual 71114

SAFETY NOTE

ONLY A COMPETENT ELECTRICIAN SHOULD CARRY OUT ELECTRICAL INSTALLATION, REPAIRS OR MAINTENANCE.

Ensure that the conveyor is electrically isolated and stationary before carrying out any work on any conveyor equipment.

Operation

The conveyor belt trip switches are used in conjunction with other accessories along side conveyor systems to provide a fail-safe stop mechanism for emergencies. They are installed along the entire length of the conveyor or wherever persons could have access. Once activated these switches isolate the control circuits to motors driving the conveyors and other process equipment.

There are two operating methods in an emergency, pull on the wire rope, attached at either end to the switch, in any direction. As the wire rope between any two conveyor trip switches is the emergency stop operating mechanism, these conveyor trip switches will automatically trip the conveyor control circuit should the wire rope become slack through a loose connection or breakage.

Installation

CHW53197A

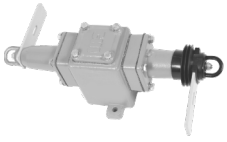

CHW53198A

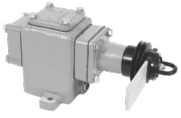

CHW53198

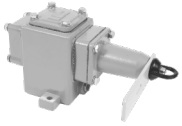

CHW53197A - Double end switch with one anchor position and one tension position end
CHW53198A - Single end switch with one tension position end only
CHW53198 - Single end switch with one anchor position end only

Anchor points can be identified by the absence of black boots and tension points can be identified by the presence of black boots. When installing a system with slack wire rope detection a combination of switches must be configured so that an anchor point is always connected to a tension point. Please see example below:

Example selecting switches for a slack rope system of 335 metres:

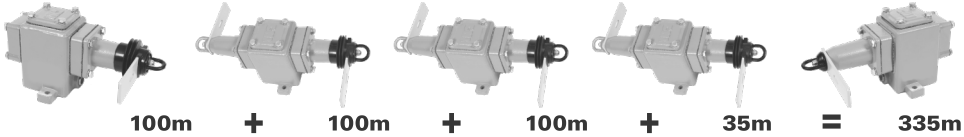

EATON

Powering Business Worldwide

1. Mount the double and single switches as per example on page 1 ensuring the distance between switches never exceeds 100 m although may be less.

2. Gland and terminate each switch electrically before proceeding with the installation. For details on electrical termination see section on Wiring Diagrams that follows on page 5.

3. Drill and mount pigtails 1.8 m apart between the switches. You will require a 10 mm hole to secure each pigtail. Mount the pigtails in line to guide the wire rope from one switch to the next with the wire rope passing through the centre of the eye on the pigtail.

PT12SCW5000



Pigtail, M10 x 125, 1,5 turns 80mm thread

4. Thread the wire rope through the eye of the pigtails between switches.

5. Attach the wire rope to the anchor position end on each switch as shown below using one thimble and two Crosby clamps.

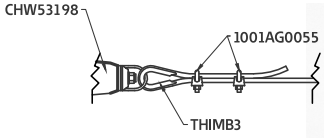



THIMB3

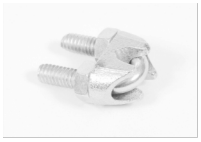

1001AG0055



3-5/33 - Wire Rope

6. Ensure that the anchor position ends of the switches are in the healthy position, the yellow trip flag must be vertical. If it's horizontal, it's in the tripped position. (See “Detail B” below.)

7. Reset the switch anchor position end by moving the yellow trip flag to the vertical position.

8. Ensure the tension position ends are all in the slack trip position. Move the yellow trip flag from the horizontal position to the vertical position and back.

9. Now connect the tension position end on the switches to the wire rope with a turnbuckle in line as shown below using a thimble and Crosby clamps: (Turn both eye bolts on the turn buckle out to max before connecting to allow for tensioning later).

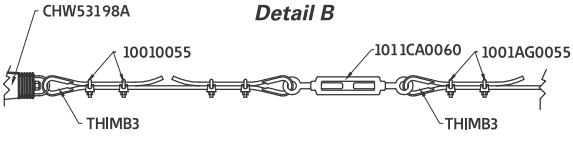

53173

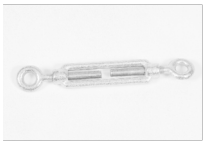

Turnbuckle must be turned out to max before connecting

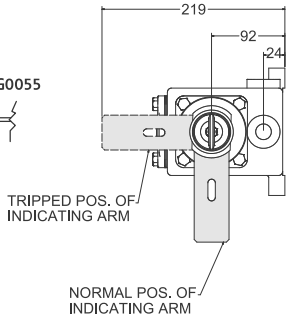

10. With the wire rope connected at either end you are now ready to tension the wire rope. Hold the tension end trip flag in a vertical position against the spring force while turning the turnbuckle to take up the slack in the wire rope until you have 94mm between the trip flag and the switch arm as per below diagram.

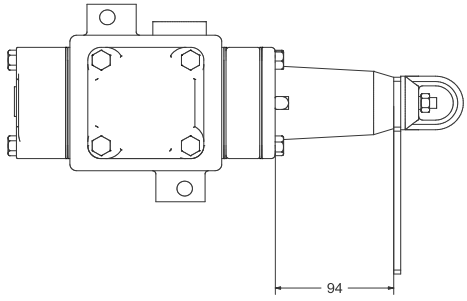

Using all the accessories as supplied by EATON ELECTRIC you will not need to re-adjust the tension between the temperatures of 0ºC and 40ºC.

Reset after conveyor safety switch trip

The trip position can be identified on the switch as the yellow trip flag will be horizontal.

Should the conveyor safety switch have tripped on a slack or broken rope, follow the installation instructions above. Should the conveyor safety switch have tripped after the wire rope was pulled in any direction:

1. Start by always resetting the tension end. Move the tension position end yellow trip flag from the horizontal position to the vertical position.

2. Pull the wire rope on this same tension position end to produce a pulled trip. (This is done to gain the slack required in the rope to reset the anchor position end.)

3. Reset the anchor position end by moving the yellow trip flag from the horizontal position to the vertical position.

4. Finally return to the tension position end and rest it for the last time by moving the yellow flag from the horizontal position to the vertical position.

While resetting both switches do a visual check of the rope, pigtails, thimbles and Crosby clamps on the tripped section to make sure the installation has not been compromised by whatever activated the wire rope, rock falling off the conveyor.

Electrical connection

Each anchor position end has one normally open contact that will be open in the trip position and close in the healthy position as well as one normally closed contact that will close in trip position and open in healthy position to ensure fail-safe operation.
Each tension position end has two normally open contacts that will be open in the trip position and close in the healthy position as well as two normally closed contacts that will close in trip position and open in healthy position to ensure fail-safe operation.

Contacts	Description	Bin No
3NO / 3NC	Double End Switch with one anchor position and one tension position end	**CHW53197A**
2NO / 2NC	Single End Switch with one tension position end only	**CHW53198A**
1NO / 1NC	Single End Switch with one anchor position end only	**CHW53198**

All these contacts must be wired in series to ensure continuity of the control circuit. On the tension position end a double contact block has been used which must be bridged as per diagram below.

Maximum Ampere Rating (A)	AC				DC	
VOLTS	**120**	**240**	**480**	**600**	**125**	**250**
Make and Emergency Interupting Capacity	60.0	30.0	15.0	12.0	1.1	0.55
Normal Load Break	6.0	3.0	1.5	1.2	1.1	0.55
Continuous Current	10.0	10.0	10.0	10.0	5.0	5.0



Dry Circuit **Medium-Duty** **Heavy-Duty**

Contact blocks have two mechanically and electrically isolated contacts for greater protection against arcing and carbon tracking. The contact nibs combine a scrubbing action with high-pressure density when the contacts are closed. The nibs are reliable self-adjusting to the application dry, normal or heavy duty. Moulded from high impact phenolic, the contact structure provides superior resistance to moisture, heat and mechanical abuse. Foreign matter cannot reach the contacts to cause excessive wear and fatigue resisting stainless steel springs ensure a uniform arc gap at all times. When load is applied, the contact tips adjust to an exact size to efficiently carry normal or heavy load current making them ideal for low voltage dc or high voltage ac applications.

Wiring Diagrams

CHW53198A SINGLE TAUT ROPE SWITCH WITH PLC FEEDBACK CONTACTS

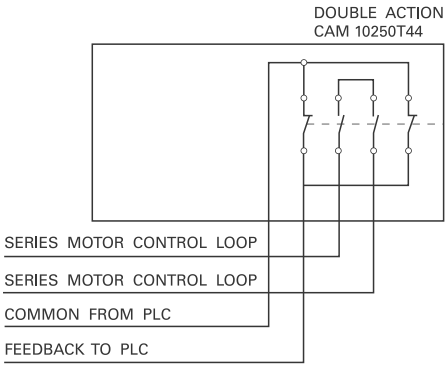

CHW53197A DOUBLE TAUT ROPE SWITCH WITH PLC FEEDBACK CONTACTS

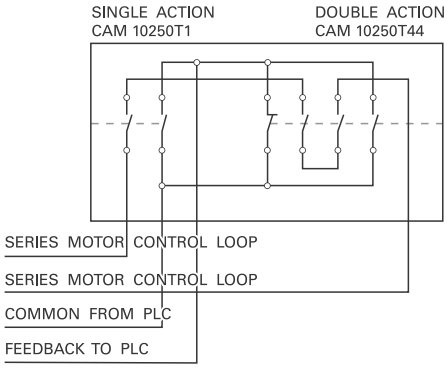

CHW53198 SINGLE BELT TRIP SWITCH WITH PLC FEEDBACK CONTACTS

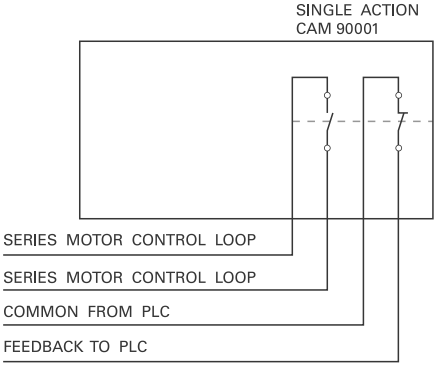

Wiring Diagrams

CHW53198A SINGLE TAUT ROPE SWITCH WITH LED LIGHT

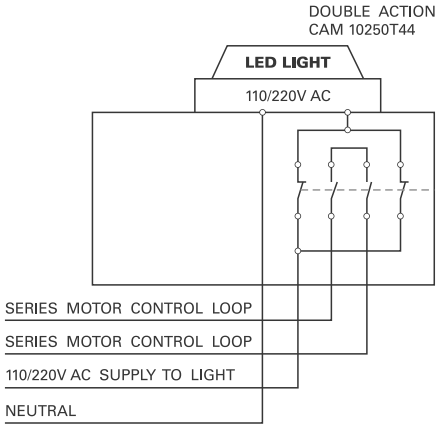

CHW53197A DOUBLE TAUT ROPE SWITCH WITH LED LIGHT

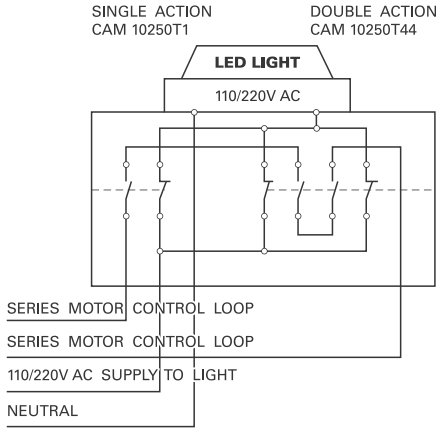

CHW53198 SINGLE BELT TRIP SWITCH WITH LED LIGHT

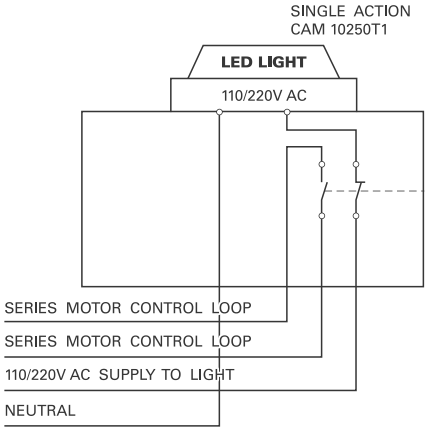

Technical Data

Due to the environment these switches operate in, they have been tested to Zone 21 specification by Explolabs. They are also manufactured to ISO 9001, ISO 14000 and ISO 18000 to ensure the highest quality at all times.

DEVICE COMPLIES WITH	IEC / SANS 60079-0 2005 Ed3
	IEC / SANS 60079-1 2004 Ed3
	IEC 60947-5-1
MOUNTING	2 Bolts M10
AMBIENT TEMP	-20°C - 70°C
PROTECTION	IP66
CABLE ENTRY	3 x M20



Ordering Information

Complete Belt Trip Switches

Description	Part No
Taut rope double end belt trip switch with fail safe contacts	**CHW53197A**
Taut rope single end belt trip switch with fail safe contacts	**CHW53198A**
Single end belt trip switch with fail safe contacts	**CHW53198**

Accessories.

Description	Part No
Pigtail, M10 x 125, 1.5 turns 80mm thread	**PT125CW5000**
Crosby clamp for steel rope	**1001AG0055**
33m 2.5mm Steel rope covered to 6mm PVC	**3 - 5/33**
61m 2.5mm Steel rope covered to 6mm PVC	**3 - 5/61**
Turn buckle eye/ eye M10 x 125mm	**1011CA0060**
Thimble - 2.5mm wire rope	**THIMB3**
110/220V a.c. Flashing amber LED light c/w cover (50mA)	**CHW53203A**
110/220V a.c. Flashing red LED light c/w cover (50mA	**CHW53203B**
Contact block 1N.O./1N.C.	**10250T1**
Contact block 2N.O./2N.C.	**10250T44**



Dimensions (mm)

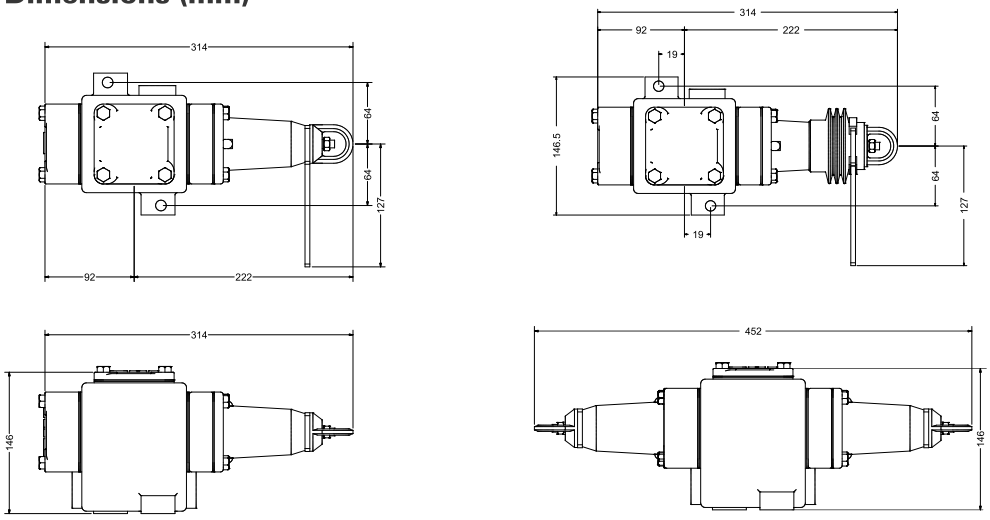

Diagram to detail where the thimbles, Crosby clamps, turnbuckle, pigtails and wire rope are to be used with suggested distances.

