Fusing Equipment
Catalog Data
CA132027EN

Effective November 2025
Supersedes November 2020

COOPER POWER SERIES

ELF current-limiting dropout fuse



General

Eaton's Cooper Power™ series ELF™ full-range current-limiting dropout fuse is designed for mounting in an industry standard interchangeable cutout that is presently used for expulsion fuses. The ELF fuse is designed to protect pole-type transformers, single-phase and three-phase laterals, and underground taps.

The full-range current-limiting rating ensures reliable operation of all overloads and fault currents. The element construction consists of two separate sections (low-current and high-current) that are self-contained in one housing. The low-current section provides consistent, reliable clearing of all currents high enough to melt the element. The high-current section is a punched-hole ribbon design that controls peak arc voltage levels and limits both current and energy (I^2t) let-through levels during high-current fault clearing operation.

The self-contained design of the ELF dropout fuse eliminates expulsive sparks that exist with an expulsion fuse. This offers increased safety to line personnel during circuit energization operations. In addition, the reliable drop-open design makes locating the fault easy.

Production tests

Tests are conducted on 100% of production in accordance with Eaton requirements.

- Physical inspection
- I^2t testing
- Resistance testing
- Vacuum over water testing

Installation

The ELF fuse is designed to be mounted in 15 kV and 27 kV (110 kV, 125 kV, or 150 kV BIL) rated interchangeable open distribution cutouts including Eaton's Type L, S&C Type XS, Hubbell Type C™, and ABB Type ICX™. Designs for use in 38 kV (170 kV BIL) rated ABB ICX porcelain cutouts are also available.

Due to its small size, the ELF fuse is easy to install using a clampstick (refer to *Service Information MN132028EN ELF Current-Limiting Dropout Fuse Installation Instructions*).

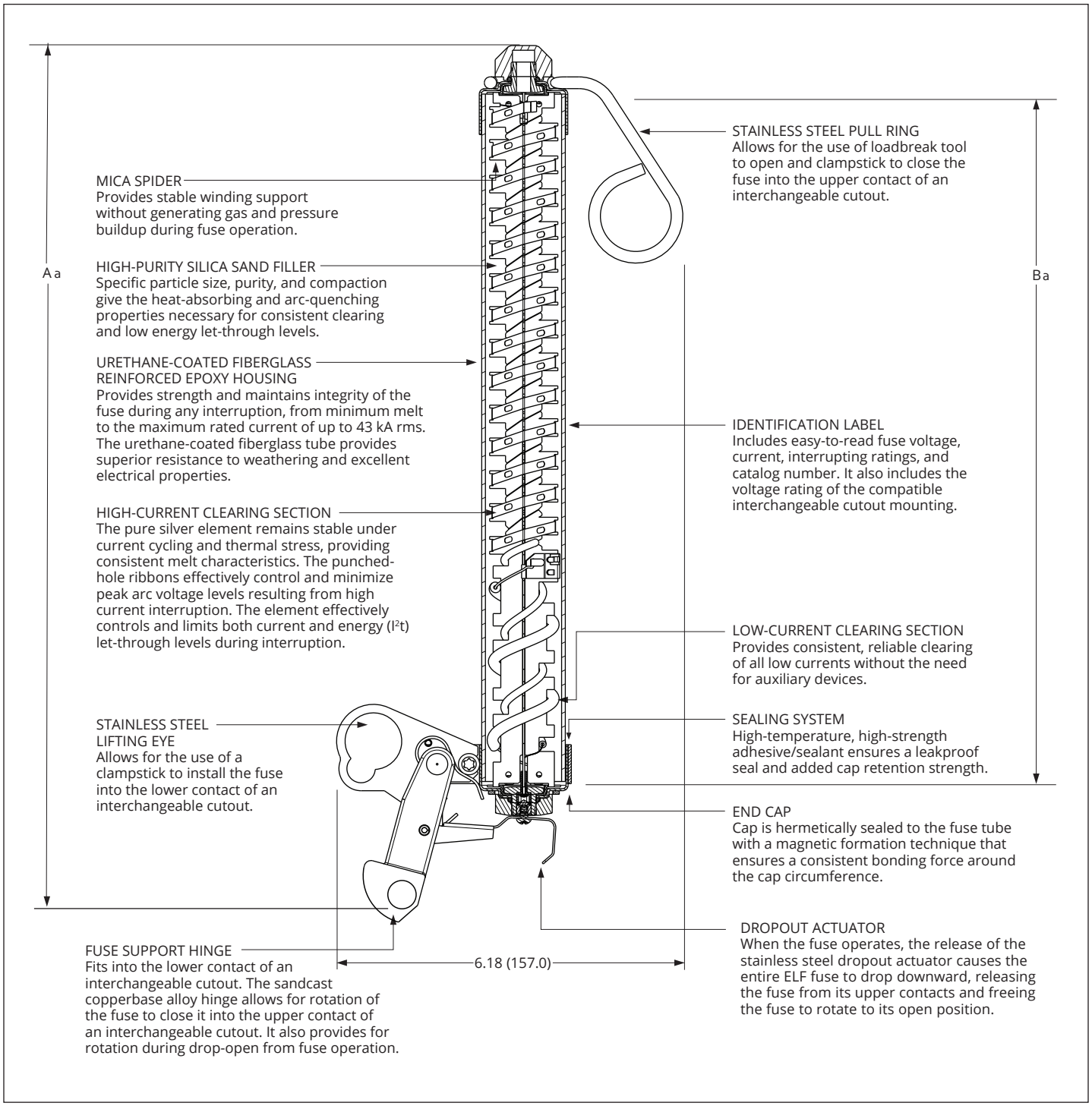

Figure 1. Line illustration of single-barrel ELF fuse cutaway—dimensions in inches (mm)

a See **Table 5**, **Table 6**, or **Table 7** for dimensions A and B.

Table 1. ELF fuse electrical ratings and characteristics

Fuse ratings		Cutout rating		Continuous current ratings (A)[a]			Minimum melt I^2t ($A^2 \cdot s$)	Maximum clear I^2t ($A^2 \cdot s$)	Maximum interrupting current (A rms symmetrical)
Voltage (kV)	Current (A)	Voltage (kV)	BIL (kV)	25 °C	40 °C	55 °C			
8.3	6	15	110	8	7	6	520	4550	31000
	8	15	110	12	11	11	1150	6500	31000
	12	15	110	18	17	16	1150	7000	31000
	18	15	110	25	24	23	1350	8600	31000
	20	15	110	27	26	25	2000	11700	31000
	25	15	110	34	33	31	2900	17000	31000
	30	15	110	43	41	39	4000	20000	31000
	40	15	110	50	48	46	8000	39000	31000
	50 b	15	110	68	65	62	16000	65000	31000
	65 b	15	110	78	75	71	20000	100000	31000
	80 b	15	110	95	91	87	32000	150000	31000
	100 b	15	110	120	114	109	46000	215000	31000
15.0	6	15	110	8	7	6	520	4550	20000
	8	15	110	12	11	11	1150	6500	20000
	12	15	110	18	17	16	1150	7000	20000
	18	15	110	25	24	23	1350	8600	20000
	20	15	110	27	26	25	2000	11700	20000
8.3	6	27	150	8	7	6	520	4550	31000
	8	27	150	12	11	11	1150	6500	31000
	12	27	150	18	17	16	1150	7000	31000
	18	27	150	25	24	23	1350	8600	31000
	20	27	150	27	26	25	2000	11700	31000
	25	27	150	34	33	31	2900	17000	31000
	30	27	150	43	41	39	4000	20000	31000
	40	27	150	50	48	46	8000	39000	31000
	50 b	27	150	68	65	62	16000	65000	31000
	65 b	27	150	78	75	71	20000	100000	31000
	80 b	27	150	95	91	87	32000	150000	31000
	100 b	27	150	120	114	109	46000	215000	31000
15.0 c	6	27	150	8	7	6	520	4550	43000
	8	27	150	12	11	11	1150	6500	43000
	12	27	150	18	17	16	1150	7000	43000
	18	27	150	25	24	23	1350	8600	43000
	20	27	150	27	26	25	2000	11700	43000
	25	27	150	34	33	31	2900	17000	43000
15.0	30	27	150	43	41	39	5100	25000	20000
15.0 c	30 b	27	150	43	41	39	5100	25000	43000
	40 b	27	150	50	48	46	8000	39000	43000
	50 b	27	150	68	65	62	16000	65000	43000
23.0	6	27	150	8	7	6	520	5200	31000
	8	27	150	12	11	11	1150	7000	31000
	12	27	150	18	17	16	1150	8000	31000
	18	27	150	25	24	23	1350	10000	31000
	20	27	150	27	26	25	2000	14000	31000
	25 b	27	150	34	33	31	2900	20000	31000
	30 b	27	150	43	41	39	5100	30000	31000
24.0	6	36	170	8	7	6	520	5200	13000
	8	36	170	12	11	11	1150	7000	13000
	12	36	170	18	17	16	1150	8000	13000
	18	36	170	25	24	23	1350	10000	13000
	20	36	170	27	26	25	2000	14000	13000

a For temperatures other than listed, a deration factor of 0.26% per °C can be applied.

b Multi-barrel design.

c 15 kV, 125 kV BIL, 6 A through 25 A (single-barrel part numbers FAK44W6 through FAK44W25) and 30 A through 50 A (double-barrel part numbers FAK44W30P, FAK44W40, and FAK44W50) have been tested and approved for 17.2 kV application.

Application introduction for Tables 2, 3, and 4

Fuse voltage ratings refer to the maximum voltage allowed across the fuse at the time of interruption. The fuse's voltage rating must be larger than the system's line-to-ground voltage. In the case of a three-phase system, there are conditions where a three-phase fault may occur, thus putting two of the primary fuses in series. If such a fault occurs and the current is high enough to cause the fuses to operate relatively quickly, then the fuses will effectively operate simultaneously and the voltage across both fuses will not exceed the line-to-ground rating.

If such a fault occurs and the current is low and there is no other protection scheme on the system for secondary faults, then the probability the fuses operate simultaneously is very low and line-to-line voltage will be impressed on the first fuse attempting to interrupt. In this case, the voltage will be too high for the fuse to successfully complete interruption.

Table 2. Recommended ELF current-limiting dropout fuse voltage ratings (refer to Application Introduction above)

		Recommended fuse ratings (kV)			
System voltage (kV)		**Four-wire multi-grounded neutral**		**Three-wire wye or delta**	
Nominal	**Maximum**	**Single-phase**	**Three-phase**	**Single-phase (line-to-line)**	**Three-phase**
2.4	2.54	—	—	8.3	8.3
4.16/2.4	4.4/2.54	8.3	8.3	—	—
4.16	4.4	—	—	8.3	8.3
4.8	5.08	—	—	8.3	8.3
6.9	7.26	—	—	8.3	8.3
7.2	7.62	—	—	8.3	8.3
7.97	8.4	—	—	8.3	8.3
8.32/4.8	8.8/5.08	8.3	8.3	—	—
11.0	12.0	—	—	15	15
12.0/6.93	12.7/7.33	8.3	15 or 8.3[a]	—	—
12.47/7.2	13.2/7.62	8.3	15 or 8.3[a]	—	—
12.47	13.2	—	—	15	15
13.2/7.62	13.97/8.07	8.3	15 or 8.3[a]	—	—
13.2	13.97	—	—	15	15
13.8/7.97	14.52/8.38	8.3	15 or 8.3[a]	—	—
13.8	14.52	—	—	15	15
14.4	15.24	—	—	15	15
16.3	17.1	—	—	15[c]	15[c]
20.78/12.0	22.0/12.7	15	23 or 15[a]	—	—
22.0	24.0	—	–	23[b]	23[b]
22.86/13.2	24.2/13.97	15	23 or 15[a]	—	—
23.0	24.34	—	—	23[b]	23[b]
24.9/14.4	26.4/15.24	15	23 or 15[ac]	—	—
34.5/19.92	36.51/21.08	23	—	—	—

a A lower voltage fuse rating may be used if either of the following conditions are met:

1) If the probability of a line-to-line and a three-phase ungrounded fault is very low.

-or-

2) If all the conditions below are met:

- If the probability of a three-phase ungrounded primary fault is very low
- If a secondary breaker or other series connected device is used to interrupt secondary faults
- If no more than 50% of the secondary load is delta connected
- If the line-to-line primary fault current is high enough to ensure simultaneous operation of two fuses by melting at a maximum of 0.2 seconds

b A 23 kV rated fuse is recommended where 125 kV BIL interchangeable cutout mountings are used and a 24 kV rated fuse is recommended where 170 kV BIL interchangeable cutout mountings are used.

c 15 kV, 125 kV BIL, 6 A through 25 A (single-barrel part numbers FAK44W6 through FAK44W25) and 30 A through 50 A (double-barrel part numbers FAK44W30P, FAK44W40, and FAK44W50) are recommended for this application.

Table 3. Recommendations for distribution transformers in single-phase applications (refer to Application Introduction on page 4) (refer to Figure 3 for primary voltage connections, Figures A and D)

Fuse voltage	8.3 kV		8.3 kV		8.3 kV		15.0 kV	
System voltage	2400 Δ		4160 Y/2400		4800 Δ		8320 Y/4800	
Single-phase transformer size (kVA)	Figure A		Figure D		Figure A		Figure D	
	Rated amps	Fuse rating	Rated amps	Fuse rating	Rated amps	Fuse rating	Rated amps	Fuse rating
10	4.17	6	4.17	6	2.08	6[a]	2.08	6[a]
15	6.25	12[a]	6.25	12[a]	3.13	6	3.13	6
25	10.42	18	10.42	18	5.21	8	5.21	8
37.5	15.63	20	15.63	20	7.81	12	7.84	12
50	20.83	30	20.83	30	10.42	18	10.42	18
75	31.25	40	31.25	40	15.63	20	15.63	20
100	41.67	50	41.67	50	20.83	30	20.83	30
167	69.58	80	69.58	80	34.79	50	34.79	50
250	104.17	100[b]	104.17	100[b]	52.08	65	52.08	65
333	138.75	—	138.75	—	69.38	80	69.38	80

Fuse voltage	8.3 kV		8.3 kV		8.3 kV		15.0 kV	
System voltage	7200 Δ		12470 Y/7200		13200 Y/7620		12000 Δ	
Single-phase transformer size (kVA)	Figure A		Figure D		Figure D		Figure A	
	Rated amps	Fuse rating	Rated amps	Fuse rating	Rated amps	Fuse rating	Rated amps	Fuse rating
10	1.39	6[a]	1.39	6[a]	1.31	6[a]	0.83	6[a]
15	2.08	6[a]	2.08	6[a]	1.97	6[a]	1.25	6[a]
25	3.47	6	3.47	6	3.28	6	2.08	6[a]
37.5	5.21	8	5.21	8	4.92	8	3.13	6
50	6.94	12[a]	6.94	12[a]	6.56	12[a]	4.17	6
75	10.42	18	10.42	18	9.84	18[a]	6.25	12[a]
100	13.89	20	13.89	20	13.12	18	8.33	12
167	23.19	30	23.19	30	21.92	30	13.92	20
250	34.72	50	34.72	50	32.81	40[c]	20.83	30
333	46.25	65	46.25	65[d]	43.70	50	27.75	40
500	69.44	80	69.44	80[d]	65.62	80[d]	41.67	50

Fuse voltage	15.0 kV		15.0 kV		15.0 kV		23.0 kV	
System voltage	13200 Δ		14400 Δ		24940 Y/14400		34500 Y/19920	
Single-phase transformer size (kVA)	Figure A		Figure A		Figure D		Figure D	
	Rated amps	Fuse rating	Rated amps	Fuse rating	Rated amps	Fuse rating	Rated amps	Fuse rating
10	0.76	6[a]	0.69	6[a]	0.69	6[a]	0.50	—
15	1.14	6[a]	1.04	6[a]	1.04	6[a]	0.75	—
25	1.89	6[a]	1.74	6[a]	1.74	6[a]	1.25	—
37.5	2.84	6[a]	2.60	6[a]	2.60	6[a]	1.88	—
50	3.79	6	3.47	6	3.47	6	2.51	—
75	5.68	8	5.21	8	5.21	8	3.77	6[a]
100	7.58	12	6.94	12[a]	6.94	12[a]	5.02	8
167	12.65	18	11.60	18	11.60	18	8.38	12
250	18.94	25	17.36	25	17.36	25	12.55	18
333	25.23	30	23.13	30	23.13	30	16.72	25
500	37.88	50	34.72	50	34.72	50	25.10	30

a Fuse allows more than 300% load for 300 seconds.

b A lower voltage fuse rating may be used if either of the following conditions are met:

1) If the probability of a line-to-line and a three-phase ungrounded fault is very low.

-or-

2) If all the conditions below are met:
- If the probability of a three-phase ungrounded primary fault is very low
- If a secondary breaker or other series connected device is used to interrupt secondary faults
- If no more than 50% of the secondary load is delta connected
- If the line-to-line primary fault current is high enough to ensure simultaneous operation of two fuses by melting at a maximum of 0.2 seconds

c 8.3 kV rated fuse is a single-barrel fuse, 15 kV rated fuse is a double-barrel fuse.

d Available only at 8.3 kV.

Table 4. Recommendations for distribution transformers in three-phase applications (refer to Application Introduction on page 4) (refer to Figure 3 for primary voltage connections, Figures B, C, E, and F)

Fuse voltage	8.3 kV				8.3 kV		8.3 kV				8.3 kV	
	2400 Δ				4160 Y/2400		4800 Δ				8320 Y/4800	
System voltage	Figure B [a]		Figure C		Figures E [a] and F		Figure B [a]		Figure C		Figures E [a] and F	
Single-phase kVA	Rated amps	Fuse rating	Rated amps	Fuse rating	Rated amps	Fuse rating	Rated amps	Fuse rating	Rated amps	Fuse rating	Rated amps	Fuse rating
10	4.17	6	7.22	12 [b]	4.17	6	2.08	6 [b]	3.61	6	2.08	6 [b]
15	6.25	12 [b]	10.83	18	6.25	12 [b]	3.13	6	5.41	8	3.13	6
25	10.42	18	18.04	25	10.42	18	5.21	8	9.02	12	5.21	8
37.5	15.63	20	27.06	40	15.63	20	7.81	12	13.53	18	7.84	12
50	20.83	30	36.09	50	20.83	30	10.42	18	18.04	25	10.42	18
75	31.25	40	54.13	80	31.25	40	15.63	20	27.06	40	15.63	20
100	41.67	50	72.17	100	41.67	50	20.83	30	36.08	50	20.83	30
167	69.58	80	120.28	—	69.58	80	34.79	50	60.14	80	34.79	50
250	104.17	100 [c]	180.42	—	104.17	100 [c]	52.08	65	90.21	—	52.08	65
333	138.75	—	240.56	—	138.75	—	69.38	80	120.28	—	69.38	80

Fuse voltage	8.3 kV				15.0 kV or 8.3 kV [c]		15.0 kV or 8.3 kV [c]				15.0 kV	
	7200 Δ				12470 Y/7200		13200 Y/7620				12000 Δ	
System voltage	Figure B [a]		Figure C		Figures E [a] and F		Figures E [a] and F		Figure B		Figure C	
Single-phase kVA	Rated amps	Fuse rating	Rated amps	Fuse rating	Rated amps	Fuse rating	Rated amps	Fuse rating	Rated amps	Fuse rating	Rated amps	Fuse rating
15	2.08	6 [b]	3.61	6	2.08	6 [b]	1.97	6 [b]	1.25	6 [b]	2.17	6 [b]
25	3.47	6	6.01	8	3.47	6	3.28	6	2.08	6 [b]	3.61	6
37.5	5.21	8	9.02	12	5.21	8	4.92	8	3.13	6	5.41	8
50	6.94	12 [b]	12.03	18	6.94	12 [b]	6.56	12 [b]	4.17	6	7.22	12 [b]
75	10.42	18	18.04	25	10.42	18	9.84	18 [b]	6.25	12 [b]	10.83	18
100	13.89	20	24.06	30	13.89	20	13.12	18	8.33	12	14.43	20
167	23.19	30	40.10	50	23.19	30	21.92	30	13.92	20	24.06	30
250	34.72	50	60.14	80	34.72	50	32.81	40 [e]	20.83	30	36.08	50
333	46.25	65	80.19	100	46.25	65 [d]	43.70	50	27.75	40	48.11	50
500	69.44	80	120.28	—	69.44	80 [d]	65.62	80 [d]	41.67	50	72.17	—

Fuse voltage	15 kV				15 kV				15 kV [ce]	
System voltage	13200				14400				24940 Y/14400	
	Figure B [a]		Figure C		Figure B [a]		Figure C		Figures E [a] and F	
Single-phase kVA	Rated amps	Fuse rating	Rated amps	Fuse rating	Rated amps	Fuse rating	Rated amps	Fuse rating	Rated amps	Fuse rating
10	0.76	6 [b]	1.31	6 [b]	0.69	6 [b]	1.20	6 [b]	0.69	6 [b]
15	1.14	6 [b]	1.97	6 [b]	1.04	6 [b]	1.80	6 [b]	1.04	6 [b]
25	1.89	6 [b]	3.28	6	1.74	6 [b]	3.01	6	1.74	6 [b]
37.5	2.84	6	4.92	8	2.60	6 [b]	4.51	8 [b]	2.60	6 [b]
50	3.79	6	6.56	12 [b]	3.47	6	6.01	8	3.47	6
75	5.68	8	9.84	18 [b]	5.21	8	9.02	12	5.21	8
100	7.58	12	13.12	25	6.94	12 [b]	12.03	18	6.94	12 [b]
167	12.65	18	21.87	30	11.60	18	20.05	25	11.60	18
250	18.94	25	32.80	50	17.36	25	30.07	40	17.36	25
333	25.23	30	43.74	—	23.13	30	40.09	50	23.13	30
500	37.88	50	65.61	—	34.72	50	60.14	—	34.72	50

a The recommended fuse sizes for this connection are based on equal size transformers in the bank. If a larger transformer is used in the bank for supplying single-phase loads, the fuse selections should be based on the larger transformer kVA.

Recommended fuse ratings are based on the use of ELF fuse time-current characteristics in R240-91-42, R240-91-43, and R240-91-44. Recommendations provide overload protection (fusing ratio) between 200% and 300% rated load.

$$\text{Fusing Ratio} = \frac{\text{Fuse Min. Melt Current at 300 sec}}{\text{Transformer Full Load Current}} \times 100$$

b Fuse allows more than 300% load for 300 seconds.

c A lower voltage fuse rating may be used if either of the following conditions are met:
1) If the probability of a line-to-line and a three-phase ungrounded fault is very low.
-or-
2) If all the conditions below are met:
- If the probability of a three-phase ungrounded primary fault is very low
- If a secondary breaker or other series connected device is used to interrupt secondary faults
- If no more than 50% of the secondary load is delta connected
- If the line-to-line primary fault current is high enough to ensure simultaneous operation of two fuses by melting at a maximum of 0.2 seconds

d Available only at 8.3 kV.

e 8.3 kV rated fuse is a single-barrel fuse, 15 kV rated fuse is a double-barrel fuse.

f 15 kV, 6 A through 25 A (single-barrel part numbers FAK44W6 through FAK44W25) and 30 A through 50 A (double-barrel part numbers FAK44W30P, FAK44W40, and FAK44W50) are recommended for this application.

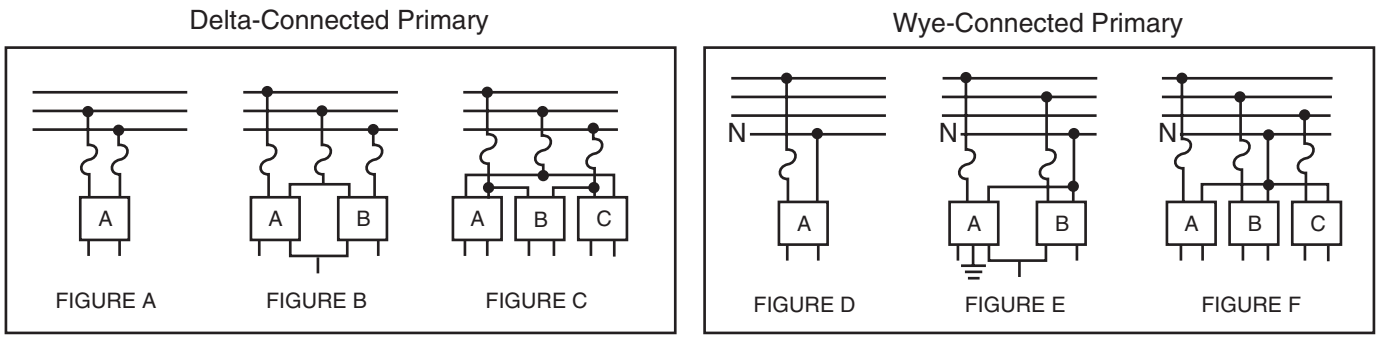

Figure 2. Schematic of primary voltage system connections

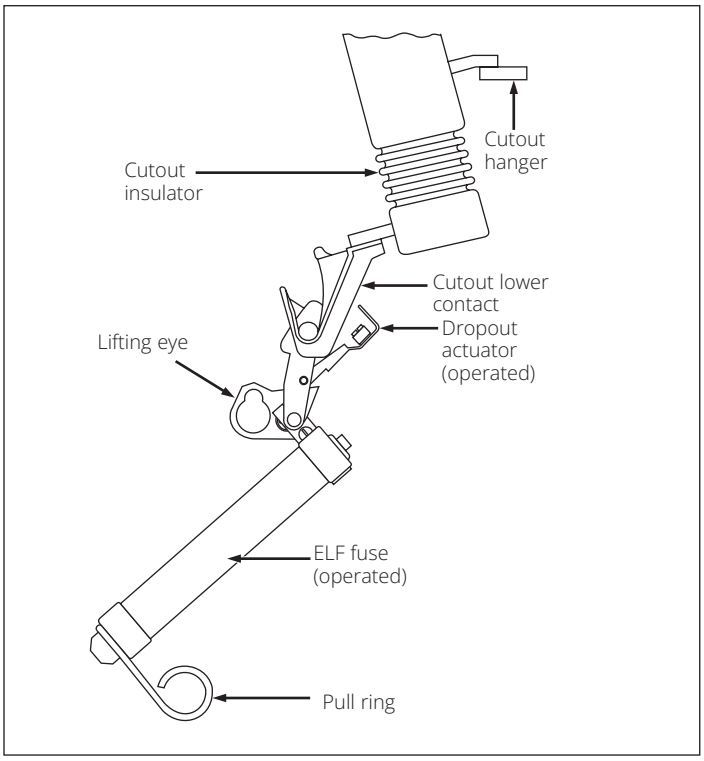

Figure 3. ELF fuse in interchangeable cutout after dropping open due to operation of dropout actuator

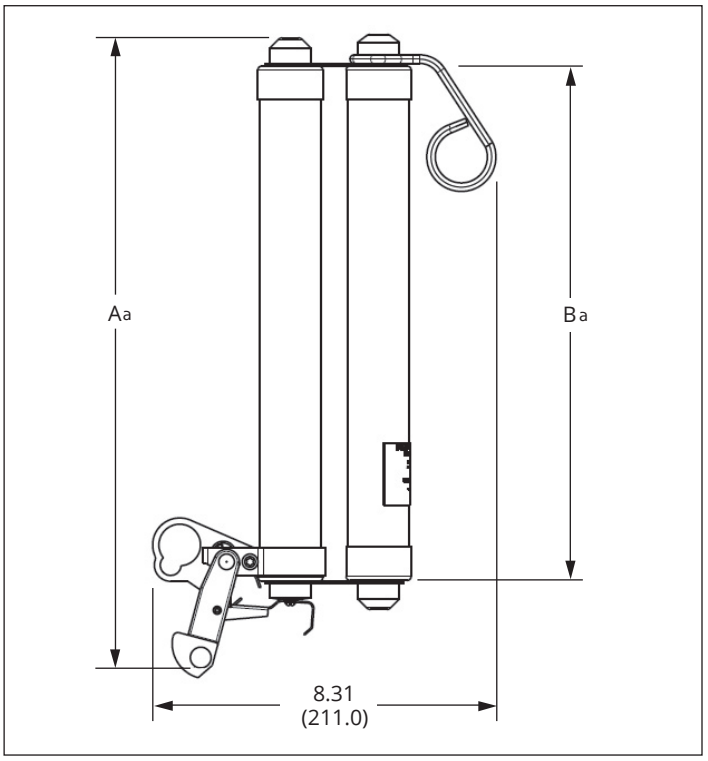

Figure 4. Double-barrel ELF fuse—dimensions in inches (mm)

a See **Table 5**, **Table 6**, or **Table 7** for dimensions A and B.

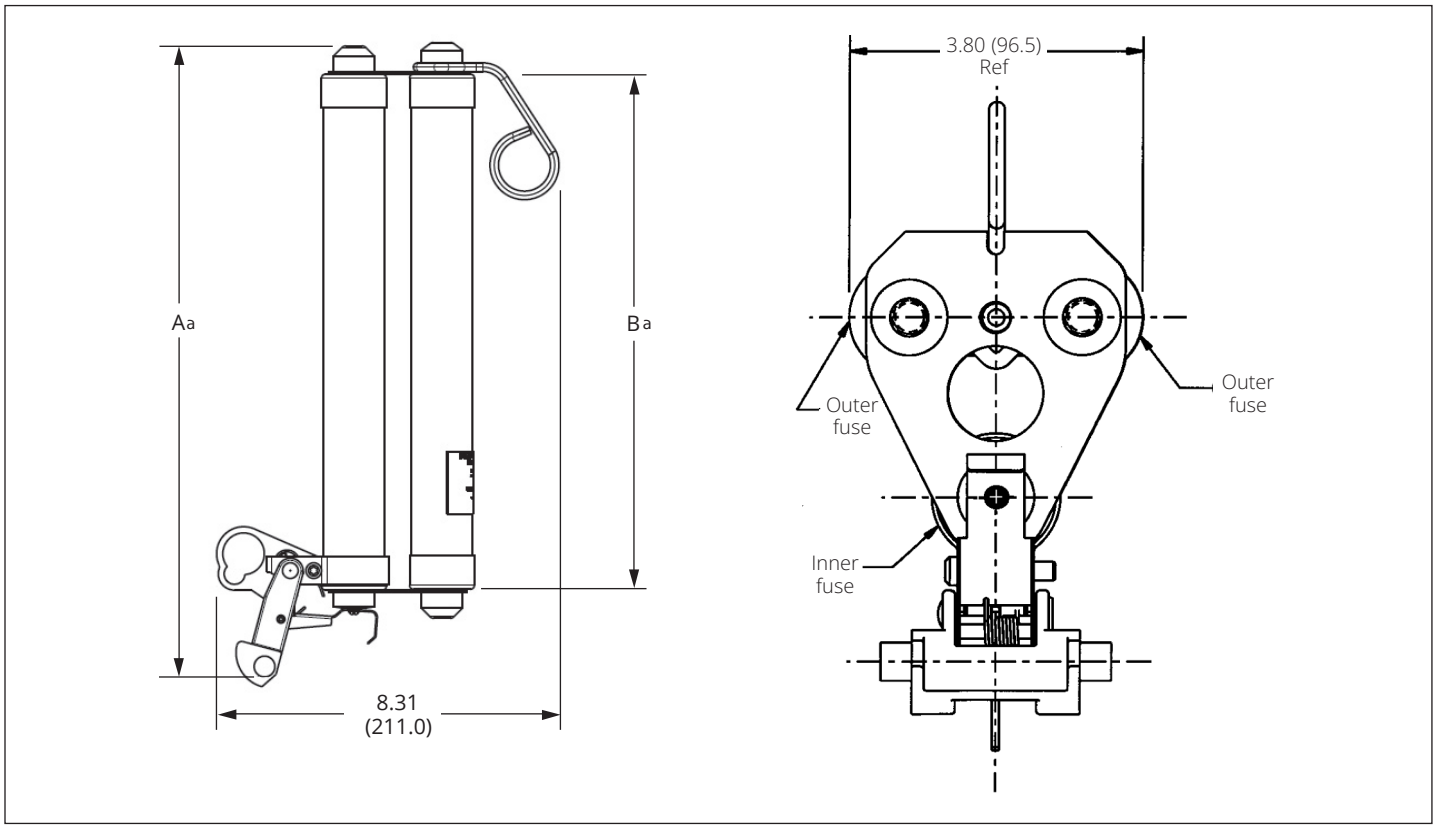

Figure 5. Triple-barrel ELF fuse—dimensions in inches (mm)

a See **Table 5**, **Table 6**, or **Table 7** for dimensions A and B.

Operation

When the ELF fuse clears a fault, the dropout actuator operates and allows the fuse to drop open in the cutout. (Refer to **Figure 3**.)

Ordering information

To order an ELF current-limiting dropout fuse, determine the ampere and voltage ratings of the application; specify required fuse from **Table 5**, **Table 6**, or **Table 7**.

Table 5. ELF current-limiting dropout fuse catalog numbers for 15 kV, 110 kV BIL interchangeable cutouts

Fuse rating				Dimensions in inches (mm)	
Voltage (kV)	Current rating (A)	ELF fuse catalog number	Figure	A	B
8.3	6	**FAK23W6**	1	11.37 (289.0)	8.83 (224.0)
	8	**FAK23W8**	1		
	12	**FAK23W12**	1		
	18	**FAK23W18**	1		
	20	**FAK23W20**	1		
	25	**FAK23W25**	1		
	30	**FAK23W30**	1		
	40	**FAK23W40**	1		
	50	**FAK23W50** a	4		
	65	**FAK23W65** a	4		
	80	**FAK23W80** a	4		
	100	**FAK23W100** b	5		
15.0	6	**FAK24W6**	1	11.37 (289.0)	8.83 (224.0)
	8	**FAK24W8**			
	12	**FAK24W12**			
	18	**FAK24W18**			
	20	**FAK24W20**			

a Double-barrel design.

b Triple-barrel design.

Table 6. ELF current-limiting dropout fuse catalog numbers for 27 kV 125/150 kV BIL interchangeable cutouts

Fuse rating		ELF fuse catalog number	Figure	Dimensions in inches (mm)	
Voltage (kV)	Current rating (A)			A	B
8.3	6	**FAK43W6**	1	15.16 (385.0)	12.34 (313.0)
	8	**FAK43W8**	1		
	12	**FAK43W12**	1		
	18	**FAK43W18**	1		
	20	**FAK43W20**	1		
	25	**FAK43W25**	1		
	30	**FAK43W30**	1		
	40	**FAK43W40**	1		
	50	**FAK43W50** a	4		
	65	**FAK43W65** a	4		
	80	**FAK43W80** a	4		
	100	**FAK43W100** b	5		
15.0 c	6	**FAK44W6**	1	15.16 (385.0)	12.34 (313.0)
	8	**FAK44W8**	1		
	12	**FAK44W12**	1		
	18	**FAK44W18**	1		
	20	**FAK44W20**	1		
	25	**FAK44W25**	1		
15.0	30	**FAK44W30**	1		
15.0 c	30	**FAK44W30P** a	4		
	40	**FAK44W40** a	4		
	50	**FAK44W50** a	4		
23.0	6	**FAK45W6**	1	15.16 (385.0)	12.34 (313.0)
	8	**FAK45W8**	1		
	12	**FAK45W12**	1		
	18	**FAK45W18**	1		
	20	**FAK45W20**	1		
	25	**FAK45W25** a	4		
	30	**FAK45W30** a	4		

a Double-barrel design.

b Triple-barrel design.

c 15 kV, 6 A through 25 A (single-barrel part numbers FAK44W6 through FAK44W25) and 30 A through 50 A (double-barrel part numbers FAK44W30P, FAK44W40, and FAK44W50) have been tested and approved for 17.2 kV application.

Table 7. ELF current-limiting dropout fuse catalog numbers for 38 kV, 170 kV BIL ABB ICX porcelain cutouts

Fuse rating		ELF fuse catalog number	Figure	Dimensions in inches (mm)	
Voltage (kV)	Current rating (A)			A	B
24.0	6	**FAK46W6**	1	18.55 (471.0)	15.7 (399 .0)
	8	**FAK46W8**			
	12	**FAK46W12**			
	18	**FAK46W18**			
	20	**FAK46W20**			

Additional information

Refer to the following reference literature for application recommendations:

B240-12060 CAL Fire exempt full-range, current-limiting dropout fuse reduces fire risk on distribution lines

PA132007EN Protect your upstream personnel and investment while increasing distribution reliability with the ELF fuse

R240-66-1 ELF fuse coordination tables with protected fuse links

R240-66-2 ELF fuse coordination tables with protected fuse links

R240-91-42 8.3 kV ELF fuse time-current characteristic curves

R240-91-43 15.0 kV ELF fuse time-current characteristic curves

R240-91-44 23.0 kV ELF fuse time-current characteristic curves

MN132028EN ELF current-limiting dropout fuse installation instructions

93033 Application solutions provided with ELF fuse

CP-9415 ELF certified test report

Contact your Eaton representative for more information.

Table 8. ELF fuse ratings for 15 kV UltraSIL polymer-insulated and porcelain Type L fuse cutouts

ELF fuse rating code [a]		ELF fuse ratings	
Digit 8	**Digit 9**	**Voltage (kV)**	**Current (A)**
3	A	8.3	6
3	B	8.3	8
3	C	8.3	12
3	D	8.3	18
3	E	8.3	20
3	F	8.3	25
3	G	8.3	30
3	H	8.3	40
3	J	8.3	50 [b]
3	K	8.3	65 [b]
3	L	8.3	80 [b]
4	A	15.0	6
4	B	15.0	8
4	C	15.0	12
4	D	15.0	18
4	E	15.0	20

a Replace digits 8 and 9 of the catalog number with the correct ELF fuse rating codes.

b Double-barrel design.

Note: For more information regarding the ELF fuse, refer to catalog section CA132027EN.

Table 9. ELF fuse ratings for 27 kV UltraSIL polymer-insulated and porcelain Type L fuse cutouts

ELF fuse rating code [a]		ELF fuse ratings	
Digit 8	**Digit 9**	**Voltage (kV)**	**Current (A)**
3	A	8.3	6
3	B	8.3	8
3	C	8.3	12
3	D	8.3	18
3	E	8.3	20
3	F	8.3	25
3	G	8.3	30
3	H	8.3	40
3	J	8.3	50 [b]
3	K	8.3	65 [b]
3	L	8.3	80 [b]
4	A	15.0 [c]	6
4	B	15.0 [c]	8
4	C	15.0 [c]	12
4	D	15.0 [c]	18
4	E	15.0 [c]	20
4	F	15.0 [c]	25
4	G	15.0 [c]	30 [b]
4	H	15.0 [c]	40 [b]
4	J	15.0 [c]	50 [b]
5	A	23.0	6
5	B	23.0	8
5	C	23.0	12
5	D	23.0	18
5	E	23.0	20
5	F	23.0	25 [b]
5	G	23.0	30 [b]

a Replace digits 8 and 9 of the catalog number with the correct ELF fuse rating codes.

b Double-barrel design.

c These ELF fuses have been tested and approved for a 17.2 kV application.

Note: For more information regarding the ELF fuse, refer to catalog section CA132027EN.

Eaton
1000 Eaton Boulevard
Cleveland, OH 44122
United States
Eaton.com

©2025 Eaton
All Rights Reserved
Printed in USA
Publication No. CA132027EN / Z29862
November 2025

Eaton is a registered trademark.

All other trademarks are property
of their respective owners.

Powering Business Worldwide