Specifications

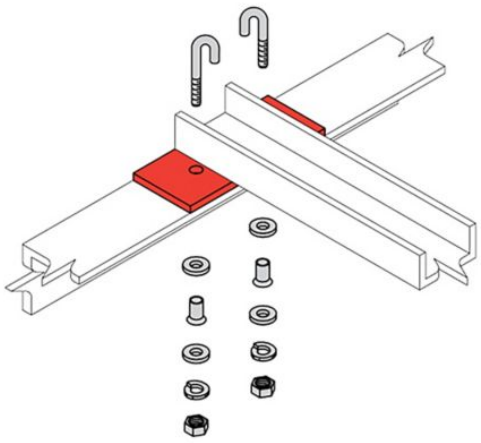

Photo is representative

Eaton SB2106B2BZ

Eaton B-Line series runway accessories, Used to secure cable runway, Includes end supports, clamps and 5?16-18 hardware, ASTM A36 structural steel, Black zinc

General specifications	
PRODUCT NAME	Eaton B-Line series runway accessories
CATALOG NUMBER	SB2106B2BZ
UPC	799038335979
PRODUCT LENGTH/DEPTH	6.5 in
PRODUCT HEIGHT	2 in
PRODUCT WIDTH	0.62 in
PRODUCT WEIGHT	2.64 lb
CERTIFICATIONS	UL Listed

Powering Business Worldwide

Product specifications

SPECIAL FEATURES	Includes end supports, clamps & 5⁄16-18 hardware
TYPE	Runway foot kit
APPLICATION	Used to secure cable runway
MATERIAL DETAILS	Black zinc ASTM A36 steel

Resources

BROCHURES	Redi-Rail runway brochure
CATALOGS	Cable runway and accessories section of datacomm catalog
SPECIFICATIONS AND DATASHEETS	Eaton Specification Sheet - SB2106B2BZ

PROJECT NAME:	
PROJECT NUMBER:	
PREPARED BY:	
DATE:	

Eaton Corporation plc
Eaton House
30 Pembroke Road
Dublin 4, Ireland
Eaton.com

Follow us on social media to get the latest product and support information.

© 2025 Eaton. All Rights Reserved.