Specifications

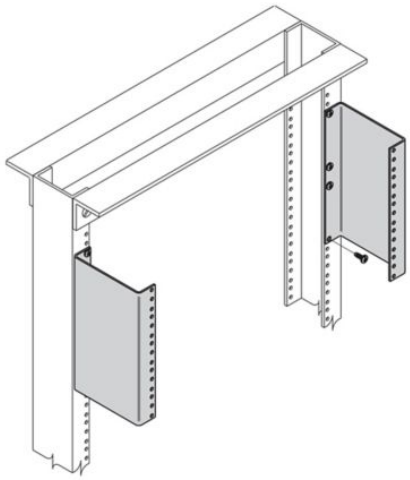

Photo is representative

Eaton SB58502TG

Eaton B-Line series open frame racks, 11 Gauge steel, Spaces: 2, Screws: 4, Telco gray powder coat, Network equipment rack standoff bracket

General specifications	
PRODUCT NAME	Eaton B-Line series open frame racks
CATALOG NUMBER	SB58502TG
UPC	799038029533
PRODUCT LENGTH/DEPTH	5 in
PRODUCT HEIGHT	3.44 in
PRODUCT WIDTH	0.13 in
PRODUCT WEIGHT	1.6 lb
CERTIFICATIONS	Not Applicable

Powering Business Worldwide

Product specifications

FINISH	Telco gray powder coat
MATERIAL	Steel
MODEL	Network equipment rack standoff bracket

Resources

BROCHURES	RCM and RCM+ brochure
SPECIFICATIONS AND DATASHEETS	Eaton Specification Sheet - SB58502TG

PROJECT NAME:	
PROJECT NUMBER:	
PREPARED BY:	
DATE:	

Eaton Corporation plc
Eaton House
30 Pembroke Road
Dublin 4, Ireland
Eaton.com

Follow us on social media to get the latest product and support information.

© 2025 Eaton. All Rights Reserved.