3M™ Cold Shrink QS4 Integrated Splice Kit QS4-15TS-2-4/0

for Tape Shield, Wire Shield, UniShield®, and Longitudinally Corrugated (LC) Cable

Instructions

IEEE Std. 404
15 kV Class
150 kV BIL

⚠ CAUTION

Working around energized systems may cause serious injury or death. Installation should be performed by personnel familiar with good safety practice in handling electrical equipment. De-energize and ground all electrical systems before installing product.

Kit Selection Table

Kit Number	Cable Insulation O.D. Range	Min. Cable Jacket O.D.	Conductor Size Range
QS4-15TS-2-4/0	0.64" - 1.01" (16,3 - 25,7 mm)	0.93" (23.6 mm)	2 - 4/0 AWG* (35 - 95 mm^2)

*Splices (including size transitions) can be made to smaller or larger conductors (but larger conductors may require special neutral handling), provided both cables are within the Insulation O.D. Range and the connector meets the dimensional requirements shown below.

Connector Dimensional Requirements

	Minimum Inches (mm)	Maximum Inches (mm)
Outside Diameter	0.40" (10,2 mm)	1.10" (28 mm)
Length Aluminum (Al/Cu) Compression	—	4.50" (114 mm)
Length Copper (Cu) Compression and 3M™ Shearbolt Connector QCI 2-250	—	5.00" (127 mm)

July 2016
78-8127-8885-5 Rev B

3M

1.0 Kit Contents

a. 3M Cold Shrink QS4 Integrated Splice Body QS4-15TS-2-4/0 (1 ea.)

b. Constant Force Springs (5 ea.)

c. 3M Red Compound P55/R Tubes (non-silicone grease) (2 ea.)

d. Scotch® Rubber Mastic Tape 2228 Rolls, 2" x 36" (2 ea.)

e. Scotch® Mastic Strips 2230, 6" length (6 ea.)

f. Cold Shrink Adapter Tubes (2 ea.)

g. 3M EMI Copper Foil Shielding Tape 1181 Strips, 1/2" x 10" (2 ea.)

h. Ground Strap (1 ea.)

i. 3M Cable Cleaning Pads CC-3 (1 ea.)

j. Cut-back Template (1 ea.)

k. Wire Brush (1 ea.)

l. Instruction Booklet (1 ea.)

Note: Cold Shrink adapter tubes may not be included in all kits.

Note: Do not use knives to open plastic bags.

Note: Connector not shown, but if included, it is indicated on the packaging label.

2.0 Prepare Cables

2.1 Check to be sure the cable fits within the kit ranges as shown on the cover page.

2.2 Prepare cables according to standard procedures. Refer to template provided or illustration below for proper dimensions *(Figure 1).*

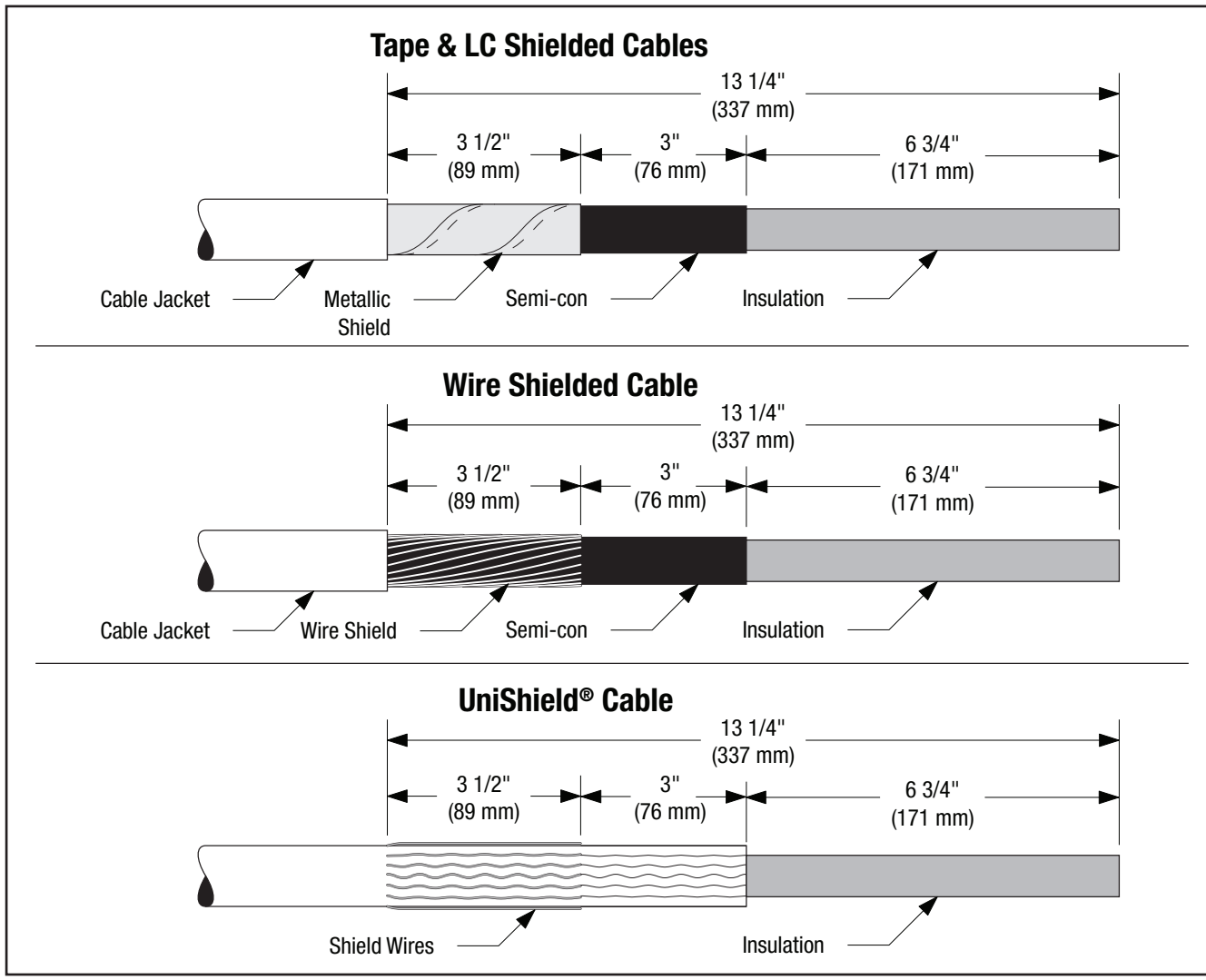

Figure 1

2.3 Secure end of each metallic shield or wires with a copper tape strip (*Figure 2*).

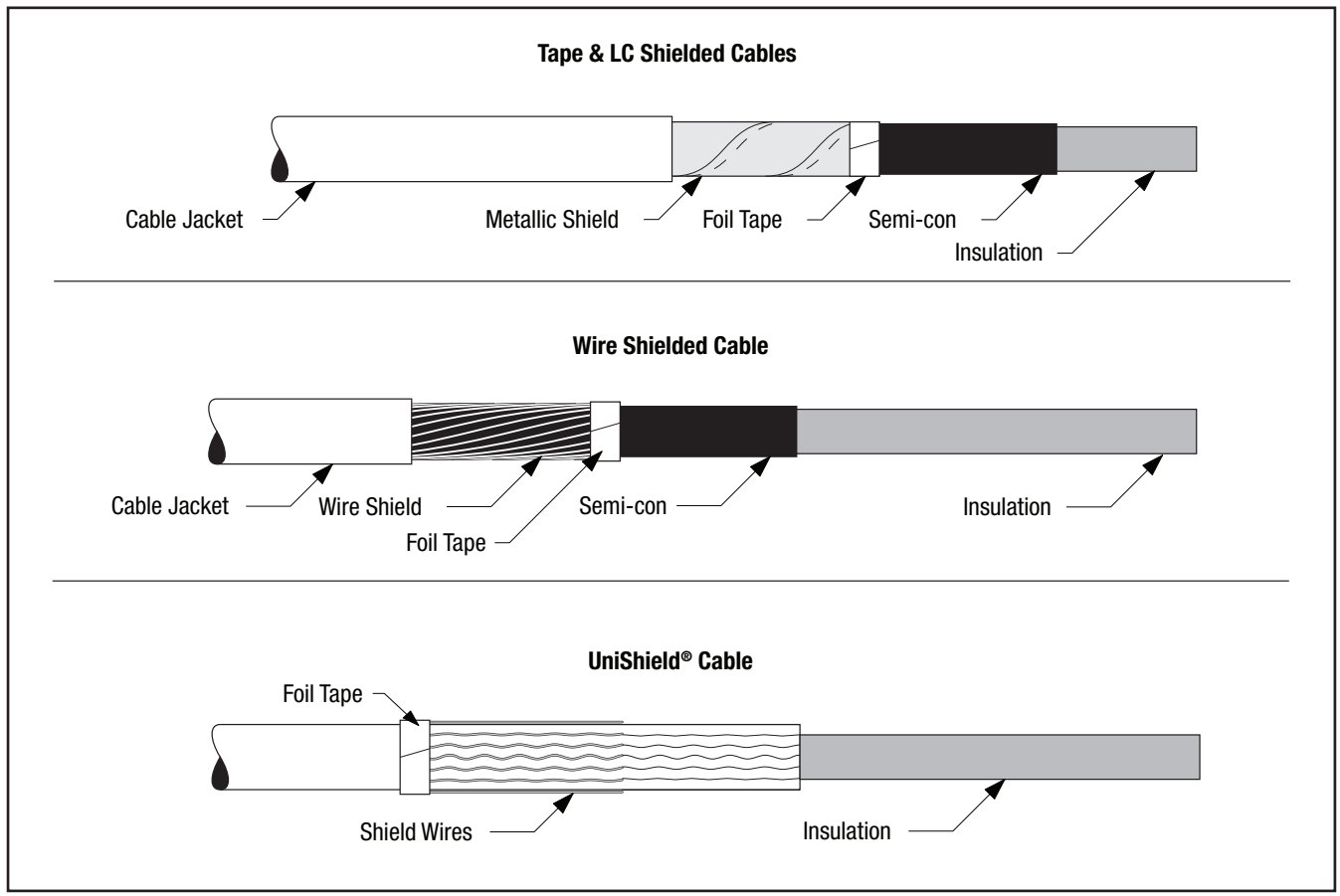

Figure 2

2.4 Clean or cover cable jacket 30" (760 mm) from jacket edge on side where splice body will be parked.

2.5 Slide integrated splice body onto clean cable jacket *(Figure 3).*

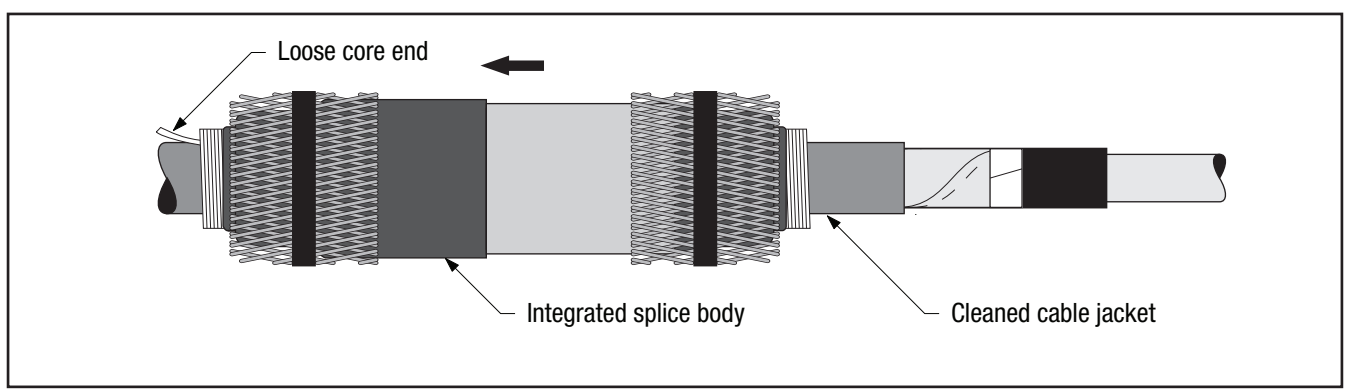

Figure 3

3.0 Install Connector

Note: If using a crimp-type connector, go to step (3.3).

3.1 If using a 3M Shearbolt Connector QCI 2-250, refer to the instructions included with the connector for insulation cut-back dimension. Insulation removal length shall not exceed 2" (51 mm) from conductor end *(Figure 4).*

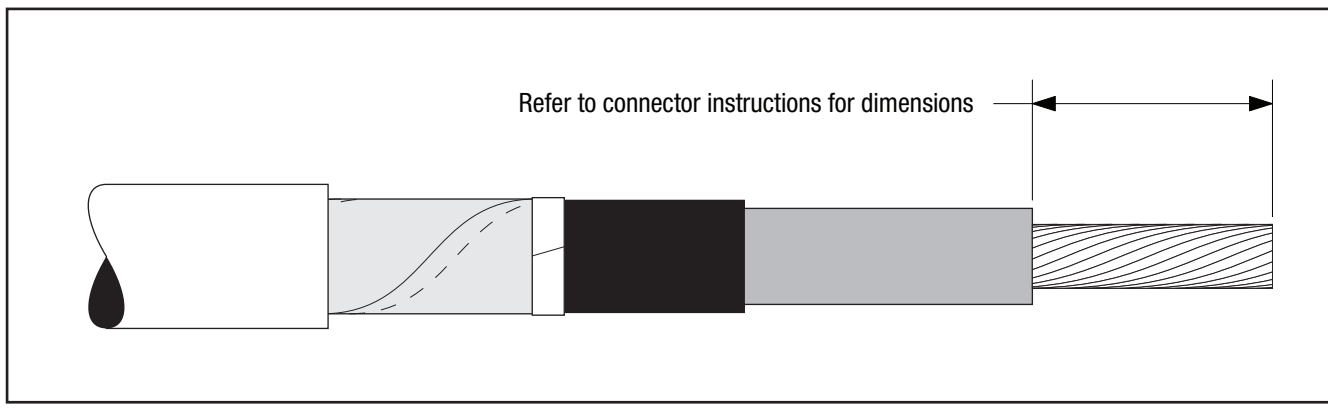

Figure 4

3.2 Install 3M Shearbolt Connector QCI 2-250 according to the instructions included with the connector *(Figure 5).*

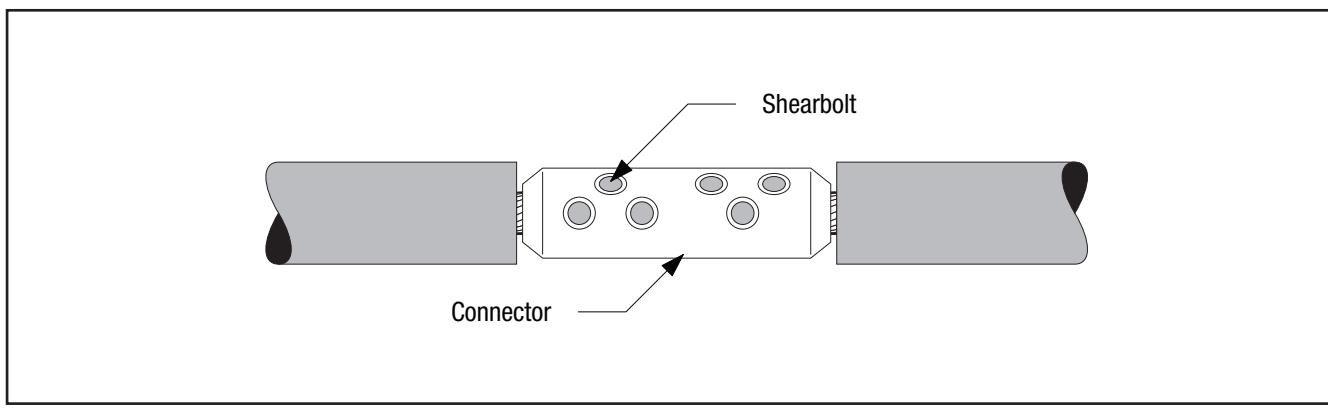

Figure 5

Go to section 4.0 "Install Splice."

3.3 **If using a crimp type connector,** remove cable insulation for 1/2 connector length plus an allowance* for increases in connector length due to crimping. Insulation removal length shall not exceed 2 1/2" (64 mm) from conductor end. **Do not install connector now** *(Figure 6).*

Note: This assumes that the installer has determined the increased length of an aluminum connector crimped with a specific tool and die.

Aluminum (Al/Cu) Crimp Connector Growth Chart

Conductor Size	Typical growth allowance (per end)
2 - 3/0 AWG	1/8" (3 mm)
4/0 AWG	1/4" (6 mm)

Note: 1) Copper connectors do not require a length change allowance.
2) Maximum aluminum connector crimped length allowed is 5.0" (127 mm).

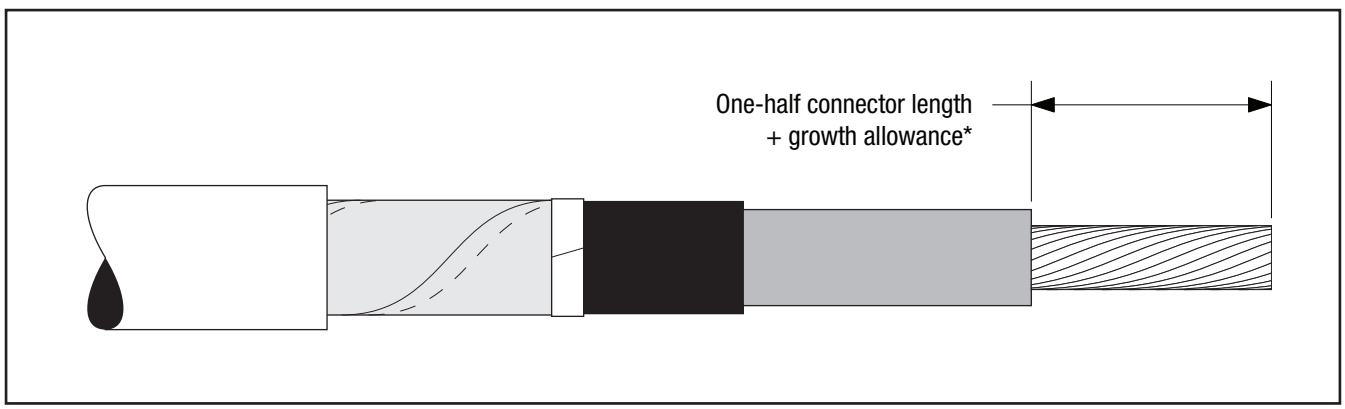

Figure 6

3.4 **For 2 through 1/0 AWG copper connectors, 2 and 1 AWG aluminum connectors , or connectors with an O.D. between 0.40 - 0.55" (10,2 - 14,0 mm):** Park the cold shrink adapter tube with the **WHITE CORE** on the insulation.

For 2/0 through 4/0 AWG copper connectors or connectors with an O.D. between 0.50 -0.64" (12,7 - 16,3 mm): Park the cold shrink adapter tube with the **RED CORE** on the insulation. (*Figure 7*).

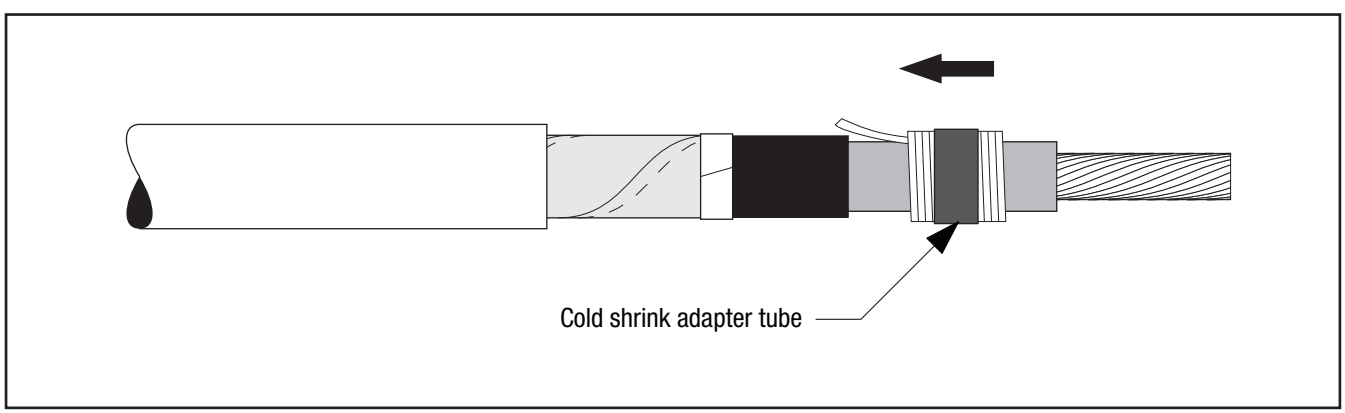

Figure 7

3.5 Install connector. See table (on cover) for proper connector dimensions. (For standard 3M Connectors, refer to table at the end of this instruction for crimping information). If using an aluminum conductor, wire brush aluminum strands and then insert into connector. Remove excess inhibitor compound and remove conductor from connector. Wire brush aluminum strands again. Insert into connector and crimp. Remove any excess oxidation inhibitor from connector ends (*Figures 8 and 9).* File sharp connector flashing, if necessary, taking care to remove all metal filings from splice area.

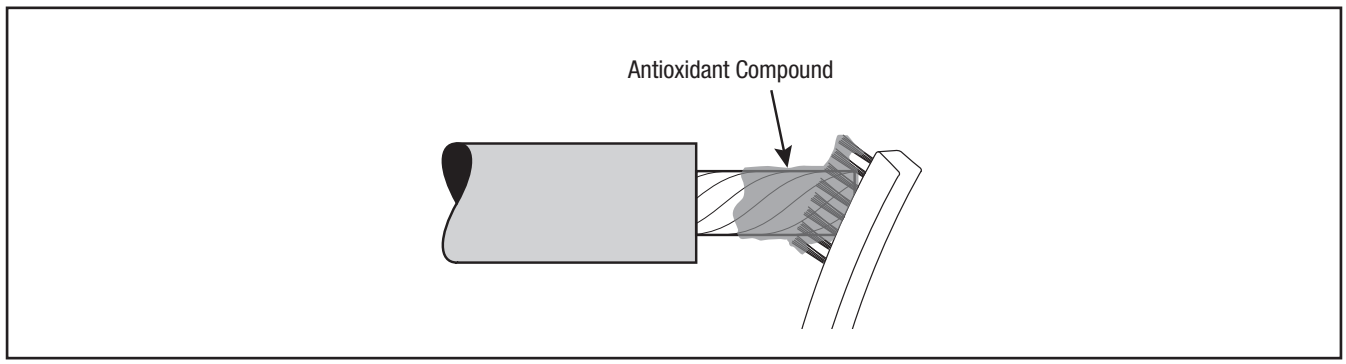

Figure 8

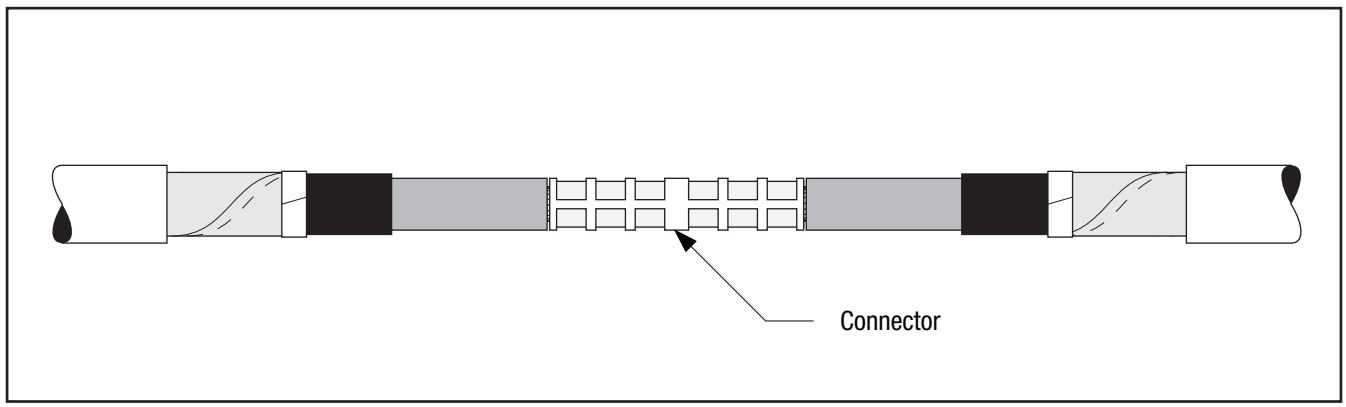

Figure 9

4.0 Install Splice

4.1 Apply a tape marker to semi-con insulation shield on cable which does not contain splice. Measure 8 1/2" (216 mm) from center of connector *(Figure 10).*

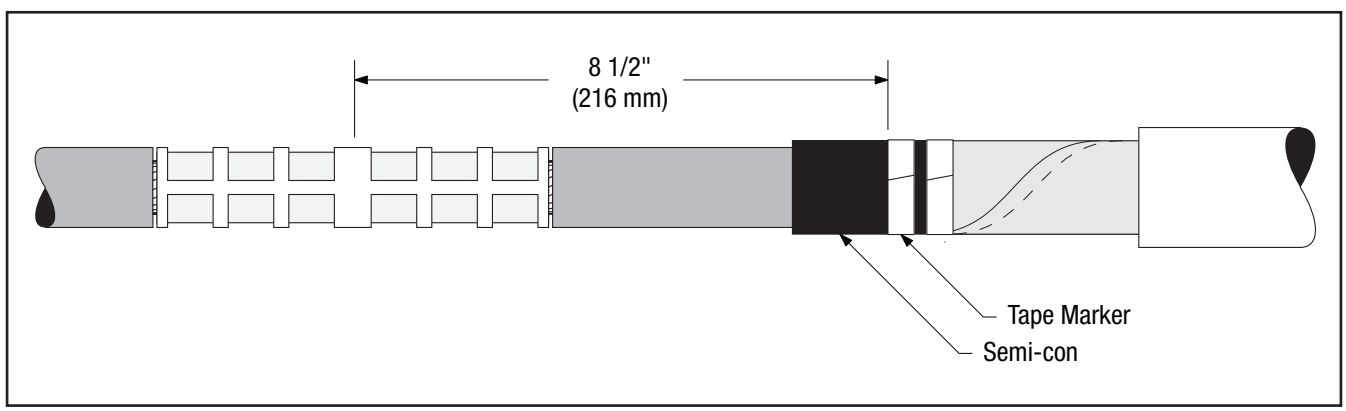

Figure 10

4.2 If using cold shrink adapter tube: Position adapter tube over the connector. Shrink adapter near the center of connector by pulling and unwinding the loose core end in a counterclockwise direction *(Figure 11).*

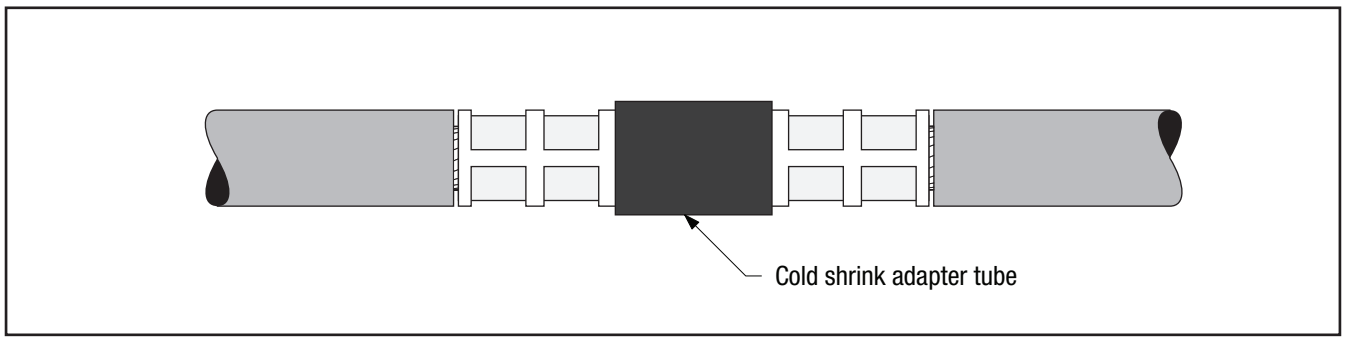

Figure 11

4.3 Clean cables using standard practice:

a. Do not allow solvent or abrasive to contact the cable semi-conductive insulation shield.

b. Do not reduce cable insulation diameter below 0.64" (16,3 mm) specified for the splice.

c. The insulation surface must be round, smooth and free of cuts/voids. Sanding may be necessary, finish sanding should be done with a 120 grit or higher electrical grade abrasive.

d. Make certain that the cable insulation is smooth, clean and dry before continuing.

4.4 Apply 3M Red Compound P55/R on cable insulations, making certain to fill in edge of cable semi-con. **Do not use silicone grease** *(Figure 12).*

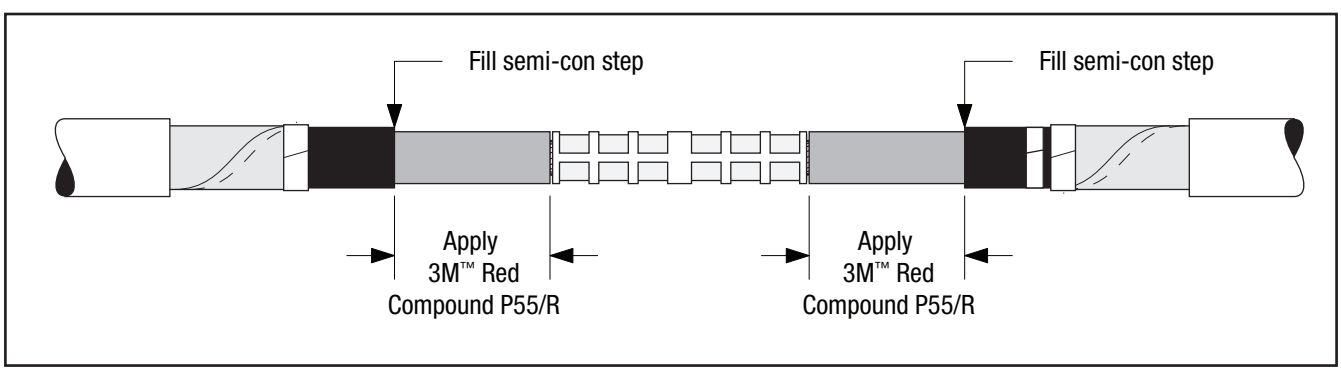

Figure 12

Note: This core installs differently than other cold shrink products.

4.5 Position the splice body over connector area, aligning end of the splice body (not the core) at the center of the tape marker. **Slowly** start to remove the splice core by pulling and unwinding the loose core end counterclockwise, allowing only ¼" (6 mm) of the splice to shrink onto the tape marker. Carefully slide the splice body off the tape marker by pulling and twisting until the entire tape marker is exposed. Continue removing the core to complete the splice body installation *(Figure 13).*

Note: The splice body ends must overlap onto the semi-con of each cable by at least 1/2" (13 mm).

Note: Do not push the splice body toward the tape marker as this may cause the end to roll under. If the end does roll under, DO NOT use sharp-edged tools to pull it out as this could cut and damage the splice.

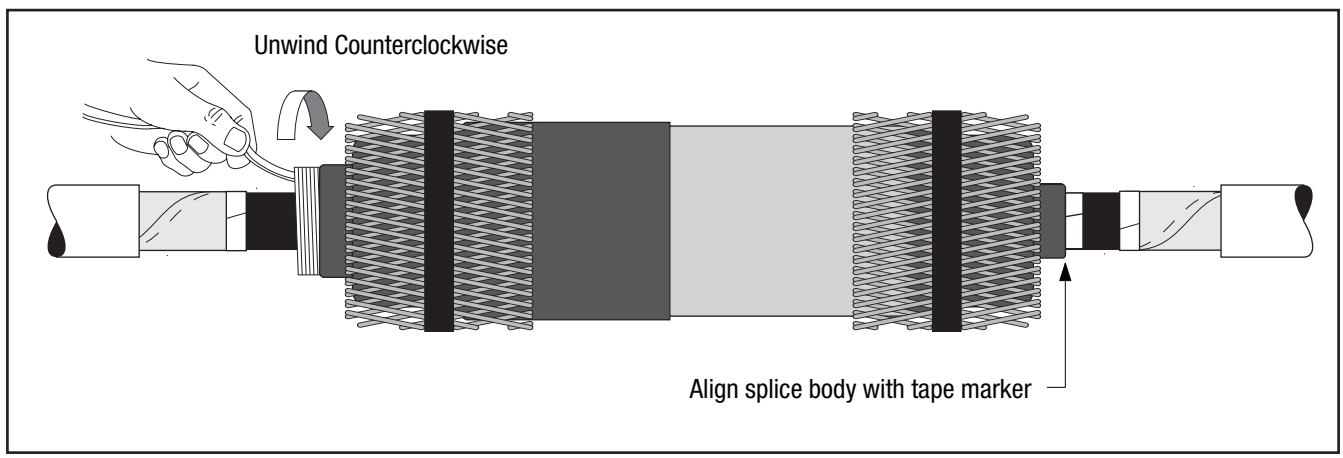

Figure 13

5.0 Connect Shielding

5.1 Remove the vinyl tape holding the shield sleeve on the rejacketing tube, and spread the shield sleeve out toward the cable jacket.

5.2 Hand-tighten the shield sleeve outward and secure it to the wires, tape or LC shields on either side of the splice using two constant force springs on each end between the jacket edge and the copper foil tape as shown *(Figure 14).*

Note: If using a ground strap for external grounding, leave room for a third constant force spring over the shield sock at the jacket end. Refer to Step (6.1).

5.3 If shield sleeve extends beyond jacket edge, it may be interwoven with the constant force springs. Cinch (tighten) the spring after wrapping the final winding *(Figure 14).*

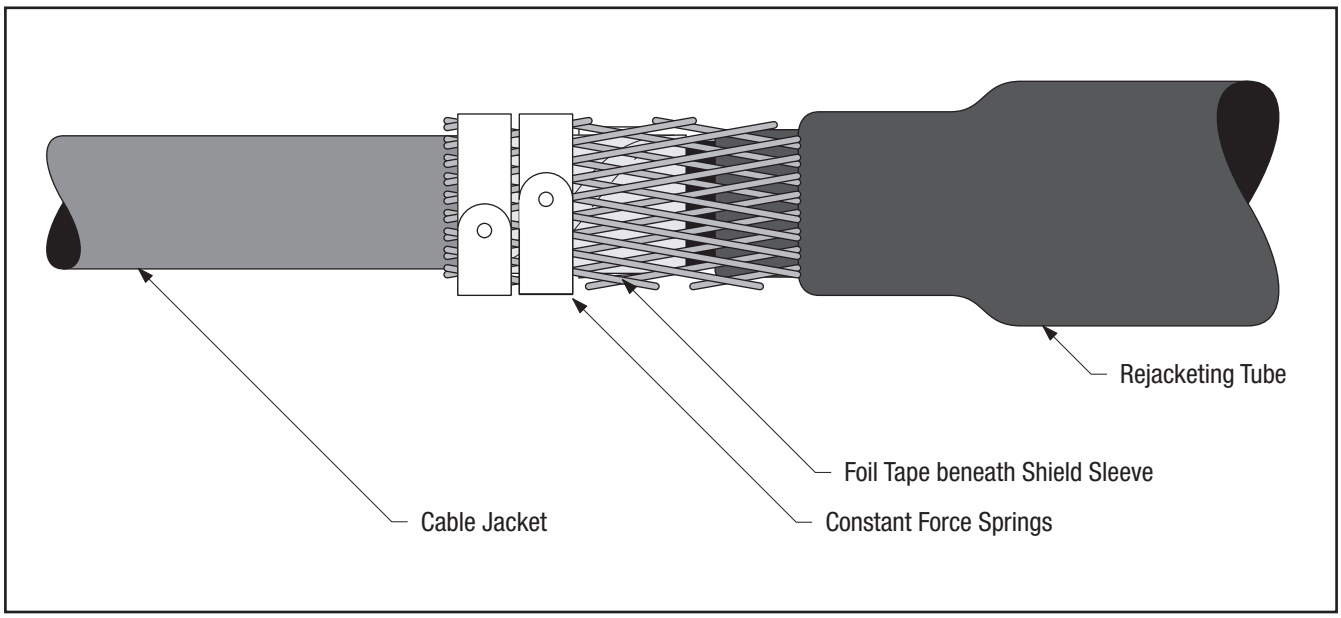

Figure 14

5.4 Wrap two half-lapped layers of vinyl tape over all constant force springs *(Figure 15).*

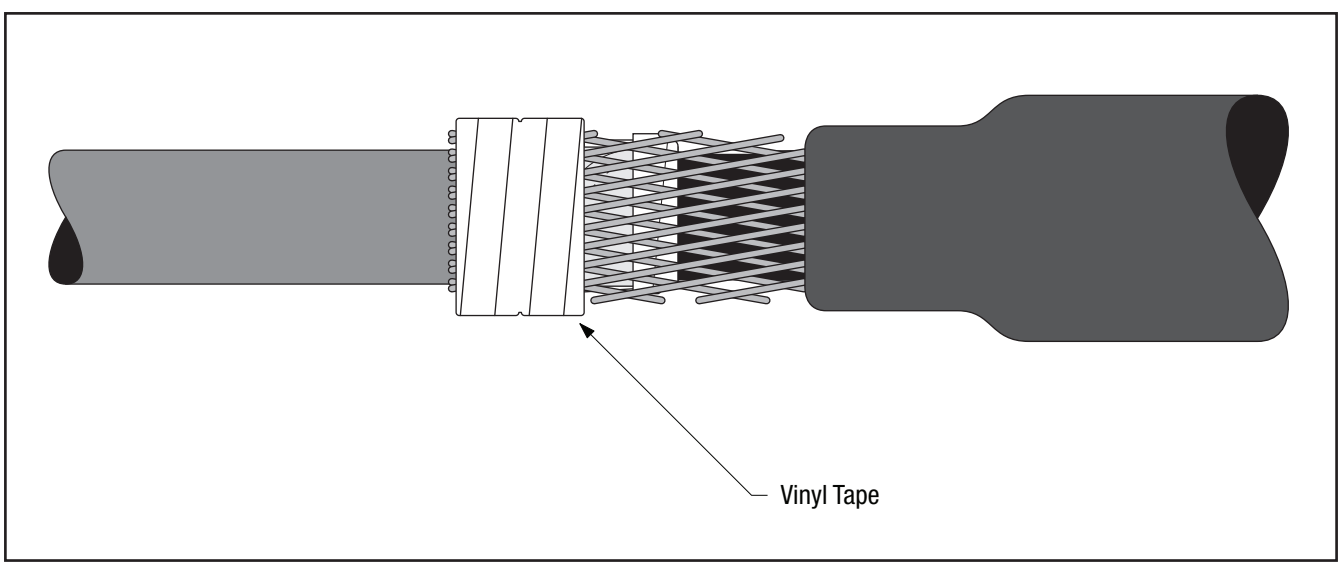

Figure 15

6.0 External Grounding (Optional)

6.1 Wrap the ground strap around the shield sleeve with the tails toward the cable jacket (*Figure 16*). Ensure that the shield sleeve is over the tape, LC, or wire shield.

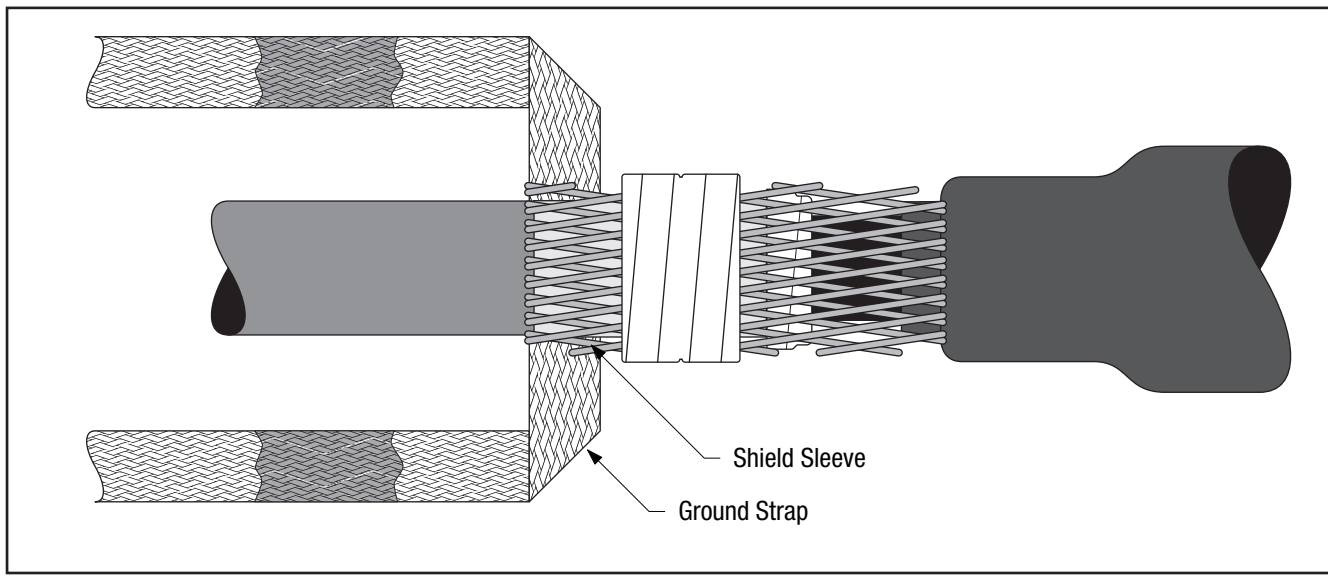

Figure 16

6.2 Secure ground strap to the shield sleeve using a constant force spring (*Figure 17*).

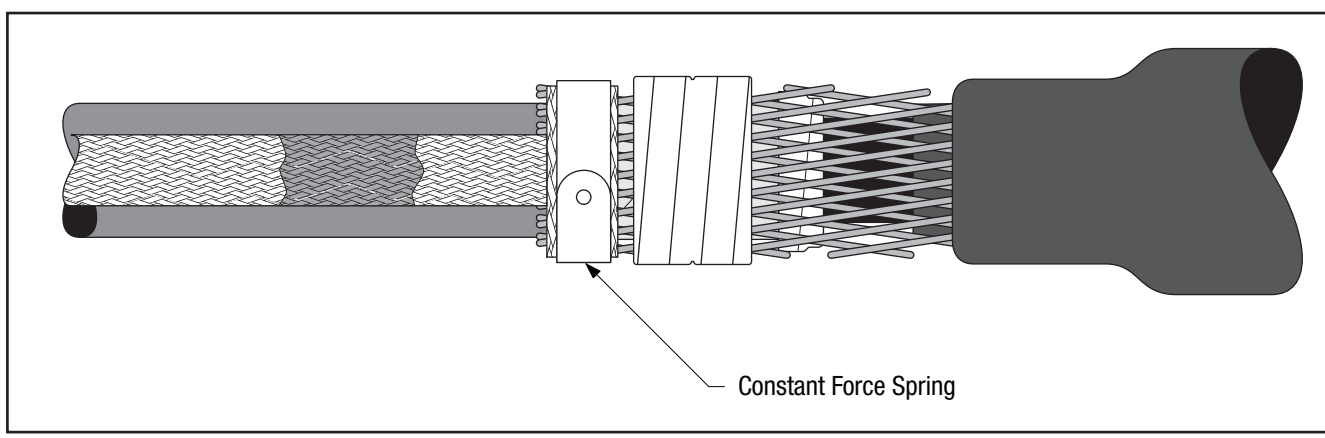

Figure 17

6.3 Overwrap the spring with two layers of stretched vinyl tape (*Figure 18*).

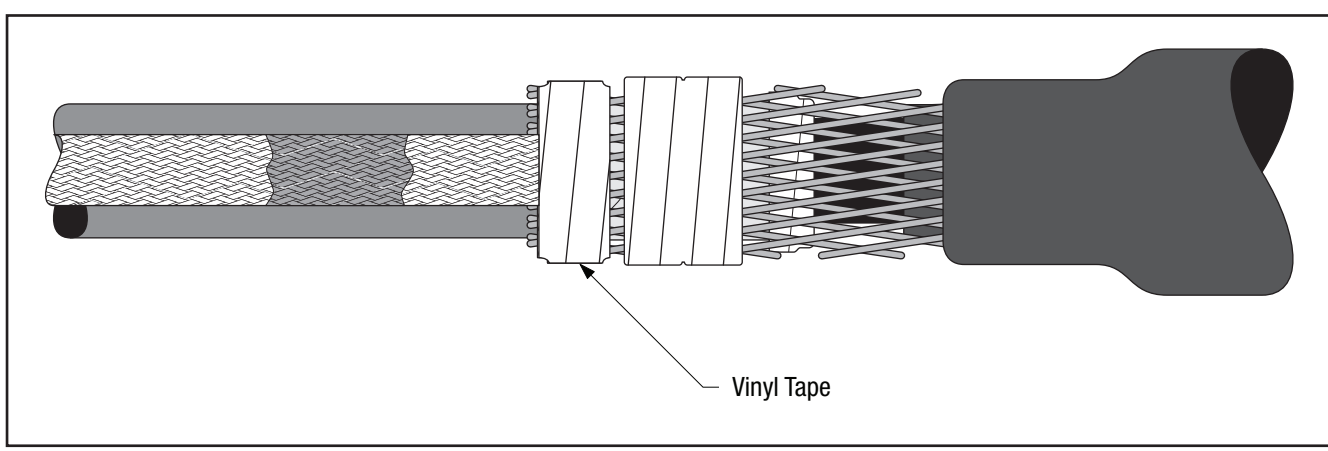

Figure 18

6.4 Place one mastic sealing strip on the cable jacket under the solder blocks of the ground strap no farther than 1/2" (13 mm) from the jacket edge (*Figure 19*).

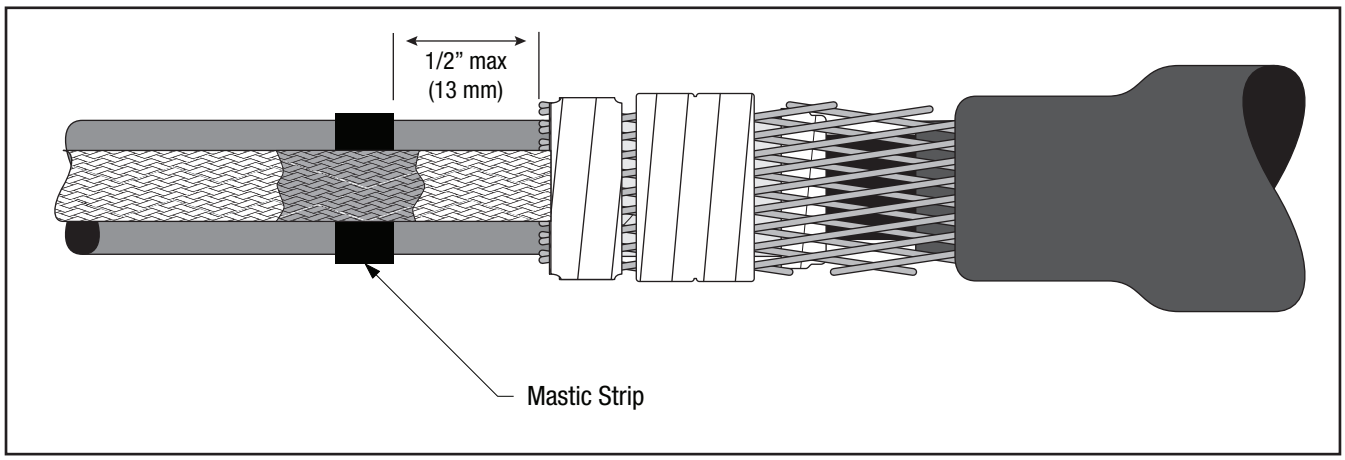

Figure 19

6.5 Place another mastic strip over the solder blocks. Press the mastic strips around the solder blocks and onto the cable jacket. If tails overlap at the solder blocks, place a piece of mastic between them (*Figure 20).*

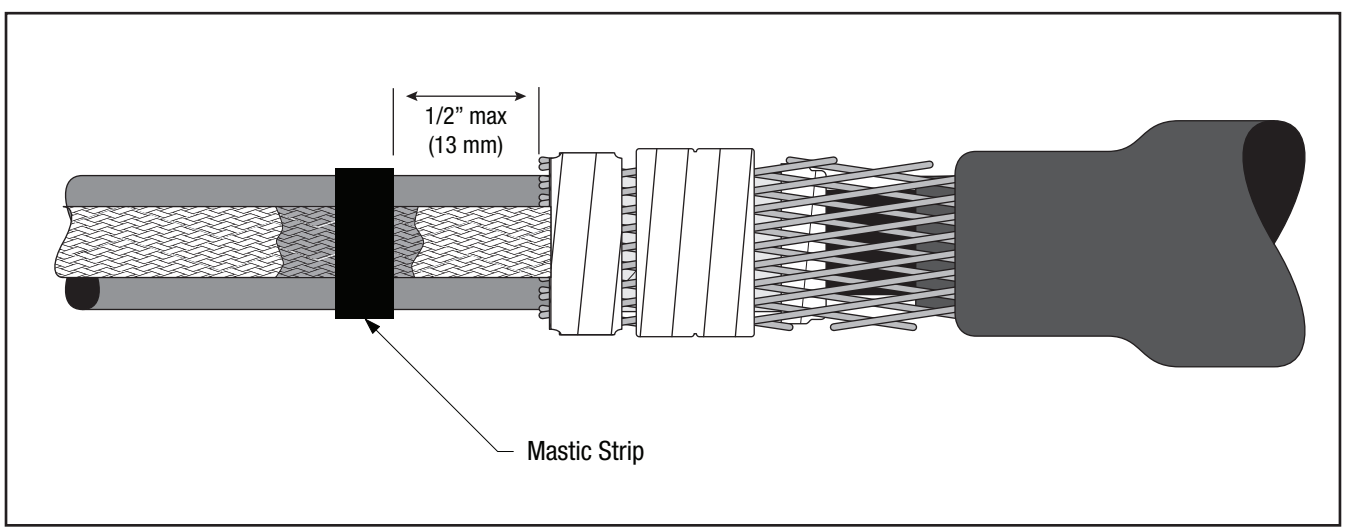

Figure 20

7.0 Install Jacket

Note: Jacketing is not optional.

7.1 Wrap a roll of slightly stretched Scotch® Rubber Mastic Tape 2228, 2" x 36" around cable jacket ends (tacky side toward cable) *(Figure 21)*. If grounding was applied, apply tape over mastic strips at solder block. Stretch and tear off last 1 - 2" (25 - 50 mm) of mastic *(Figure 22)*.

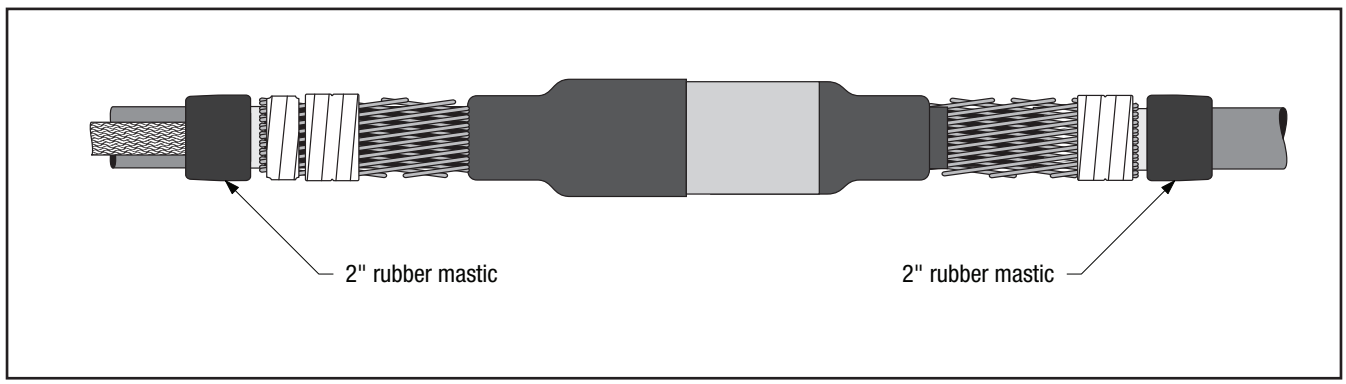

Figure 21

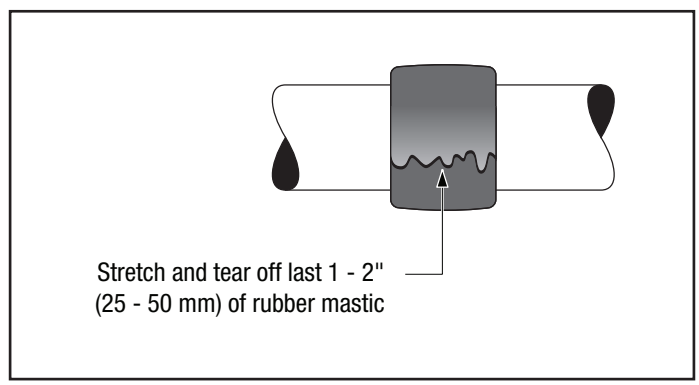

Figure 22

7.2 Install the rejacketing tube by twisting the tube (not the liner) from side to side to start the movement. Then slide and unroll the tube over the constant force springs and rubber mastic. *(Figure 23)*. Repeat on other side.

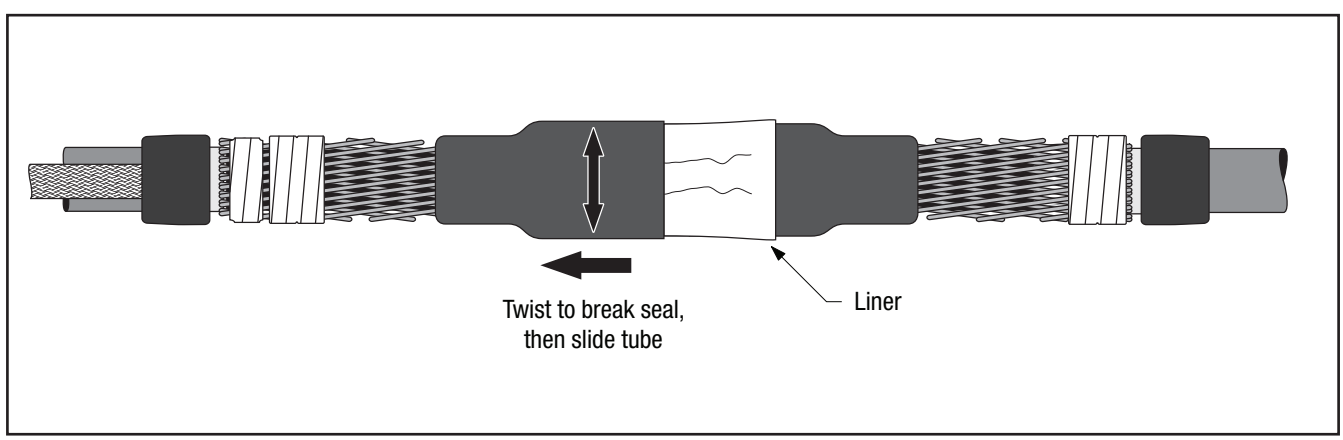

Figure 23

7.3 Remove the liners and discard.

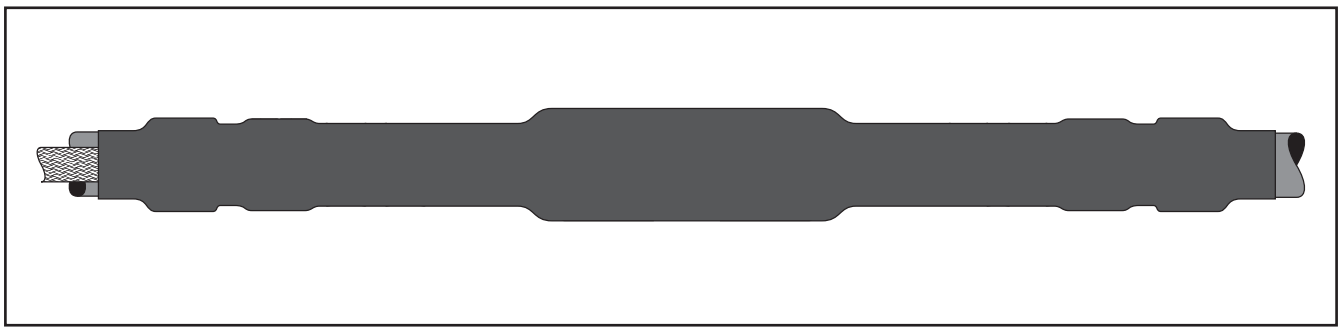

Figure 24

7.4 Connect optional grounding.

Note: ***In applications where the splice is regularly exposed to high levels of ultra-violet radiation (i.e. direct sunlight), wrap two half-lapped layers of Scotch® Super 33+™ Vinyl Electrical Tape or Scotch® Vinyl Electrical Tape Super 88 over the rejacketing tube.***

Crimping Tool - Die Sets (number of crimps/end)

3M™ Connector Number	Conductor Size (AWG or kcmil)	Burndy Corporation					Thomas & Betts Corp.			Square D Co. Anderson Div.	Kearney
		MD6	MY29	Y34A	Y35, Y39, Y45*, Y46*	Y1000**	TBM 5	TBM 8	TBM 15	VC6-3** VC6-FT**	Type O
CI-22 (Al/Cu)	2 sol.	BG (3)	---	U243 (1)	U25ART (1)	---	---	Olive(2)	50(1)	(1)	5/8-1 (3)
10003 (Cu)	2 str.	W162(2)	2 AWG(1)	A2CR(1)	U2CRT(2)	---	Brown(1)	Brown(1)	33(1)	(1)	---
20003 (Al/Cu)	2 str.	W163(3)	2AWG (1)	A2CAB(1)	UTCABT(1)	(1)	Pink(2)	Pink(2)	42H(2)	(1)	1/2 (3)
CI-21 (Al/Cu)	2 str.	BG (3)	---	U243 (1)	U25ART(1)	---	---	Olive(2)	50(1)	(1)	5/8-1 (3)
10004 (Cu)	1	---	1 AWG(1)	A1CR(1)	U1CRT(2)	---	Green(1)	Green(1)	37(1)	(1)	---
20004 (Al/Cu)	1	W163(3)	1 AWG(1)	A1CAB(1)	U1CART(1)	(1)	Gold(2)	Gold(2)	45(1)	(1)	1/2 (3)
CI-21 (Al/Cu)	1	BG (3)	---	U243 (1)	U25ART(1)	---	---	Olive(2)	50(1)	(1)	5/8-1 (3)
10005 (Cu)	1/0	W163(2)	1/0(1)	A25R(1)	U25RT(1)	---	Pink(2)	Pink(2)	42(2)	(1)	---
20005 (Al/Cu)	1/0	W241(2)	1/0(1)	A25AR(1)	U25ART(1)	(1)	Tan(2)	Tan(2)	50(1)	(1)	5/8-1 (3)
CI-1/0 (Al/Cu)	1/0	BG (3)	---	U243 (1)	U25ART(1)	---	---	Olive(2)	50(1)	(1)	5/8-1 (3)
10006 (Cu)	2/0	W241(2)	2/0(1)	A26R(1)	U26RT(2)	---	Black(2)	Black(2)	45(1)	(1)	---
20006 (Al/Cu)	2/0	BG(4)	2/0(1)	A26AR(2)	U26ART(2)	(1)	Olive(2)	Olive(2)	54H(2)	(2)	5/8-1 (3)
11006 (Cu)	2/0	W241(3)	2/0(2)	A26R(2)	U26RT(2)	---	Black(3)	Black(3)	45(2)	(2)	---
CI-2/0 (Al/Cu)	2/0	W249(3)	---	---	U28ART(2)	---	---	Blue(4)	76(2)	(2)	840 (4)
10007 (Cu)	3/0	W243(2)	3/0(1)	A27R(1)	U27RT(2)	---	Orange(2)	Orange(2)	50(1)	(1)	---
20007 (Al/Cu)	3/0	W166(4)	3/0(1)	---	U27ART(2)	(1)	Ruby(2)	Ruby(2)	60(2)	(2)	737 (3)
11007 (Cu)	3/0	W243(3)	3/0(2)	A27R(2)	U27RT(3)	---	Orange(3)	Orange(3)	50(2)	(2)	---
CI-3/0 (Al/Cu)	3/0	W249(3)	---	---	U28ART(2)	---	---	Blue(4)	76(2)	(2)	840 (4)
10008 (Cu)	4/0	BG(3)	4/0(1)	A28R(2)	U28RT(2)	---	Purple(2)	Purple(2)	54H(2)	(2)	---
20008 (Al/Cu)	4/0	W660(4)	4/0(2)	A26AR(2)	U28ART(2)	(1)	---	White(4)	66(4)	(2)	840 (4)
11008 (Cu)	4/0	BG(4)	4/0(2)	A28R(3)	U28RT(3)	---	Purple(3)	Purple(3)	54H(3)	(3)	---
CI-4/0 (Al/Cu)	4/0	W249(3)	---	---	U28ART(2)	---	---	Blue(4)	76(2)	(2)	840 (4)

*Y45 and Y46 accept all Y35 dies ("U Series"). For Y45, use PT6515 adapter. For Y46, use PUADP adapter.

**Anderson VC6-3, VC6-FT, VC8C and Burndy Y1000 require no die set.

3M, Super 33+, and Scotch are trademarks of 3M Company.

UniShield is a registered trademark of General Cable Technologies Corporation.

All other trademarks are the property of their respective owners.

Important Notice

All statements, technical information, and recommendations related to 3M's products are based on information believed to be reliable, but the accuracy or completeness is not guaranteed. Before using this product, you must evaluate it and determine if it is suitable for your intended application. You assume all risks and liability associated with such use. Any statements related to the product which are not contained in 3M's current publications, or any contrary statements contained on your purchase order shall have no force or effect unless expressly agreed upon, in writing, by an authorized officer of 3M.

Warranty; Limited Remedy; Limited Liability.

This product will be free from defects in material and manufacture at the time of purchase. **3M MAKES NO OTHER WARRANTIES INCLUDING, BUT NOT LIMITED TO, ANY IMPLIED WARRANTY OF MERCHANTABILITY OR FITNESS FOR A PARTICULAR PURPOSE.** If this product is defective within the warranty period stated above, your exclusive remedy shall be, at 3M's option, to replace or repair the 3M product or refund the purchase price of the 3M product. **Except where prohibited by law, 3M will not be liable for any direct, indirect, special, incidental or consequential loss or damage arising from this 3M product, regardless of the legal theory asserted.**

3M

Electrical Markets Division

6801 River Place Blvd.
Austin, TX 78726-9000
800.245.3573
Fax 800.245.0329
www.3M.com/electrical

Please Recycle.Printed in USA.
© 3M 2016. All Rights Reserved.
78-8127-8885-5 Rev B