ZONE	NO.	DESCRIPTION	DATE	APPRD.	LTR. NO.
	1	SUBMIT FOR RELEASE	5/7/2020	PW	
	2	UPDATED TO ADD cULus	3/29/21	PW	

SINGLE GANG EXTRA DUTY 3-1/8" DEEP METALLIC WIU COVER

WIUM1DG1	GREY
WIUM1DW1	WHITE
WIUM1DB1	BRONZE

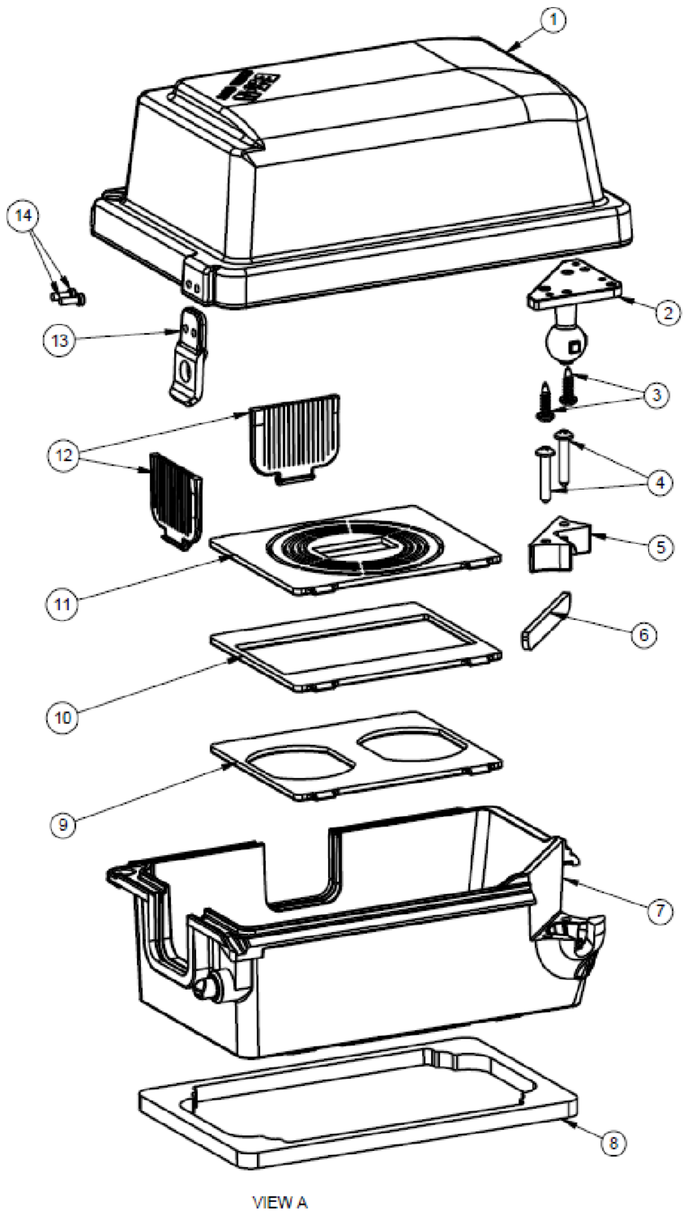

VIEW A

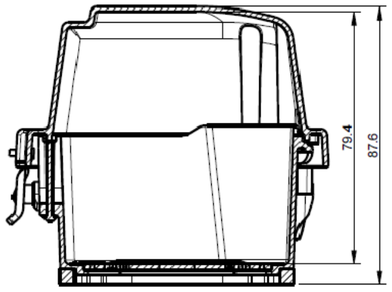

SECTION B-B
VIEW B

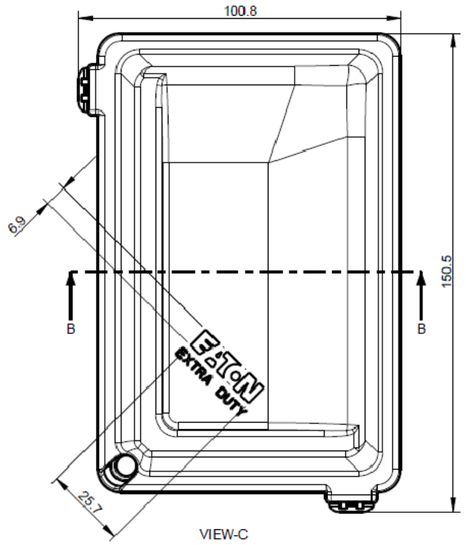

VIEW-C

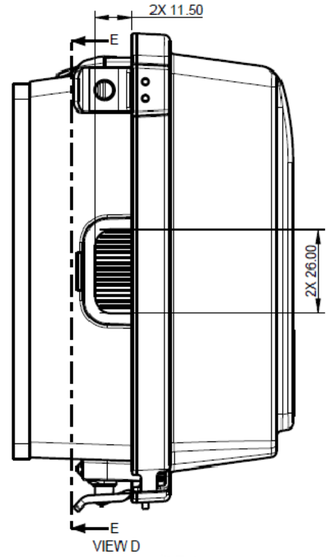

VIEW D

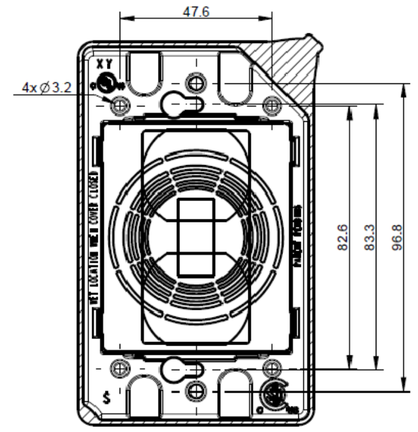

SECTION E-E
VIEW E

SR. NO.	DESCRIPTION	MATERIAL	QTY
1	LID DEEP	ALUMINUM ALLOY	1
2	BALL	POLYCARBONATE	1
3	PCT 04-040SS	STEEL	2
4	PCT 04-062	STEEL	2
5	CAP	POLYCARBONATE	1
6	BALL JOINT GASKET	POLYTHELENE FOAM	1
7	BASE	ALUMINUM ALLOY	1
8	BASE GASKET	POLYTHELENE FOAM	1
9	DUPLEX ADAPTER	POLYCARBONATE	1
10	GFCI ADAPTER	POLYCARBONATE	1
11	ROUND & SWITCH ADAPTER	POLYCARBONATE	1
12	EYELASH	ELASTOMER	2
13	SNAP	POLYCARBONATE	2
14	RIVET	STEEL	4

NOTES:

1. CERTIFICATION/LISTING:
2. ENVIRONMENTAL RATING:
   -WEATHERPROOF
   -WET LOCATION
   -NEMA 3R

THIS IS PROPERTY OF EATON AND CONTAINS CONFIDENTIAL AND TRADE SECRET INFORMATION. POSSESSION DOES NOT CONVEY ANY RIGHTS TO LOAN, SELL OR DISCLOSE SAID INFORMATION. REPRODUCTION OR USE FOR ANY PURPOSE OTHER THAN WHICH IT WAS SUPPLIED MAY NOT BE MADE WITHOUT EXPRESS WRITTEN PERMISSION OF EATON. THIS DRAWING IS ON LOAN AND IS TO BE RETURNED UPON REQUEST.

MATERIAL:

FINISH:

NEXT ASSY. | USED ON

APPLICATION

TOLERANCES UNLESS OTHERWISE SPECIFIED

	in.	mm
.X	± .1	± .3
.XX	± .01	± .13
.XXX	± .005	± .000
ANGLES	± 1.5°	± 1.5°

DIM AND TOL IN ACCORDANCE WITH ASME Y14.5 2009.

THIRD ANGLE PROJECTION

UNLESS OTHERWISE SPECIFIED, ALL PRIMARY DIMENSIONS ARE IN INCHES. DIMENSIONS IN [ ] ARE IN MILLIMETERS.

ORIGINAL DATE	05/4/2020
REDRAWN DATE	
DRAWN BY	TAK
CHECKED BY	
APPROVED BY	
APPROVED BY	

EATON CROUSE-HINDS SERIES

TITLE: WIU COVER, METALIC
1 GANG EXTRA DUTY 3-1/8" DEEP
FIRST MADE FOR WEATHERPROOF

SIZE	CODE IDENT. NO.		REV.
C		WIU	2
SCALE 1:1	WT.	SHEET 1 OF 1	

SW_REV 11/2015

CCHSY-SW-Template-C

DO NOT SCALE DRAWING