

CONNECTION DIAGRAM

RATING: 350VA 50/60HZ
(TRIPLE RATED)
TEMP.CLASS 105
PRI. 208/230/460 VOLTS
SEC. 24/115 VOLTS

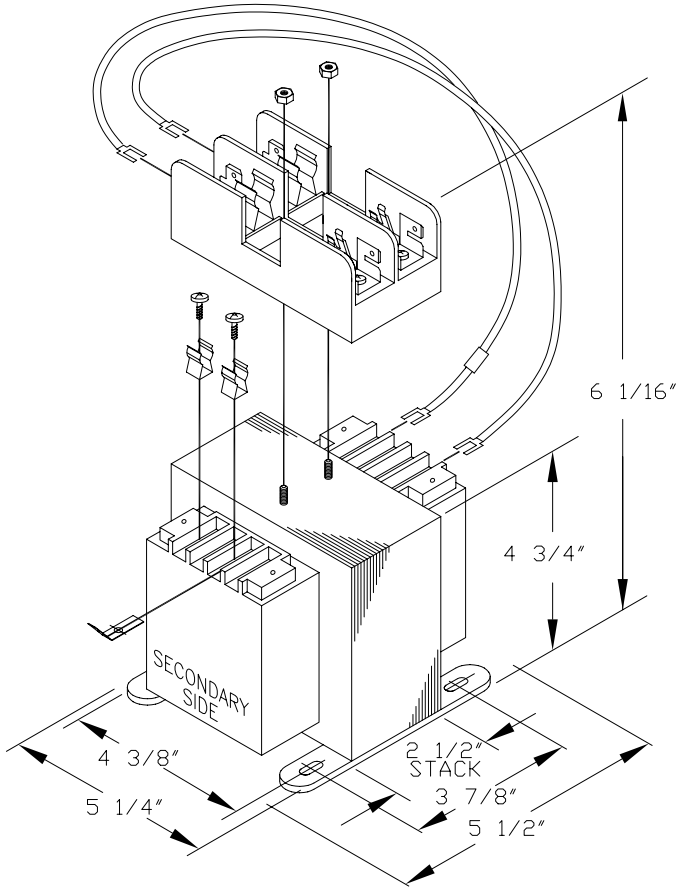

REVISION	DT
1	

UNLESS OTHERWISE SPECIFIED
DIMENSIONS IN INCHES

ONE PLACE DEC	±0.1
TWO PLACE DEC	±0.02
THREE PLACE DEC	±0.005
ANGLES	±0.5
VOLTAGE	±5%
RESISTANCE	±10%
AMPERAGE	±2%
FORCE,TORQUE,SPEED	±10%
TIME	±1%
TEMPERATURE	±3°C/±5°F

DIMENSIONS TO BE INTERPRETED IN ACCORDANCE WITH ASME Y14.5M-1994

(X.XX±XX) SYMBOL DEFINITIONS (ST) PER DRAWING 65A2750

THIRD ANGLE PROJECTION

DRAFTER/DESIGNER	S.CASTRO	DATE 06/30/09
APPD	E.ROBLES	DATE 06/30/09
APPD	O.SANDOVAL	DATE 06/30/09
ENGR REF		
NEXT ASSY		
TOOL REF		
DSPEC		

EATON CORPORATION – CONFIDENTIAL AND PROPRIETARY

NOTICE TO PERSONS RECEIVING THIS DOCUMENT AND/OR TECHNICAL INFORMATION
THIS DOCUMENT, INCLUDING THE DRAWING AND INFORMATION CONTAINED THEREON, IS CONFIDENTIAL AND IS THE EXCLUSIVE PROPERTY OF EATON CORPORATION, AND IS MERELY ON LOAN AND SUBJECT TO RECALL BY EATON AT ANY TIME. BY TAKING POSSESSION OF THIS DOCUMENT, THE RECIPIENT ACKNOWLEDGES AND AGREES THAT THIS DOCUMENT CANNOT BE USED IN ANY MANNER ADVERSE TO THE INTERESTS OF EATON AND THAT NO PORTION OF THIS DOCUMENT MAY BE COPIED OR OTHERWISE REPRODUCED WITHOUT THE PRIOR WRITTEN CONSENT OF EATON. IN THE CASE OF CONFLICTING CONTRACTUAL PROVISIONS, THIS NOTICE SHALL GOVERN THE STATUS OF THIS DOCUMENT.

TITLE
CONTROL
TRANSFORMER
FINAL ASSEMBLY

SIZE	DWG NO	
B	C0350E5EFB.DWG	C0350E5EFB

SCALE	PARTS LIST	PRODUCT CODE	SHEET NO
		1	OF 1

EAD_ACAD_FRMB1
REV. 05/03/08

© 2008 Eaton Corporation, All Rights Reserved