Pauluhn 707/717/727 hazardous area globes and guards

Cl. I, Div. 2, Groups A, B, C, D
Cl. I, Zone 2, Groups IIA, IIB, IIB + H_2, IIC
Type 4X
Conforms to IP66

Applications:

- Ceiling, pendant and wall mount types
- Marine and watertight requirements
- Oil and gas exploration and production
- Petrochemical facilities[A]
- Pharmaceutical and additives formulation and processing[A]
- Pipeline compressor/pumping and storage[A]
- Surface mining[A]
- Wastewater treatment plants[A]

Features:

- Up to 150 watt incandescent
- High temperature silicone gasket provides a watertight seal
- Four-pole terminal block
- Protective guard provided

Certifications and compliances:

- Class I, Division 2, Groups A, B, C, D
- Class I, Zone 2, Groups IIA, IIB, IIB + H_2, IIC
- UL844 – Hazardous Locations
- UL1598A – Luminaires for Marine Vessels
- Type 4X
- Conforms to IP66
- Marine Outside Type Saltwater
- ABS

Standard materials:

- Housing and guard – cast copper-free aluminum or cast marine brass (see listings)
- Hardware – stainless steel
- Gasket – one-piece silicone
- Lamp holder – high temperature PBT with nickel-plated copper screw shell
- Globe – clear glass; tempered glass (optional)

Technical specifications:

- Entries – ceiling and wall mount supplied drilled and tapped with four ¾" NPT outlets and three plugs; pendant mount supplied with ¾" NPT
- Lamp holder – medium base; shockproof (optional)
- Lamp type – A-21, 150 watt incandescent (lamp not provided)
- Voltage – rated to 250V
- Terminal block – 4-pole, 20 ampere terminal block housed in junction box

Mounting options:

- Ceiling, pendant or wall mount; intended for lamp base-up mounting

Options:

Description	Suffix
• Shockproof lamp holder	**SP**
• Heat-resistant clear glass globe	**HR**

Temperature performance data:

- T2D at 40°C ambient
- Supply wire 90°C

Photometrics:

- Refer to www.eaton.com (under the Resources tab of each product family) for specific photometric IES files



Aluminum



Brass

Ordering information:

Cat. #	Description	Material	Weight (lbs.)
707AM7D2	Wall mount/junction box	Aluminum	3.1
717AM7D2	Ceiling mount/junction box	Aluminum	2.5
727AM7D2	Pendant mount/junction box	Aluminum	2.6
707BM7D2	Wall mount/junction box	Brass	7.8
717BM7D2	Ceiling mount/junction box	Brass	6.3
727BM7D2	Pendant mount/junction box	Brass	6.5

[A]Applicable for aluminum models only.

Copyright© 2022 Eaton

Pauluhn 707/717/727 hazardous area globes and guards

Cl. I, Div. 2, Groups A, B, C, D
Cl. I, Zone 2, Groups IIA, IIB, IIB + H_2, IIC
Type 4X
Conforms to IP66

Dimensions (in inches):

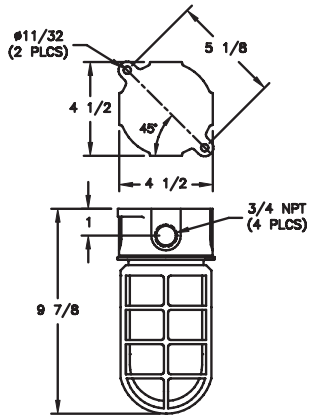

Ceiling mount

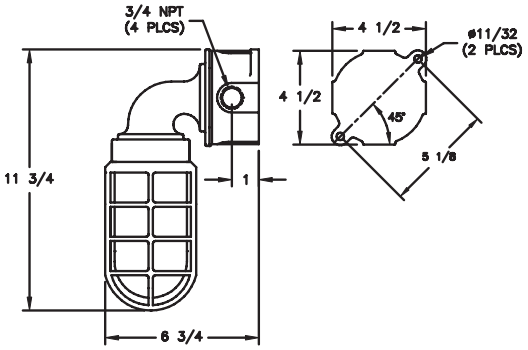

Wall mount

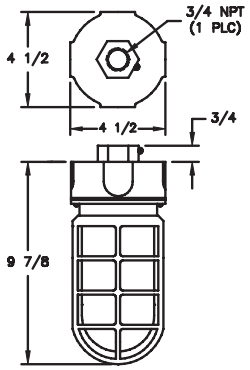

Pendant mount

 Copyright© 2022 Eaton