Powering Business Worldwide™

2010-12-10

5011697701-ERS1

Eaton Logic Controller

Modbus Distributed I/O Adapter Module **INSTRUCTION SHEET**

[Applicable Distributed I/O Adapter Module]

- ELC-CARS485

IL05004008E
002-1214020-02

Thank you for choosing the Eaton Logic Controller (ELC) series products. The ELC-CARS485 is a Modbus Serial distributed I/O adapter module that connects ELC I/O modules to Modbus RS-485 networks. The adapter provides I/O and module diagnostic information to Modbus scanners.

- This instruction sheet provides information on the electrical specifications, functionality, installation and wiring for this module. It should be read and understood before attempting to install or use the module.
- Additional information can be found in the ELC series Programming Manual.
- The ELC should be kept in an enclosure away from airborne dust, humidity and vibration.
- DO NOT disconnect equipment unless power has been switched off or the area is known to be non hazardous.
- DO NOT connect AC power to any of the DC input / output terminals, as it will damage them. Check all wiring prior to power up.
- Ensure that the ground terminal ⏚ is correctly grounded in order to prevent electromagnetic interference.

■ Product Profile & Outline

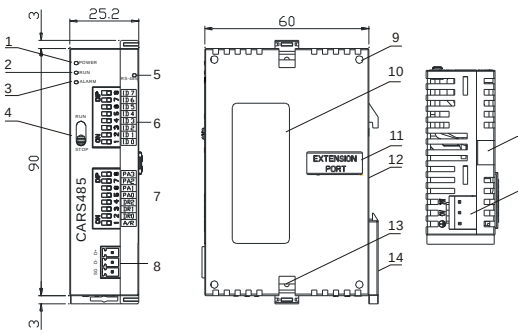

Unit: mm

1.	POWER indicator	9.	Mounting hole for extension unit
2.	RUN indicator	10.	Nameplate
3.	ALARM indicator	11.	Extension port for extension unit
4.	RUN/STOP switch	12.	DIN rail slot (35mm)
5.	RS485 indicator	13.	Fastening hole for extension unit
6.	Address setup DIP switch	14.	DIN rail clip
7.	Communication mode setup DIP switch	15.	Mounting rail for extension unit
8.	RS-485 communication port	16.	Power input

◆ Switch Definition: RUN/STOP

Status	Explanation
RUN	1. RUN indicator on ELC-CARS485 is On. 2. Analog I/O modules are in RUN status.

Status	Explanation
RUN → STOP	1. Analog I/O modules are switched from RUN to STOP status. 2. Outputs on digital output modules are turned off.
STOP	1. RUN indicator on ELC-CARS485 is Off. 2. Analog I/O modules are in STOP status. 3. Communication control is not allowed to analog I/O modules 4. Communication control is not allowed to digital I./O modules
STOP → RUN	1. ELC-CARS485 re-detects the number of digital I/O points and the number of Analog modules. 2. Analog I/O modules are switched from STOP to RUN status.



◆ Address Setup DIP Switch

DIP Switch Setting	Explanation
H'01 ~ H'F0	For valid ELC-CARS485 address, the definition of ID0 ~ ID7 are: 2^0, 2^1, 2^2, … 2^6 , 2^7 .
H'00, H'F1 ~ H'FF	In the Modbus protocol, H'00 is defined as broadcast mode. H'F1 ~ H'FF are not valid ELC-CARS485 addresses.



◆ Communication Mode Setup DIP Switch

PA3	PA2	PA1	PA0	A/R	Communication mode
OFF	OFF	OFF	OFF	ON	7,E,1-ASCII
OFF	OFF	OFF	ON	ON	7,O,1-ASCII
OFF	OFF	ON	OFF	ON	7,E,2-ASCII
OFF	OFF	ON	ON	ON	7,O,2-ASCII
OFF	ON	OFF	OFF	ON	7,N,2-ASCII
OFF	ON	OFF	ON	ON	8,E,1-ASCII
OFF	ON	ON	OFF	ON	8,O,1-ASCII
OFF	ON	ON	ON	ON	8,N,1-ASCII
ON	OFF	OFF	OFF	ON	8,N,2-ASCII
OFF	ON	OFF	ON	OFF	8,E,1-RTU
OFF	ON	ON	OFF	OFF	8,O,1-RTU
OFF	ON	ON	ON	OFF	8,N,1-RTU
ON	OFF	OFF	OFF	OFF	8,N,2-RTU
Other settings of PA3, PA2, PA1, PA0 and A/R will be regarded as invalid.					

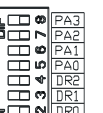

DR2	DR1	DR0	Series Transmission speed
OFF	OFF	OFF	1,200 bit/s
OFF	OFF	ON	2,400 bit/s
OFF	ON	OFF	4,800 bit/s
OFF	ON	ON	9,600 bit/s
ON	OFF	OFF	19,200 bit/s
ON	OFF	ON	38,400 bit/s
ON	ON	OFF	57,600 bit/s
ON	ON	ON	115,200 bit/s

◆ Function Codes Supported by ELC-CARS485:

ELC-CARS485 complies with the standard Modbus protocol, supporting the 7 function codes, H'01, H'02, H'03, H'05, H'06, H'0F, and H'10. Please refer to the standard Modbus protocol for the specific data format of each function code.

Function code	Function	Data type	Applicable address
H'01	Read the output status of bit device	bit	DO area: H'0500 ~ H'057F
H'02	Read the input status of bit device	bit	DI area: H'0400 ~ H'047F
H'03	Read register	word	Special function area: H'0000 ~ H'001F
			CR of the 1st Analog module: H'1600 ~ H'1630
			CR of the 2nd Analog module: H'1640 ~ H'1670
			CR of the 3rd Analog module: H'1680 ~ H'16B0
			CR of the 4th Analog module: H'16C0 ~ H'16F0
			CR of the 5th Analog module: H'1700 ~ H'1730
			CR of the 6th Analog module: H'1740 ~ H'1770
H'03	Read register	word	CR of the 7th Analog module: H'1780 ~ H'17B0
			CR of the 8th Analog module: H'17C0 ~ H'17F0
H'05	Write single datum into bit device	bit	DO area: H'0500 ~ H'057F
H'06	Write single datum into register	word	RUN/STOP ELC-CARS485 module: H'0003
			Applicable to CR with write attribute in the 1st ~ 8th Analog module.
H'0F	Write many data into bit device	bit	DO area: H'0500 ~ H'057F
H'10	Write many data into register	word	RUN/STOP ELC-CARS485 module: H'0003
			Applicable to CR with write attribute in the 1st ~ 8th Analog module.

Example: Use function code 03 to read CR0 and CR1 in the 1st Analog module: (ASCII mode)

The request message sent from master ELC to ELC-CARS485 is ": 01 03 16 00 00 02 E4 CR LF"

The responding message sent from ELC-CARS485 to the master ELC is ": 01 03 04 00 88 00 00 70 CR LF"

Note:

1. *ELC-CARS485 can only read and write one Analog module at a time.*
2. *ELC-CARS485 is able to read/write a maximum of 16 words at a time in the communication control.*

■ Function Specifications

◆ Communication

Transmission method	RS-485
Electrical isolation	500VDC
Type	Removable 3-pin connector
Transmission cable	2 twisted isolation cables
Valid communication address	1 ~ F0 (decimal: 1 ~ 240)
Series transmission speed	1,200 / 2,400 / 4,800 / 9,600 / 19,200 / 38,400 / 57,600 / 115,200 bps (bits per second)
Communication mode	7,E,1-ASCII / 7,O,1-ASCII / 7,E,2-ASCII / 7,O,2-ASCII / 7,N,2-ASCII / 8,E,1-ASCII / 8,O,1-ASCII / 8,N,1-ASCII / 8,N,2-ASCII / 8,E,1-RTU / 8,O,1-RTU / 8,N,1-RTU/ 8,N,2-RTU

◆ Electrical Specifications

Power supply voltage	24VDC (-15% ~ 20%) (with DC input polarity reverse protection)

◆ Environmental Specifications

Noise Immunity	ESD (IEC 61131-2, IEC 61000-4-2): 8KV Air Discharge, 4KV Contact Discharge EFT (IEC 61131-2, IEC 61000-4-4): Power Li4ne: 2KV, Digital I/O: 1KV Analog & Communication I/O: 1KV Damped-Oscillatory Wave: Power Line: 1KV, Digital I/O: 1KV RS (IEC 61131-2, IEC 61000-4-3): 80MHz ~ 1000MHz , 1.4GHz ~ 2.0GHz , 10V/m
Environment	Operation: 0°C ~ 55°C (temperature), 50 ~ 95% (humidity), pollution degree 2; Storage: -25°C ~ 70°C (temperature), 5 ~ 95% (humidity)
Vibration/ Shock Resistance	Standard: IEC61131-2, IEC 68-2-6 (TEST Fc)/IEC61131-2 & IEC 68-2-27 (TEST Ea)
Certificates	CE cULus

■ LED Indication and Trouble shooting

◆ POWER Indicator

LED Status	Indication	How to deal with
Off	No power or power failure	Verify the power to the unit as well as all connections. If the power and connections are good, replace the module.
Constantly On (green)	Supply power of ELC-CARS485 is normal	-

◆ RUN Indicator

LED Status	Indication	How to deal with
Off	ELC-CARS485 and the connected Analog modules are in STOP status.	-
Constantly On in green	ELC-CARS485 and the connected Analog modules are in RUN status.	-

◆ ALARM Indicator

LED Status	Indication	How to deal with
Constantly On (red)	Incorrect communication format	Reset to the communication format supported by ELC-CARS485 and re-power the module after the setup.
	Incorrect station No.	Check if the station No. is valid.
	1. No extension unit connected 2. More than 8 extension unit connected 3. More then 128 I/O points in the extension unit.	1. Make sure the extension unit is correctly connected. 2. Make sure the number of connected extension units is 8 or less. 3. Make sure the number of digital I/O points is less than128.

◆ RS-485 Indicator

LED Status	Indication	How to deal with
Red light flashes during communication	The LED will flash once for each message transmitted between the ELC-CARS485 and the master.	-