Console
Type 12 - AW-12
Data Sheet and Catalog Number



Application
- Houses electrical controls and instruments
- Designed with an angled top and front surface for pushbuttons, pilot lights, switches or other monitoring devices
- Protects against circulating dust, falling dirt and dripping non-corrosive liquids

Standards
- UL 508A listed, Type 12
- CSA C22.2 No.94 certified, Type 12
- Conforms to NEMA standard for Type 12

Finish
- Wash and phosphate undercoat
- ANSI 61 gray polyester powder finish
- Optional top assembly and writing desk have an ANSI 61 gray polyester powder finish
- Panels have a white enamel finish

Accessories
- Terminal blocks
- Caster kit
- Touch-up paint
- See Accessories section
- Replacement handle, 25228C, see page 426

Construction
- Console body, panel cover and door, top assembly and writing desk are fabricated from (14) gauge steel
- All continuous welded seams are finished smooth
- Panel cover is secured to the body with a continuous hinge along the front side and captive screws which thread into sealed well nuts on the other three sides
- Cover stops allow the panel cover to be held in the open position
- Consoles 36 inches wide or less have a single front access door with a heavy-duty continuous hinge on one side and 3-pt locking handle on the opposite side
- Consoles wider than 36 inches have double front access doors with heavy-duty continuous hinge and center locating 3-point locking handle which closes right side door over left
- Print pocket provided
- Panel cover, front door and top assembly covers have a fixed oil-resistant gasket
- Removable panel mounted on .375-16 collar studs is located behind the console body door
- Optional top assembly has a front-mounted instrument panel cover and rear-mounted access panel cover
- Optional writing desk is available for convenient front mounting

Discount Schedule: C2

Subclass: DR0

Console Body	Console Body Size Height x Width x Depth A x B x C		Panel Size Optional Height x Width		Top Assembly Optional	Writing Desk
Catalog Number	in.	mm	in.	mm	Catalog Number	Catalog Number
AC-1224B	36.00 x 24.00 x 24.00	914 x 610 x 610	26.87 x 16.87	682 x 428	AC-1224T	AC-1224W*
AC-1236B	36.00 x 36.00 x 24.00	914 x 914 x 610	26.87 x 26.87	682 x 682	AC-1236T	AC-1236W*
AC-1248B	36.00 x 48.00 x 24.00	914 x 1219 x 610	26.87 x 38.87	682 x 987	AC-1248T	AC-1248W*

* Not UL or CSA listed

Notes: We can provide special sizes, finishes and other modifications. Consult the factory for your special requirements.

Console
Type 12 - AW-12
Illustration Sheet

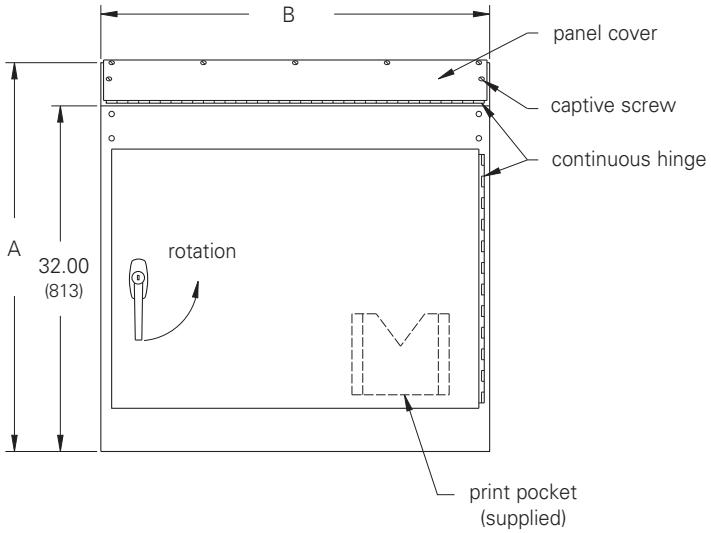

Console Body Front View
(24 inch & 36 inch wide body)

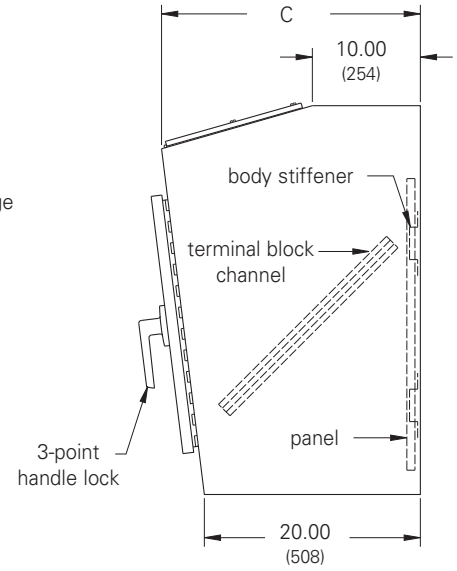

Side View

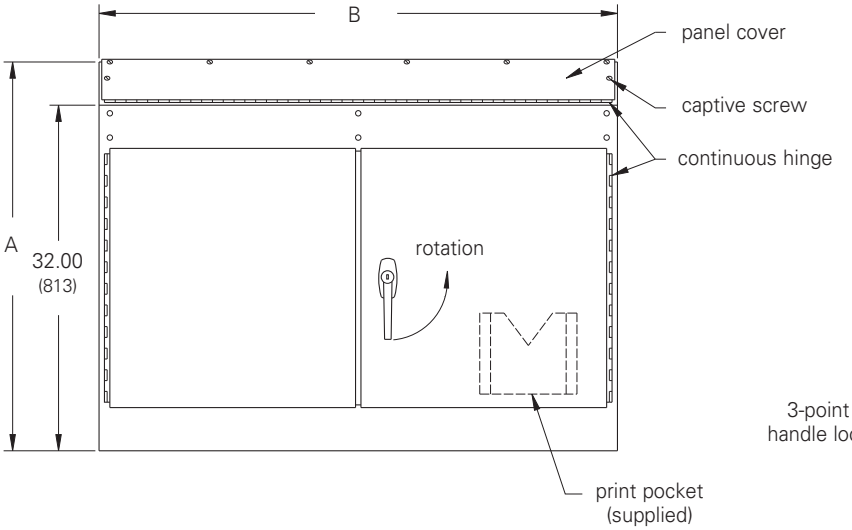

Console Body Front View
(48 inch wide body)

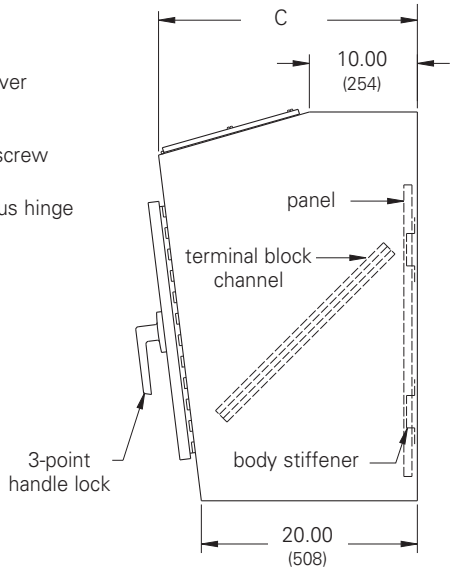

Side View

Notes: Dimensions are in inches. Millimeters shown are for reference only. Data subject to change without notice.

Console
Type 12 - AW-12
Illustration Sheet

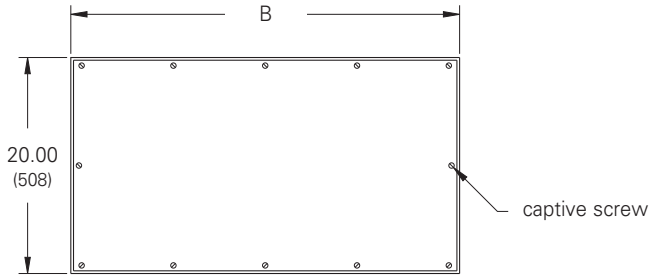

Top Assembly
Front View

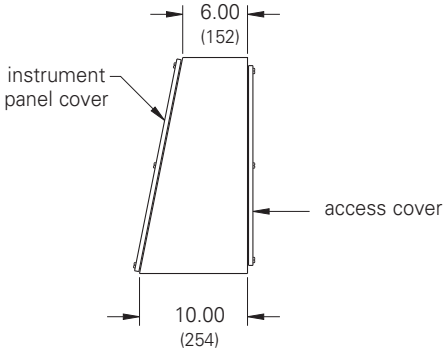

Side View

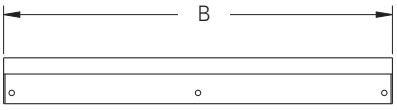

Writing Desk
Front View
(*not UL or CSA listed)

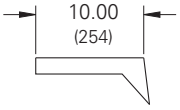

Side View

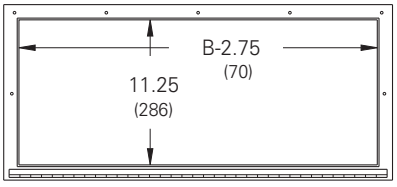

Panel Cover Opening
(panel cover removed)

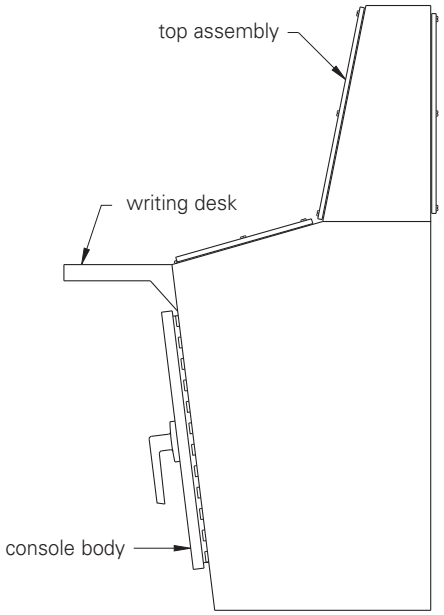

Typical Assembly

Notes: Dimensions are in inches. Millimeters shown are for reference only. Data subject to change without notice.