Product specifications

Eaton SB2111B2BZ

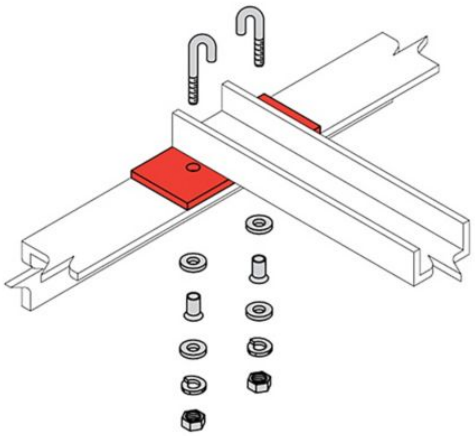

Catalog Number: SB2111B2BZ

Eaton B-Line series runway splice, Used to connect cable runways at side, Includes (2) splices and hardware, Adjusts 270°, Adjustable junction splice kit, ASTM A570 structural steel, Black zinc

General specifications

Product Name	**Catalog Number**
Eaton B-Line series runway splice	SB2111B2BZ
UPC	**Product Length/Depth**
799038335917	5.621 in
Product Height	**Product Width**
2.545 in	2.125 in
Product Weight	**Certifications**
2.4 lb	UL Listed

Powering Business Worldwide

Product specifications

Special features

Includes (2) splices and hardware, Adjusts 270°

Type

Adjustable junction splice kit

Material details

Black zinc ASTM A570 steel

Application

Used to connect cable runways at side

Resources

Brochures

Redi-Rail runway brochure

Catalogs

Cable runway and accessories section of datacomm catalog

Specifications and datasheets

Eaton Specification Sheet - SB2111B2BZ

Eaton Corporation plc
Eaton House
30 Pembroke Road
Dublin 4, Ireland
Eaton.com

© 2023 Eaton. All Rights Reserved.

Eaton is a registered trademark.

All other trademarks are property of their respective owners.

Eaton.com/socialmedia