Champ-Pak CPMV

LED wall pack for hazardous areas



Safe. Reliable. Efficient.

3,000, 5,000 & 7,000 lumen models

EATON
Powering Business Worldwide



Safe. Reliable. Efficient.

Featuring a broad range of LED luminaires for harsh, hazardous and industrial environments, Eaton's Crouse-Hinds delivers lighting solutions that perform reliably in even the worst operating conditions. **This reduces energy, maintenance, and manpower costs.**

Why LED?

Energy efficiency
LED average energy consumption is significantly less than traditional fluorescent and HID fixtures

Start/restart time
Instant illumination vs. 10 minute restrike time for HID

Light quality
Higher color rendering compared to fluorescent and HID

Environmental benefits
Mercury-free LED eliminates disposal costs and lower energy consumption for a smaller carbon footprint

Why Crouse-Hinds?

Industry-best reliability
Built to withstand a wide array of applications

Thermal management
Effective heat sinking ensures longer life

Quality of light
Custom optics designed to maximize light distribution and intensity

Globally certified
Designed to global specifications for IEC and NEC applications

Serviceable drivers
Easy access to drivers for service or replacement

Design features

Built to last:
- Type 4X rated
- Impact-resistant lens sealed from the outside environment provides ingress protection against water and dust
- 60,000+ hours of operation at 55°C
- 5 year fixture warranty†

† Refer to the authorized distributor price book for Crouse-Hinds standard Terms and Conditions.



High efficiency:
- Up to 116 lumens per watt
- Optional photocell

Multiple lens options:
- Clear glass lens standard
- Optional lenses include:
  - Diffused glass
  - Clear polycarbonate
  - Diffused polycarbonate

Simple installation and replacement:
- Contractor-friendly design is ideal for both retrofit and new construction
- Available with lever lock connectors

Additional options:
- Yoke and hub mounts
- Photocell



Rugged design
- Engineered to perform in ambient temperatures from -40°C to +55°C
- Die cast aluminum LED housing provides efficient thermal path to heat sink assembly
- Vertical fin design facilitates air flow and dust shedding



Why choose Champ-Pak LED wall packs?

Reliability. CPMV LED wall packs are engineered to deliver high lumen output and maintenance-free long life in the toughest conditions.

CPMV7L vs. 150 watt HID

70% ENERGY EFFICIENCY

65% TOTAL COST OF OWNERSHIP

100% MAINTENANCE REDUCTION

Assumptions: Calculations based on overall life of the LED system. Energy cost of $.09 per kilowatt; 24 hour per day operation; labor rate of $75 each for 2 workers; average time for fixture maintenance of 1 hour.

Champ-Pak® CPMV LED wall pack



Rugged wall pack solutions.

Eaton's Crouse-Hinds Champ-Pak CPMV LED wall packs are engineered to provide maintenance-free illumination, long life and high performance in Class I, Division 2 areas.

The Champ CPMV LED is available from 3,000 to 7,000 lumens and is designed for extreme conditions and hazardous applications.

Available models:

Model number	Nominal lumens*	Watts	Efficacy	Equivalent MH luminaire
CPMV3L	3,400	30.6	111 Lm/W	70W
CPMV5L	5,200	44.8	116 Lm/W	100W
CPMV7L	6,800	58.9	115 Lm/W	150W-175W

*Nominal lumens based on 5000K CCT with clear glass lens. Wattage measured at 120 VAC.

Primary applications:

- Oil and gas refineries, drilling rigs, petrochemical facilities, food and beverage facilities, platforms, loading docks, tunnels, outdoor wall mounted general area lighting, and where flammable vapors, gases, ignitable dusts, fibers or flyings are present
- Locations requiring continuous and consistent light levels in extreme ambient temperatures
- Where extremely corrosive, wet, dusty, hot and/or cold conditions exist
- NEMA 4X, marine, wet locations and hose-down environments
- Classified and hazardous locations

Certifications & compliances:

- NEC and CEC
  - UL Standards: UL1598, UL1598A, UL 844, UL8750
  - CSA Standard: C22.2 No. 137
- Class I, Division 2, Groups A, B, C, D,
- Class II, Division 1, Groups E, F, G
- Class III & Simultaneous Presence
- Marine and Wet Locations, NEMA 4X and IP66



Temperature codes:

Classified area	40°C	55°C
Class I, Division 2 Groups A, B, C, D	**T5**	**T4A**
Class II, Division 1 Groups E, F, G	**T4A**	**T4A**
Simultaneous presence	**T3**	**T3**

Electrical ratings:

Model number	120V		277V		347V		480V	
	Input power	Input amps	Input power	Input amps	Input power	Input amps	Input power	Input amps
CPMV3L	30.6	0.26	30.6	0.11	29.9	0.09	30.3	0.07
CPMV5L	44.8	0.37	43.9	0.16	43.3	0.13	43.7	0.09
CPMV7L	58.9	0.50	57.8	0.23	56.0	0.16	56.2	0.12

All models	
Voltage range, VAC	120-277V at 50/60 Hz, 347-480V at 60 Hz
Voltage range, VDC	125/250VDC
Power factor	≥0.90
Surge	6kV standard
THD	≤ 20%
Dimming	0-10V

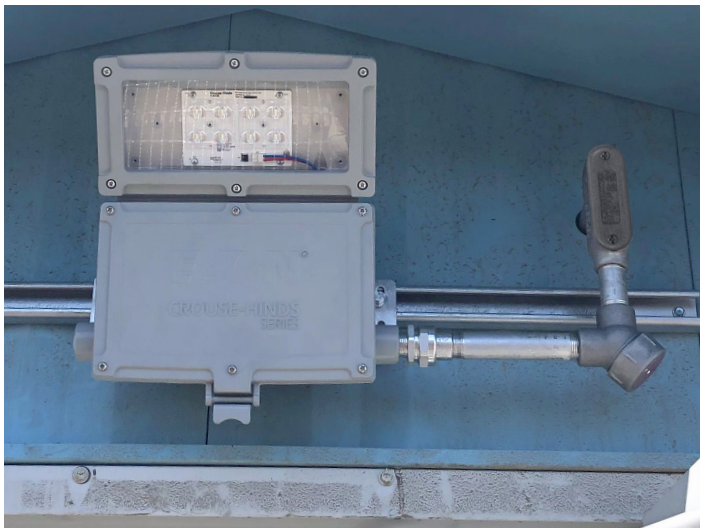

Champ-Pak CPMV wall packs are designed, tested and certified for extreme environments

Ordering information

Part number example

CPMV3LWY-UNV1-S891 PC1

Champ-Pack CPMV LED wall pack, NEC/CEC rated, 3,400 lumens, 3000K warm white, yoke mount, 120-277 VAC, diffused glass window, 120V photocell

CPMV 3L W Y - UNV1 - S891 PC1

Light source/intensity

3L	3,400 nominal lumens
5L	5,200 nominal lumens
7L	6,800 nominal lumens

Color temperature

BLANK	Cool (5000K)
N*	Neutral (4000K)
W	Warm (3000K)

*Consult factory for availability.

Optics

BLANK	Standard

Mounting

BLANK	Wall
H	Hub
Y	Yoke

Voltage

-UNV1	120-277 VAC, 50/60 Hz; 125, 250VDC
-UNV34	347-480 VAC, 50/60 Hz

Lens type

BLANK	Clear glass
S891	Diffused glass
S903	Clear polycarbonate
S903D	Diffused polycarbonate

Photocell*

PC1	120V
PC2	208-277V

*Class I, Division 2 only.

Dimensions: standard wall mount

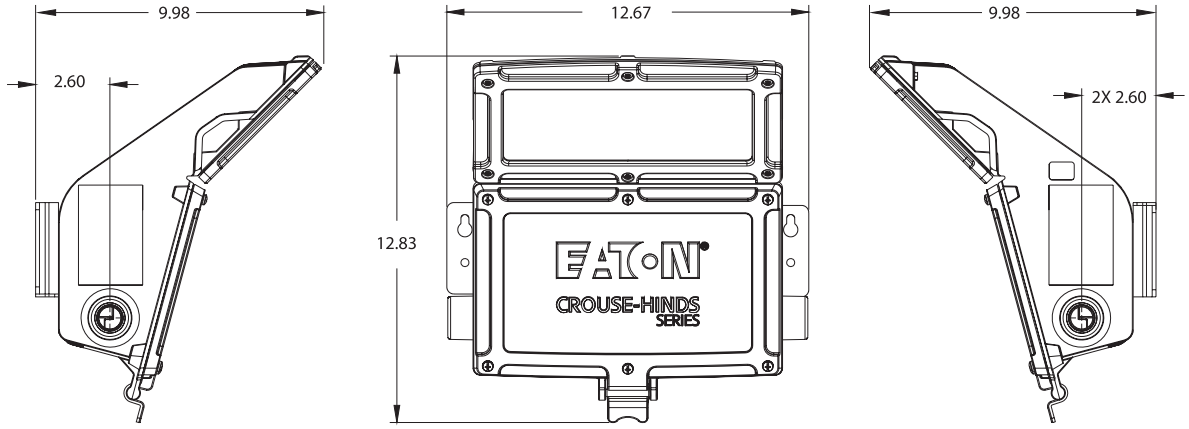

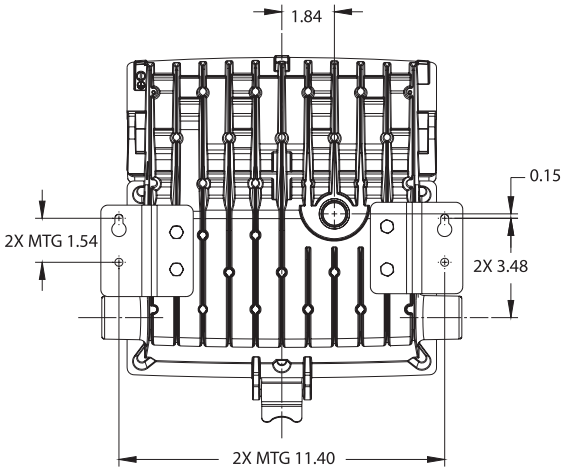

Dimensions: Yoke mount

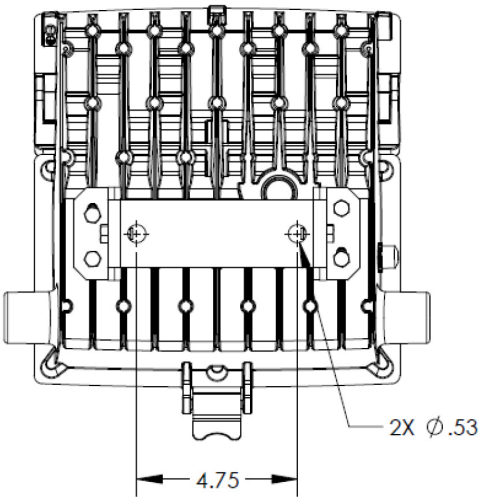

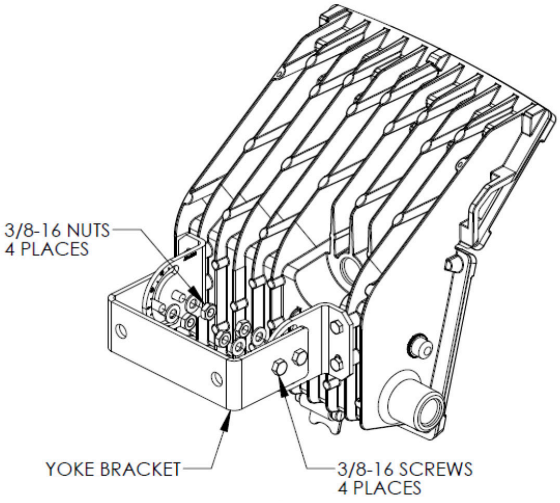

Dimensions: Hub mount

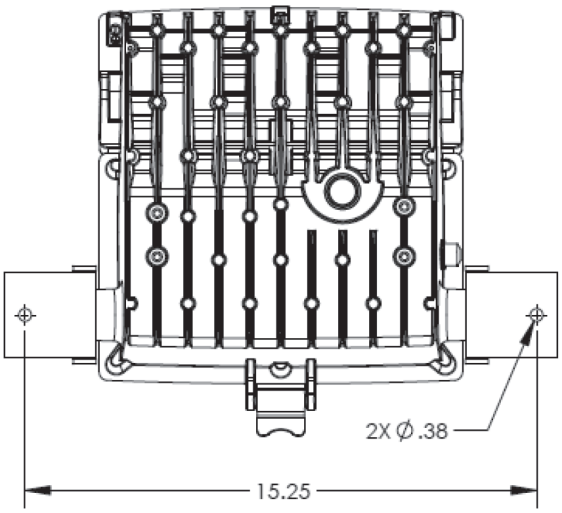

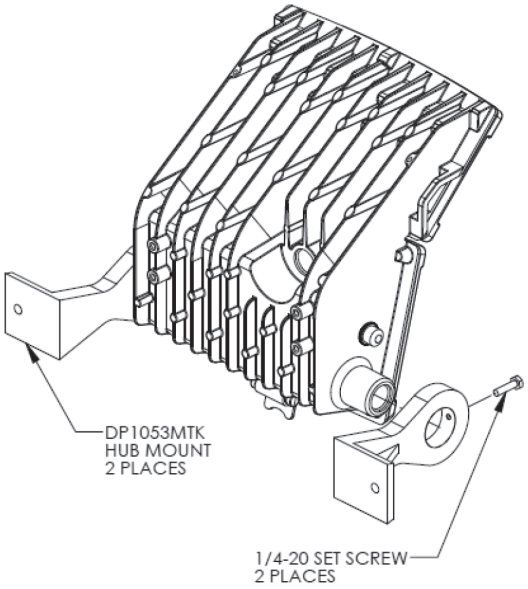

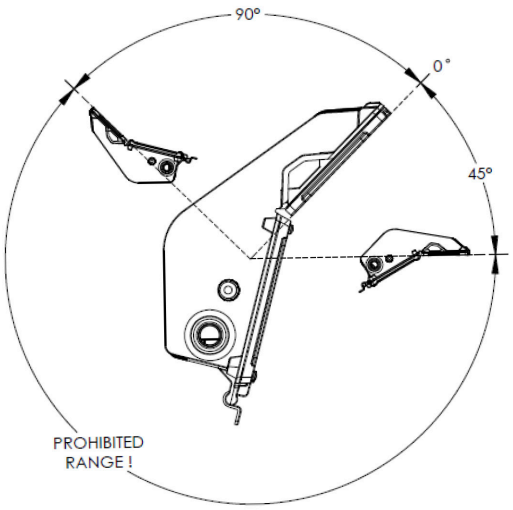

Mounting method	Angle range	Mounting surface
Wall (standard)	Fixed	Wall
Yoke	+45° to -90°	Wall, Ceiling, Horizontal Surface/Ground
Hub (DP1053MTK)	+45° to -90°	Wall, Ceiling, Horizontal Surface/Ground

Note: Class II, Div.1 and Simultaneous Presence Class I, Div. 2 and Class II will be limited to 0° to +45° aiming range only.

Photometrics

CPMV3L-UNV1

Illuminance (Fc)	
Average	0.3
Min.	0.0
Max.	1.6

CPMVM 070

Illuminance (Fc)	
Average	0.3
Min.	0.0
Max.	1.3

CPMVM 070

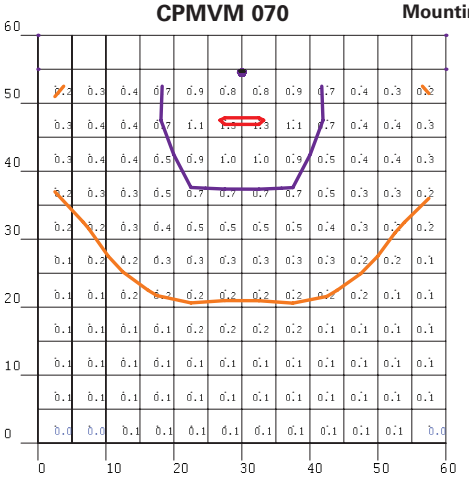

Point by point Foot-Candles
Distance in feet

Mounting height: 15ft

CPMV3L-UNV1

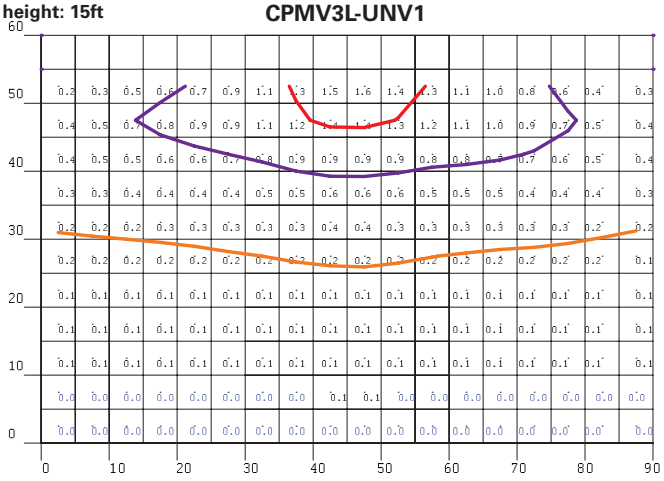

Point by point Foot-Candles
Distance in feet

CPMV5L-UNV1

Illuminance (Fc)	
Average	0.5
Min.	0.0
Max.	2.4

CPMVM 100

Illuminance (Fc)	
Average	0.5
Min.	0.1
Max.	2.3

CPMVM 100

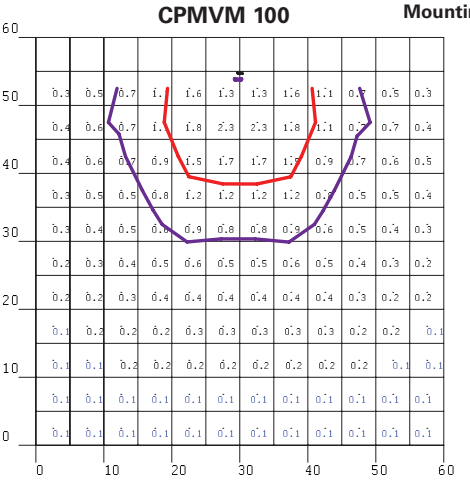

Point by point Foot-Candles
Distance in feet

Mounting height: 15ft

CPMV5L-UNV1

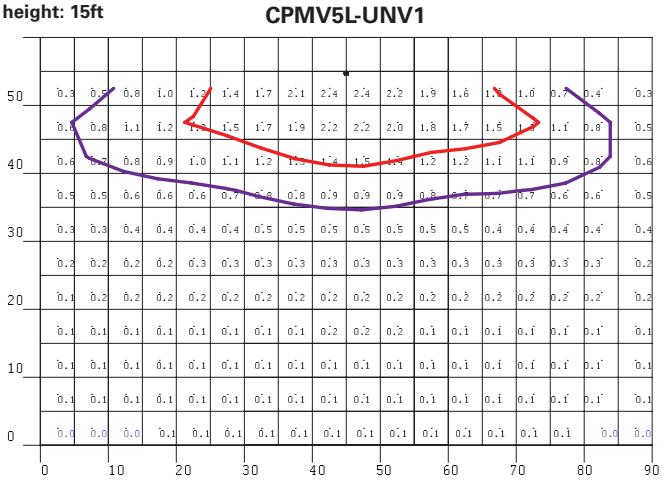

Point by point Foot-Candles
Distance in feet

CPMV7L-UNV1

Illuminance (Fc)	
Average	0.7
Min.	0.1
Max.	3.2

CPMVM 150

Illuminance (Fc)	
Average	0.8
Min.	0.1
Max.	1.5

CPMVM 150

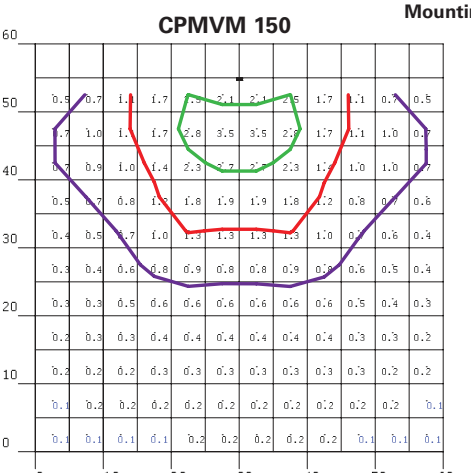

Point by point Foot-Candles
Distance in feet

Mounting height: 15ft

CPMV7L-UNV1

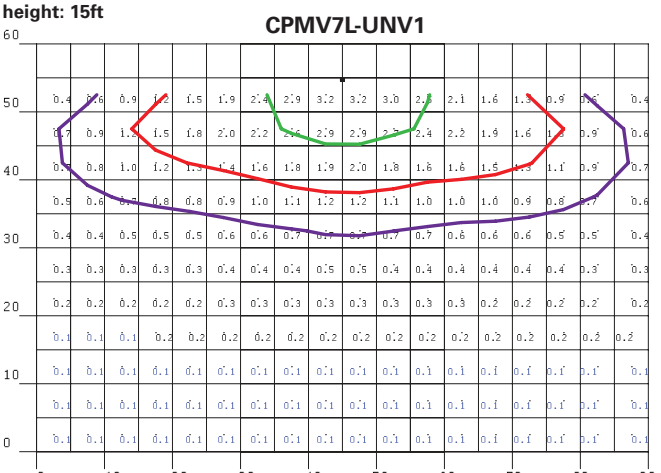

Point by point Foot-Candles
Distance in feet

U.S. (global headquarters): Eaton's Crouse-Hinds business

1201 Wolf Street
Syracuse, NY 13208

(866) 764-5454
FAX: (315) 477-5179
FAX Orders Only:
(866) 653-0640

crousecustomerctr@eaton.com

Eaton's B-Line business

509 West Monroe Street
Highland, IL 62249

800-851-7415
FAX: 618-654-1917
Eaton.com/b-lineseries

IEC Electrical
(CEAG products)

49 (0) 6271 806-500
FAX: 49 (0) 6271 806-476

Info-ex@eaton.com

Airport Lighting

866-764-5454

CrouseCustomerCTR@Eaton.com

Mexico/Latin America/Caribbean

52-555-804-4000
FAX: 52-555-804-4020

ventascentromex@eaton.com

Haz Area Communications
(MEDC, Hernis, Oxalis, FHF Sonix)

44 (0) 1623 444400
FAX: 44 (0) 1623 444531

MEDCadmin@Eaton.com

Canada

Toll Free: 800-265-0502
FAX: (800) 263-9504
FAX Orders only: (866) 653-0645

China

86-21-2899-3600
FAX: 86-21-2899-4055

echsales@eaton.com

Process instrumentation
(MTL products)

44 (0) 1582 723633
FAX: 44 (0) 1582 422283

enquiry@mtl-inst.com

Eaton Middle East

9714-8066100
FAX: 9714-8894813

CHBL-ME@eaton.com

Australia

61-2-8787-2777
FAX: 61-2-9609-2342

crousehindsanz@eaton.com

For more information:

If further assistance is required, please contact an authorized Eaton Distributor, Sales Office, or Customer Service Department.

Powering Business Worldwide

Eaton
1000 Eaton Boulevard
Cleveland, OH 44122
United States
Eaton.com

© 2023 Eaton
All Rights Reserved
Printed in USA
Publication No. 5429-0923
September 2023

Eaton is a registered trademark.

All other trademarks are property of their respective owners.

Follow us on social media to get the latest product and support information.