Rugged wall pack solutions.

Champ-Pak CPMV LED wall packs are engineered to provide maintenance-free illumination, long life and high performance in Class I, Division 2 areas.

The Champ CPMV LED is available from 3,000 to 7,000 lumens and is designed for extreme conditions and hazardous applications.

Model	Nominal lumens[A]	Watts	Lumens per watt	Equivalent MH luminaire
CPMV3L	3,400	30.6	111 Lm/W	70W
CPMV5L	5,200	44.8	116 Lm/W	100W
CPMV7L	6,800	58.9	115 Lm/W	150W-175W

Applications:

- Oil and gas refineries, drilling rigs, petrochemical facilities, food and beverage facilities, platforms, loading docks, tunnels, outdoor wall mounted general area lighting, and where flammable vapors, gases, ignitable dusts, fibers or flyings are present
- Locations requiring continuous and consistent light levels in extreme ambient temperatures
- Extremely corrosive, wet, dusty, hot and/or cold conditions
- NEMA 4X, marine, wet locations and hose down environments
- Classified and hazardous locations

Features:

- Engineered to perform in ambient temperatures from -40°C to +55°C
- Die cast aluminum LED housing provides efficient thermal path to heat sink assembly
- Vertical fin design facilitates air flow and dust shedding
- High efficiency provides up to 116 lumens per watt
- Type 4X rated
- Impact-resistant lens sealed to provide ingress protection against water and dust
- 60,000+ hours of operation at 55°C
- Contractor-friendly design is ideal for both retrofit and new construction
- Available with lever lock connectors
- Clear glass lens standard
- Optional lenses include diffused glass, clear polycarbonate or diffused polycarbonate

Certifications and compliances:

NEC/CEC:

- Class I, Division 2, Groups A, B, C, D
- Class II, Division 1, Groups E, F, G
- Class III & Simultaneous Presence
- Marine and wet locations, NEMA 4X, IP66

UL standards:

- UL844
- UL1598
- UL1598A
- UL8750

CSA standard:

- C22.2 No. 137



Standard materials:

- Fixture housing and door frame assembly – die cast aluminum
- External hardware – stainless steel
- Lens – clear glass (standard); diffused glass, clear polycarbonate, diffused polycarbonate (optional)
- Gasket – silicone

Standard finish:

- Aluminum – Corro-free epoxy powder coat

Photometrics:

- Refer to www.eaton.com (under the Resources tab of each product family) for specific photometric IES files

Electrical ratings:

	120V		277V		347V		480V	
Model	Input power	Input amps	Input power	Input amps	Input power	Input amps	Input power	Input amps
CPMV3L	30.6	0.26	30.6	0.11	29.9	0.09	30.3	0.07
CPMV5L	44.8	0.37	43.9	0.16	43.3	0.13	43.7	0.09
CPMV7L	58.9	0.50	57.8	0.23	56.0	0.16	56.2	0.12

All models	
Voltage range, VAC	120-277V at 50/60 Hz, 347-480V at 60 Hz
Voltage range, VDC	125/250 VDC
Power factor	≥0.90
Surge	6kV standard
THD	≤ 20%
Dimming	0-10V

[A] Nominal lumens based on 5000K CCT with clear glass lens. Wattage measured at 120 VAC.

Copyright© 2023 Eaton

Ordering information:

Part number example
CPMV3LWY-UNV1-S891 PC1

CPMV 3L W _ Y -UNV1 -S891 PC1

Light source / intensity

3L	3,400 nominal lumens
5L	5,200 nominal lumens
7L	6,800 nominal lumens

Color temperature

BLANK	5000K (cool white)
N[B]	4000K (neutral white)
W	3000K (warm white)

Optics

BLANK	Standard

Mounting

BLANK	Wall
H	Hub
Y	Yoke

Voltage

-UNV1	120-277 VAC, 50/60 Hz; 125/250 VDC
-UNV34	347-480 VAC, 60 Hz

Lens material

BLANK	Clear glass lens
S891	Diffused glass lens
S903	Clear polycarbonate
S903D	Diffused polycarbonate

Photocell[C]

PC1	120V
PC2	208-277V

Dimensions – standard wall mount:

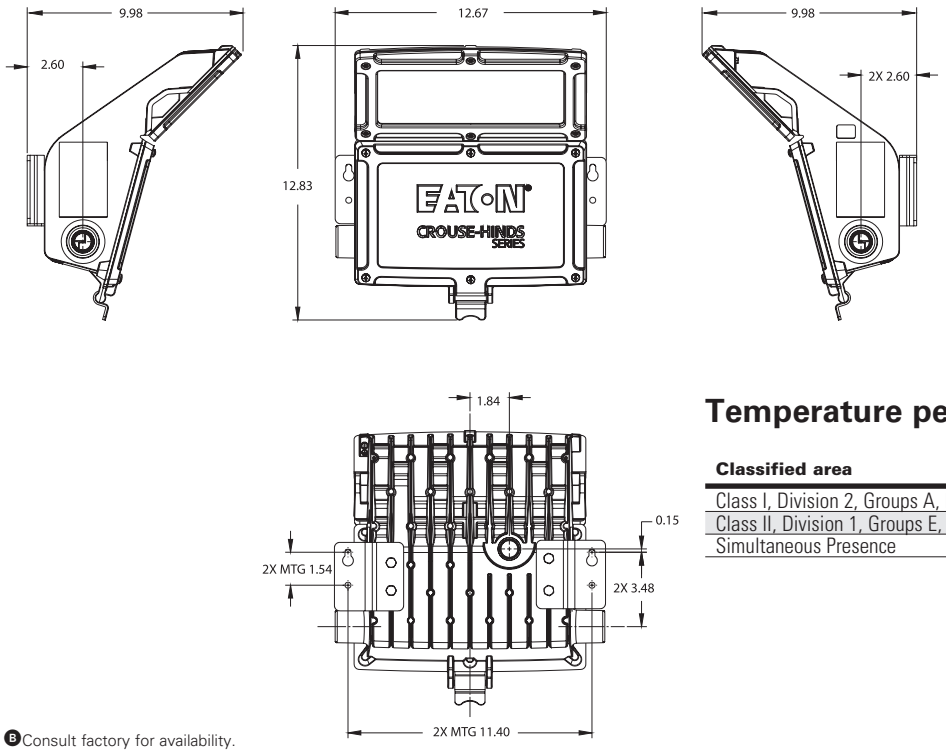

Temperature performance data:

Classified area	40°C	55°C
Class I, Division 2, Groups A, B, C, D	T5	T4A
Class II, Division 1, Groups E, F, G	T4A	T4A
Simultaneous Presence	T3	T3

[B] Consult factory for availability.
[C] Class I, Division 2 only.

Copyright© 2023 Eaton

Dimensions – yoke mount:

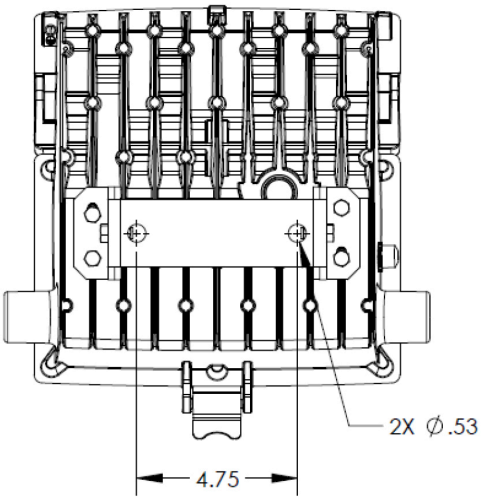

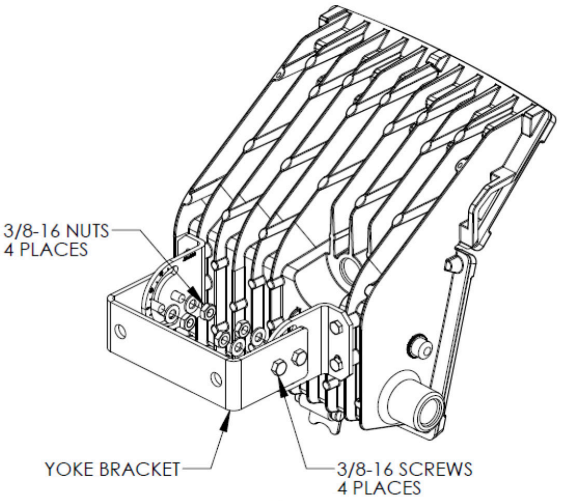

Dimensions – hub mount:

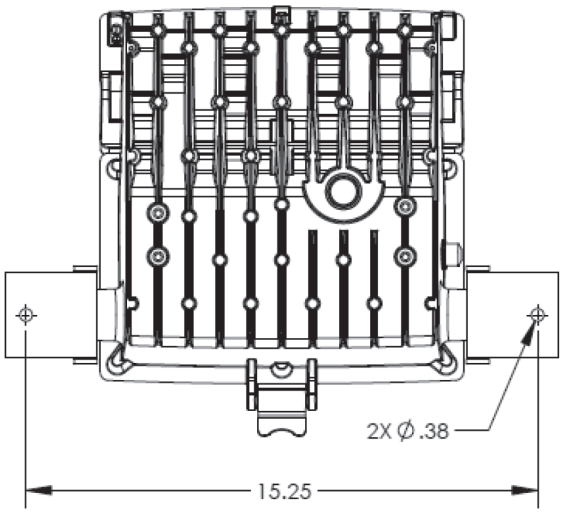

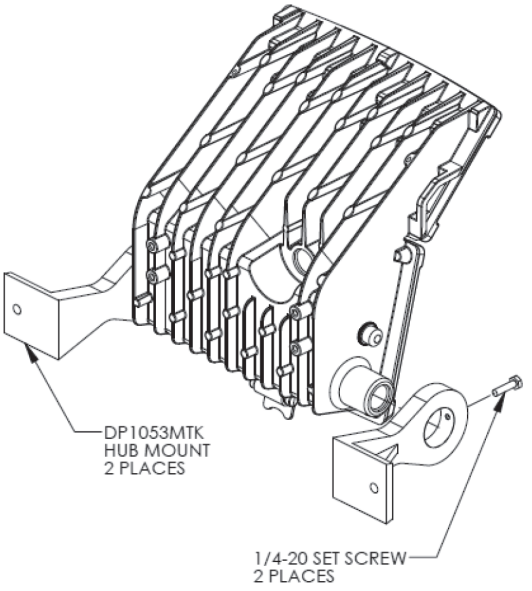

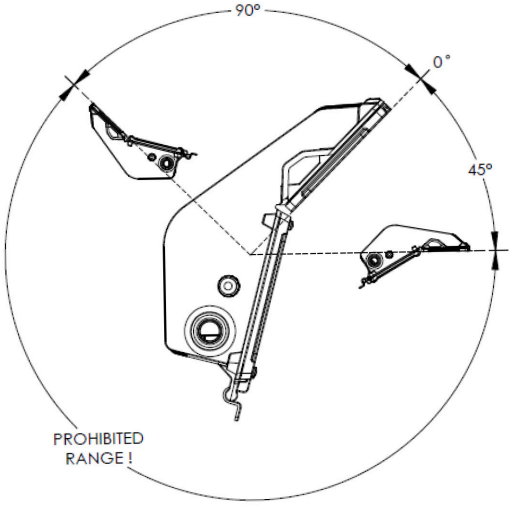

Mounting method	Angle range	Mounting surface
Wall (standard)	Fixed	Wall
Yoke	+45° to -90°	Wall, ceiling, horizontal surface/ground
Hub (DP1053MTK)	+45° to -90°	Wall, ceiling, horizontal surface/ground

Note: Class II, Division 1 and Simultaneous Presence Class I, Division 2 and Class II will be limited to 0° to +45° aiming range only.

www.eaton.com US: 1-866-764-5454 CAN: 1-800-265-0502 Copyright© 2023 Eaton