

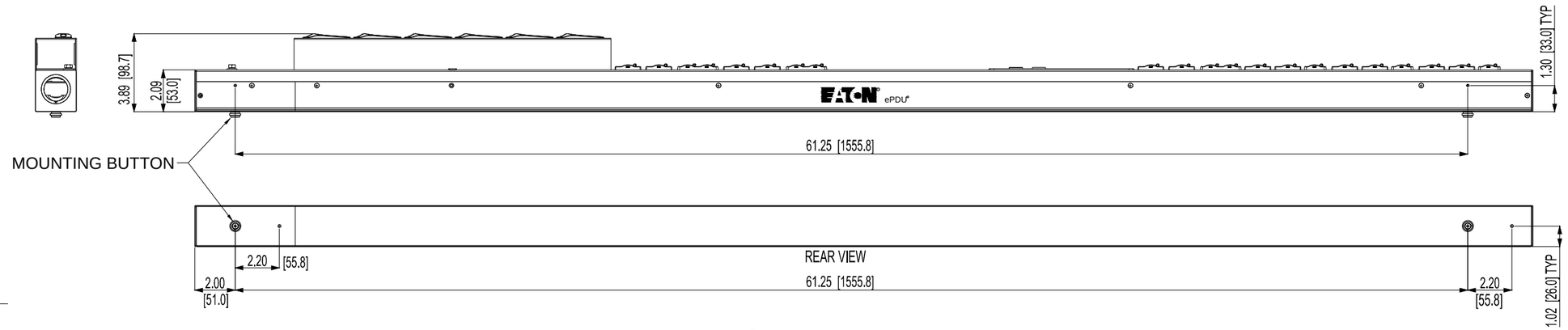

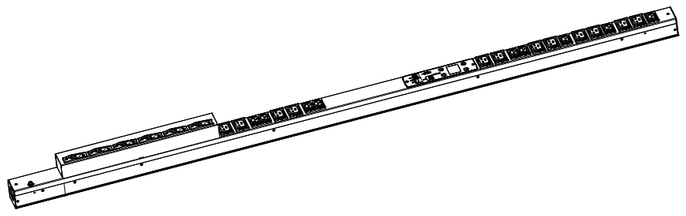

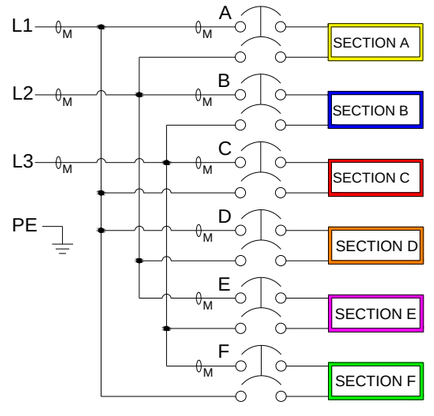

EMI317-10
G3 METERED INPUT

FUNCTIONALITY	INPUT	OUTPUT	OPERATING TEMPERATURE
CURRENT, POWER, AND ENERGY METERING FOR INPUT AND BRANCH	IEC 60309 460P9W 10FT 6AWG / 4C POWERCORD	(9) IEC 60320 C13 GRIP (12) IEC 60320 C19 GRIP	32° TO 140° F 0° TO 60° C
MECHANICAL	**INPUT RATING**	**OUTPUT RATING**	**CERTIFICATIONS**
66.50" (1689mm) LENGTH 2.05" (52mm) WIDTH 2.09" (53mm) DEPTH ALUMINIUM CHASSIS, BLACK	200-240V~ DELTA 3W+PE 48A 50/60HZ	200-240V~ 15A PER C13 16A PER C19 16A MAX PER SECTION 48A MAX PER PHASE	c UL us LISTED
CIRCUIT BREAKERS	**FILTER AND SPIKE/SURGE**	**ACCESSORIES**	**CONFIGURATION**
(6) 20A 2-POLE LISTED	NONE	INCLUDED SPK012 - INSTALLATION INCLUDED SPK013 - NETWORK OPTIONAL EMP001 - ENVIRONMENTAL PROBE	EMI3DL45JJD78A1 SERIAL NUMBER B682____ BASE EMI3TBAAJJD78AC

TITLE	ePDU G3 SPECIFICATION EMI317-10	DRAW	J. OSBORNE 2 MAR 2015
DWG NO.	EMI3DL45JJD78A1	DESIGN	
MATERIAL		CHECKED	
COATING		SAFETY	
UNITS	in[mm]	APPROVED	
SHEET	1/1	A3 SCALE 1:5	EATON ELECTRICAL SECTOR