HomeRunner™ box

Commercial construction screw cover junction box with patented clamps

Applications:

HomeRunner™ junction boxes are designed specifically for commercial construction applications to provide a spacious, flexible junction box for terminating home runs and other electrical wiring. Its patented clamping design and flexibility make it the most convenient, labor savings junction box available.

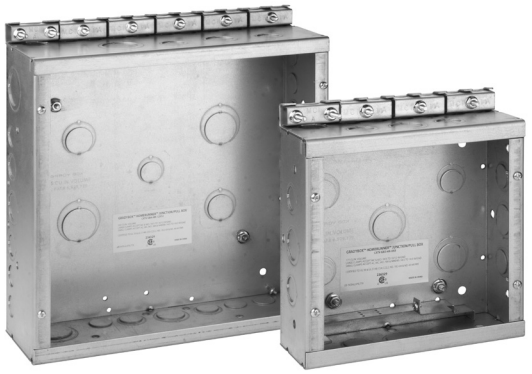

Features:

- Designed and approved for use with AC, MC, MCI-A, NM or EMT
- Patented clamping feature eliminates the need for field punching/ drilling of knockouts and installation of connectors
- Standard surface or flush cover options – eliminates the need for custom covers
- Multiple mounting holes and knockouts for installation flexibility
- Optional stud bracket for direct mounting to steel or wood studs
- Kick stand far side support available with HR080803
- Available in two sizes to match customer requirements and preferences
- Third party certified for U.S. and Canada

Call-out features:

1. Patented clamping system – provides maximum flexibility and maximum grip; third party certified for use with AC, MC, MCI-A or non-metallic sheathed cable
2. Welded steel construction – provides strong, dependable service and large cubic capacity for ease of wiring
3. Combination eccentric knockouts – on sides for quick and easy access, combination KOs in the back of the box are ideal for applications where joist spacing is too tight for side entry
4. Terminal cup washer and flanged nut – quick, easy service ground termination or attachment of grounding bus bar
5. Two cover options – square for surface mounted applications or oversized for flush mount applications
6. Extensive mounting flexibility – pre-drilled holes in side and back for direct mounting or for mounting bracket (purchased separately)
7. Far side support – screws on quickly and easily and is perforated which allows for adjustment in dual thickness, fire rated walls; shipped standard with 8″ x 8″ x 3″ models

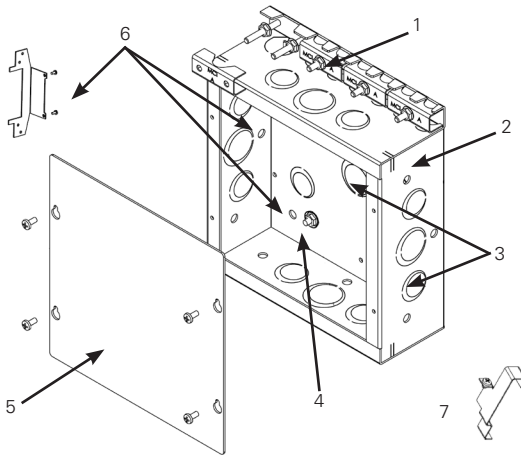

Certifications and compliances:

- For U.S. and Canada: CSA File No. 248782
- Certified to UL50 and UL514B, and CSA C22.2 No. 18.3-04 & No. 40-M1989

Options:

Description	Suffix
• Surface cover included	**SC**

Standard materials:

- Enclosure and cover – pre-galvanized steel
- Hardware – zinc plated steel

Cat. #	Description	Dimensions	Knockouts	Wire fill	Built-in clamps	Cu. vol.	Unit qty.	Wt. lbs. per 100
HR080803	8″ X 8″ box	8" H x 8" W x 3" D	(10) 1/2″ and 3/4″ eccentric, (7) 3/4″ and 1″ eccentric	(86) 14 AWG, (76) 12 AWG, (68) 10 AWG	(1) 10/3 to 10/12, (6) 14/2 to 10/3	177	5	400
HR121204	12″ X 12″ box	12" H x 12" W x 4" D	(9) 1/2″, (8) 1/2″- 3/4″ eccentric, (6) 3/4″- 1″ eccentric, (6) 1″- 1 1/4″ eccentric	(270) 14 AWG, (240) 12 AWG, (216) 10 AWG	(1) 10/3 to 10/12, (10) 14/2 to 10/3	544	5	800
HRC0808S	Surface mount cover	8" H x 8" W x 0.06" D	-	-	-	-	5	100
HRC0808F	Flush mount cover	9.38" H x 9.38" W x 0.06" D	-	-	-	-	5	160
HRC1212S	Surface mount cover	12" H x 12" W x 0.065" D	-	-	-	-	5	270
HRC1212F	Flush mount cover	13.38" H x 13.38" W x .065" D	-	-	-	-	5	230
HRSB1	Stud bracket	-	-	-	-	-	20	35

 Copyright© 2019 Commercial Products Catalog