XC explosionproof electric heaters

Cl. I, Div. 1 & 2, Groups B[A], C, D (NEC)
Cl. I, Zones 1 & 2, Group IIB + H_2[A] (IEC)
NEMA 7B[A]CD

Applications:

Single-phase XC explosionproof electric heaters are used:

- In areas where flammable liquids, gases or vapors are present
- For rugged locations, including:
  - Petroleum refineries, gasoline storage and dispensing areas
  - Wastewater treatment plants
  - Areas that use flammable liquids for cleaning parts in dip tanks
  - Petrochemical plants
  - Paint spraying areas
  - Aircraft hangars and fuel servicing areas
  - Hydrogen fuel cell and battery storage facilities
  - Natural gas plants
- In areas where flammable vapors or gases may be present due to accidental or abnormal conditions
- For standby heat to prevent process heat loss or for personnel comfort during maintenance/repair operations

Features:

- Sloped top cabinet prevents objects that restrict airflow from being set on top
- Corrosion-resistant design with no exposed copper or brass – suitable for H2S environments
- High velocity airflow heats up area faster with better heat distribution
- 14 gauge steel cabinet for rugged reliability
- Short cabinet lengths take up less wall and floor space
- Optional built-in thermostat (Class I, Division 1, Groups C, D, and Zone 1, Group IIB models) reduces field installation costs
- Incoloy® 840 heating elements have longer life expectancy
- Radial embossed aluminum plate fins warp less for better heat transfer
- Galvanized steel mounting brackets for quick installation

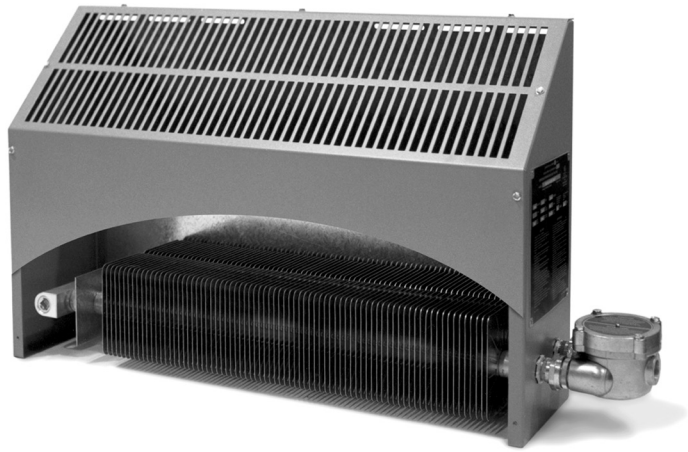

Certifications and compliances:

NEC:

- Class I, Divisions 1 & 2, Groups B[A], C, D

IEC:

- Class I, Zones 1 & 2, Group IIB + H_2[A]

UL standard:

- UL823

CSA standard:

- C22.2 Nos. 25, 30, 46

Environmental ratings:

- NEMA 7B[A]CD
- Temperature code: T2A – 280°C (536°F)

Standard materials and finishes:

- Heating elements – resistance wire embedded in a magnesium oxide refractory and sheathed in an Incoloy 840 tube
- Finned tube assembly – aluminum tube with radial embossed aluminum plate fins
- Cabinet – 14 gauge (0.075"/1.90mm) steel, green/gray epoxy powder coated front and side panels; galvanized steel back panel

Accessories (ordered separately):

Description	Cat. #
• Remotely mounted explosionproof thermostat *Uses Honeywell® control for 45°F to 85°F heating range*	**HRC85**

Specifications:

Nominal kW	1.2	1.8	3.6	4.8	7.6
Shipping weight in lbs. (kg.)	61.3 (27.8)	61.3 (27.8)	61.3 (27.8)	88.4 (40.1)	104.3 (47.3)
Enclosures	NEMA Type 7. For dry indoor use only. Do not immerse in water. Do not store or use in areas exposed to rain or snow.				
Mounting brackets	Two 14 gauge galvanized steel brackets				
Heating elements	Two Incoloy 840 sheathed elements				
Optional built-in thermostat	Explosionproof room thermostat with 10 settings				
Cabinet material	14 gauge (0.075"/1.90mm) steel. Rear panel is galvanized. Front and side panels are baked green/gray epoxy powder coated with five stage pre-treatment, including iron phosphate.				
Temperature code rating	T2A – 280°C (536°F)				
Temperature limitations: Operational Storage	 -45°C to 40°C (-49°F to 104°F) -45°C to 80°C (-49°F to 176°F)				

[A]Hydrogen applications only apply to heaters without built-in thermostats.

 Copyright© 2022 Eaton

Ordering information:

Without built-in room thermostat – Class I, Div. 1 & 2, Groups B, C, D; Zones 1 & 2, Group IIB + H_2

Cat. #	Unit wattage (kW)	Unit output (BTU/hr.)	Unit voltage	Unit amperage	Maximum circuit fuse amperage[C]
XC A1 N0	1.2	4097	120	10.0	15
XC A2 N0	1.2	4097	208	5.8	15
XC A3 N0	1.2	4097	240	5.0	15
XC A4 N0	1.2	4097	480	2.5	15
XC A5 N0	1.2	4097	600	2.0	15
XC A6 N0	1.2	4097	277	4.3	15
XC B1 N0	1.8	6146	120	15.0	20
XC B2 N0	1.8	6146	208	8.7	15
XC B3 N0	1.8	6146	240	7.5	15
XC B4 N0	1.8	6146	480	3.8	15
XC B5 N0	1.8	6146	600	3.0	15
XC B6 N0	1.8	6146	277	6.5	15
XC C2 N0	3.6	12292	208	17.3	20
XC C3 N0	3.6	12292	240	15.0	20
XC C4 N0	3.6	12292	480	7.5	15
XC C5 N0	3.6	12292	600	6.0	15
XC C6 N0	3.6	12292	277	13.0	15
XC D2 N0	4.8	16389	208	23.1	25
XC D3 N0	4.8	16389	240	20.0	25
XC D4 N0	4.8	16389	480	10.0	15
XC D5 N0	4.8	16389	600	8.0	15
XC D6 N0	4.8	16389	277	17.3	20
XC E2 N0	7.6	25950	208	36.5	40
XC E3 N0	7.6	25950	240	31.7	35
XC E4 N0	7.6	25950	480	15.8	20
XC E5 N0	7.6	25950	600	12.7	15
XC E6 N0	7.6	25950	277	27.4	30

Note: Remote mounted explosionproof room thermostats are not suitable for Group B + IIC applications. Remote contactors are also required on all 600V heaters and heaters with a current draw greater than 22A (supplied and installed by others).

Remote mounted explosionproof room thermostats suitable for Group B, IIB + H_2 applications are a special order item.

Operation at lower than rated voltages will result in reduced kW output and amperage draw. Actual output (kW) = [(supply voltage)^2 ÷ (rated voltage)^2] x rated unit wattage (kW).

With built-in room thermostat – Class I, Div. 1 & 2, Groups C, D; Zones 1 & 2, Group IIB

Cat. #	Unit wattage (kW)	Unit output (BTU/hr.)	Unit voltage	Unit amperage	Maximum circuit fuse amperage[C]
XC A1 B1	1.2	4097	120	10.0	15
XC A2 B2	1.2	4097	208	5.8	15
XC A3 B3	1.2	4097	240	5.0	15
XC A4 B4	1.2	4097	480	2.5	15
XC A6 B6	1.2	4097	277	4.3	15
XC B1 B1	1.8	6146	120	15.0	20
XC B2 B2	1.8	6146	208	8.7	15
XC B3 B3	1.8	6146	240	7.5	15
XC B4 B4	1.8	6146	480	3.8	15
XC B6 B6	1.8	6146	277	6.5	15
XC C2 B2	3.6	12292	208	17.3	20
XC C3 B3	3.6	12292	240	15.0	20
XC C4 B4	3.6	12292	480	7.5	15
XC C6 B6	3.6	12292	277	13.0	15
XC D3 B3	4.8	16389	240	20.0	25
XC D4 B4	4.8	16389	480	10.0	15
XC D6 B6	4.8	16389	277	17.3	20
XC E4 B4	7.6	25950	480	15.8	20

Dimensions (in inches):

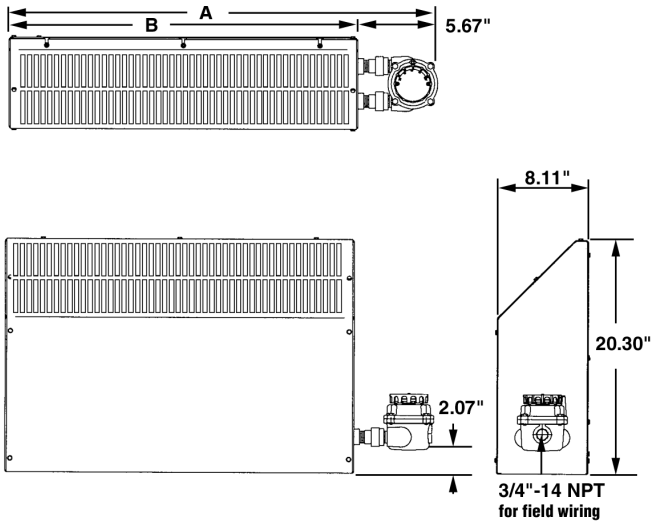

Heater kW rating	A	B
1.2 - 3.6	37.0" (940mm)	31.34" (796mm)
4.8	55.125" (1400mm)	49.45" (1256mm)
7.6	65.125" (1654mm)	59.49" (1511mm)

[B]Hydrogen applications only apply to heaters without built-in thermostats.

[C]Or equivalent breaker as per National Electrical Code and Canadian Electrical Code.

Copyright© 2022 Eaton