Applications:

EPC magnetic line starters and enclosures are used:

- For across-the-line starting of polyphase AC induction motors
- In locations made hazardous due to the presence of flammable vapors, gases or highly combustible dusts
- In damp, wet or corrosive locations
- Indoors or outdoors at petroleum refineries, chemical and petrochemical plants and other process industry facilities where similar hazards exist
- To provide motor running protection, undervoltage protection and remote starting and stopping

Features:

- Quick-opening covers – less than two turns to remove or install
- Three-section design for ease of installation
- Water shedding construction with female threads on top cover, male threads on bottom cover and top cover skirted
- Specially located stops and locks ensure adequate thread engagement and prevent overtightening
- Separate replaceable mounting bracket attached to the rear of the body provides three-point suspension for quick installation and leveling – one keyhole slot at top and two open slots at bottom
- Bodies have two taper tapped conduit hubs with integral bushings on the top, and two more directly below
- Universal mounting plate and reset mechanism will accommodate any of the motor starters in catalog listing
- When interior mounting plate is removed, line and load conductors are easily pulled into the wiring chamber; the interior assembly with starter attached is then replaced, final connections made and covers assembled
- Furnished with third overload relay as standard



Certifications and compliances:

NEC/CEC:

- Class I, Divisions 1 & 2, Groups C, D
- Class II, Division 1, Groups E, F, G
- Class II, Division 2, Groups F, G
- Class III

UL standard:

- UL1203

CSA standard:

- C22.2 No. 30

Environmental ratings:

- NEMA/EEMAC 3, 4, 7CD, 9EFG, 12

Standard materials:

- Bodies and covers – copper-free aluminum
- Reset handle – copper-free aluminum
- Reset shaft – stainless steel
- Interior parts – stainless steel

Standard finishes:

- Copper-free aluminum – natural
- Stainless steel – natural
- Sheet steel – electrogalvanized with chromate finish

Electrical ratings:

- Starter sizes 0 to 1 inclusive

Options:

The following special options are available from factory by adding suffix to catalog number. Many options are available in kit form or for field addition to existing units.

Description **Suffix**

- Control circuit transformer, fusible – secondary ..... **FT**
  600/480/240-120V, 50 or 60 Hz (sizes 0 and 1 – 50VA, 100VA)
- Control circuit transformer, fusible – primary and secondary ..... **FTPS**
  600/480/240-120V, 50 or 60 Hz (sizes 0 and 1 – 50VA, 100VA)
- Side bosses drilled and tapped same size as standard hubs **S366**
- Back boss drilled and tapped same size as standard hubs **S367**
- START-STOP pushbutton (heavy duty) ..... **PB3Ⓐ**
- ON-OFF selector switch (standard duty) ..... **RR2Ⓐ**
- HAND-OFF-AUTO selector switch (standard duty) ..... **RR3Ⓐ**
- Pilot light, red, 120V **J1**
- Pilot light, green, 120V **J3**
- Pilot light transformer, 240VⒷ **T2**
- Pilot light transformer, 480VⒷ **T4**
- Pilot light transformer, 600VⒷ **T5**
- Space heater, 120V **R11**
- Space heater, 240V **R22**
- Space heater, 480V **R44**
- Automatic reset overload relay **S1**
- Less overload relays (lighting contactor) ..... **CL**
- Less overload relays (motor contactor) ..... **CM**
- Standard breather (Class I, Groups C, D; Class II, Groups E, F, G; Class III) **S219**
- Standard drain (Class I, Groups C, D; Class II, Groups E, F, G; Class III) **S198**
- Standard breather and drain (Class I, Groups C, D; Class II, Groups E, F, G; Class III) **S198V**
- Universal breather/drain (Class I, Groups C, D; Class II, Groups F, G) **S454Ⓐ**
- Two universal breather/drains (Class I, Groups C, D; Class II, Groups F, G) ..... **S454VⒶ**

Auxiliary contactsⒸ:

- 1 N.O./1 N.C. **S781**
- 2 N.O./2 N.C. **S782**
- 3 N.O./3 N.C. **S783**

Pilot light holes drilled, tapped and plugged for future addition of pilot lights:

- One hole **S541**
- Two holes **S542**

ⒶNot suitable for NEMA 4.

ⒷRequired for pilot lights on other than 120V control circuits. One required for each lamp.

ⒸApplication is limited by starter or contactor design – contact factory.

Copyright© 2022 Eaton

Ordering information:

To order an enclosure complete with starter, insert the manufacturer's symbol in the designated position of the catalog number. Symbols are shown in the footnote below.

Select the complete catalog number below and specify horsepower, voltage, frequency, RPM, type and full load ampere rating of motor – or specify ampere rating of heaters.

Enclosures only can be ordered. Select from listings below.

Motor starter			Enclosure			
Max. HP polyphase	**Voltage**	**NEMA size**	**Hub size**	**Internal diameter**	**Cat. # Without starter**	**Cat. # With starter[D]**
2	120	0	1¼"	7"	**EPC97**	**EPC970 ⓘ613**
3	120	1	1¼"	7"	**EPC97**	**EPC971 ⓘ613**
3	240	0	1¼"	7"	**EPC97**	**EPC970 ⓘ623**
5	480	0	1¼"	7"	**EPC97**	**EPC970 ⓘ643**
5	600	0	1¼"	7"	**EPC97**	**EPC970 ⓘ653**
7.5	240	1	1¼"	7"	**EPC97**	**EPC971 ⓘ623**
10	480	1	1¼"	7"	**EPC97**	**EPC971 ⓘ643**
10	600	1	1¼"	7"	**EPC97**	**EPC971 ⓘ653**

ⓘMotor starters

Manufacturer	Symbol
Allen-Bradley	AB
General Electric	G
Square D	D
Cutler-Hammer	W

[D]Starters are furnished with three heaters, when heater ratings are fully specified.

www.eaton.com US: 1-866-764-5454 CAN: 1-800-265-0502 Copyright© 2022 Eaton

Dimensions[E] (in inches):

7″ Internal diameter

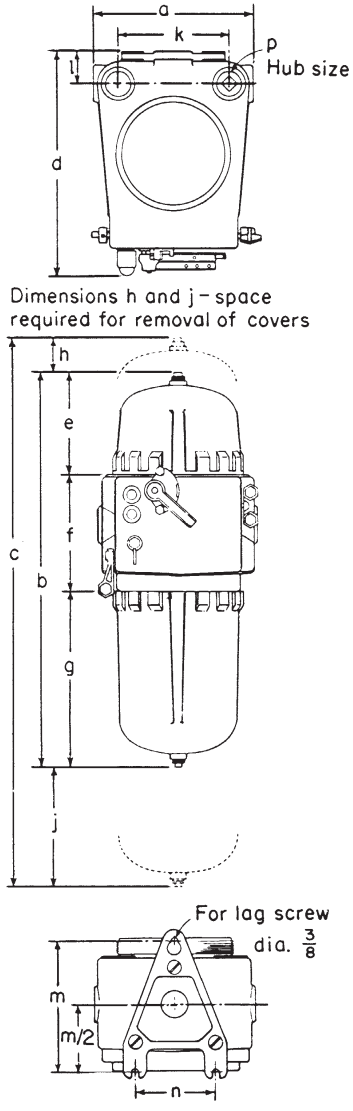

Single-speed, non-reversing sizes 0, 1 starters

	EPC97	EPC97-FTPS or EPC97-FT[F]
Internal diameter	**7"**	**7"**
a	$10\frac{5}{8}$	$10\frac{5}{8}$
b	$19\frac{13}{16}$	$24\frac{13}{16}$
c	$25\frac{13}{16}$	$37\frac{13}{16}$
d	$14\frac{11}{16}$	$14\frac{11}{16}$
e	$6\frac{3}{4}$	$11\frac{3}{4}$
f	$7\frac{11}{16}$	$7\frac{11}{16}$
g	$5\frac{3}{8}$	$5\frac{3}{8}$
h	2	9
j	4	4
k	$7\frac{3}{8}$	$7\frac{3}{8}$
l	$2\frac{1}{16}$	$2\frac{1}{16}$
m	$9\frac{3}{8}$	$9\frac{3}{8}$
n	$5\frac{1}{4}$	$5\frac{1}{4}$
p	$1\frac{1}{4}$	$1\frac{1}{4}$

[E] Dimensions are approximate, not for construction purposes.
[F] For units with control circuit transformer (FT or FTPS suffix).

Copyright© 2022 Eaton

EPC magnetic line starters and enclosures

Special feature kits

Pushbutton station and selector switch kits:

(Applies to 7" and 11" EPC)

EPC magnetic line starter and EPC combination line starter enclosures are provided as standard with switch operating shaft holes drilled, tapped and plugged. Pushbutton stations and selector switches can be assembled in these enclosures in the field, using kits listed below.

Description	Cat. #
START-STOP pushbutton station assembly	**EPC PB3 KIT**
Replacement pushbutton station only for EPC-PB3-KIT	**16320 N**
ON-OFF selector switch assembly (2-position)	**EPC RR2 KIT**
Replacement switch only for EPC-RR2-KIT	**ESWP126**
HAND-OFF-AUTO selector switch assembly (3-position)	**EPC RR3 KIT**
Replacement switch only for EPC-RR3-KIT	**ESWP126**

Pilot light kits:

When EPC magnetic line starter and EPC combination line starter enclosures have been ordered with pilot light holes drilled, tapped and plugged (S541 and S542 suffix), pilot lights can be assembled in the field, using kits listed below.

Description	Applies to	Cat. #
Pilot light assembly less transformer	7", 11" EPC	**EMP015 ① KIT**
Pilot light assemblies with transformer and transformer mounting strap (for single pilot light) S541 suffix	7" EPC only	**EPC87 ① ② KIT**
	11" EPC only	**EPC813 ① ② KIT**
Two pilot light assemblies with two transformers and transformer mounting strap (for double pilot light) S542 suffix	7" EPC only	**EPC87 ① ① ② KIT**
	11" EPC only	**EPC813 ① ① ② KIT**
Replacement pilot light transformer only (240V primary)	All units	**15129 A**
Replacement pilot light transformer only (480V primary)	All units	**15130 A**
Replacement pilot light transformer only (600V primary)	All units	**15131 A**

①Insert color symbol from table below

②Add primary voltage symbol

Example: EPC87-①-①-②-KIT with red and green pilot lights for 480V is EPC-J1-J3-T4-KIT.

Color	Symbol	Color	Symbol
Red	J1	Clear	J10
Green	J3	Blue	J11
Amber	J6		

Voltage	Symbol
240	T2
480	T4
600	T5

 Copyright® 2022 Eaton