Pauluhn Summit linear fluorescent luminaires

High bay luminaires for food and beverage and industrial locations

Applications:

- Locations requiring continuous and consistent light levels
- Food and beverage processing and storage
- Power generation facilities
- Water/wastewater treatment facilities
- Pharmaceutical facilities

Features:

- High lumen output: up to 30,000 lumens
- Complete portfolio of T5, T8 and T5HO fluorescent models
- Versatile mounting options
- NSF rated
- Operating ambient: -25°C to +55°C
- Optimized debris shedding design
- USDA compliant
- High pressure hose down rated

Certifications and compliances:

- Type 4 (EAB only); Type 4X (ESB only)
- IP66
- UL924 – Emergency Lighting Equipment (CSA-US)
- UL1598 – Luminaires (CSA-US)
- CSA 22.2 No. 250-4
- CSA C22.2 141
- Canadian Processed Products Regulations C.R.C., c.291
- NSF/ANSI 2-2010 Splash Zone

Standard materials:

- Housing – Type 5052 aluminum (EAB only); Type 304 stainless steel; Type 316 stainless steel (optional) (ESB only)
- Lens – acrylic (standard); polycarbonate and tempered glass (optional)



ESB



EAB

Photometrics:

- Refer to www.eaton.com (under the Resources tab of each product family) for specific photometric IES files

Ordering information:

Part number example

EAB46570EM2

EAB **4** **6** **5** **7** **0** **EM2**

Model

EAB	Bolted door (aluminum)
ESB	Bolted door (stainless steel)
EA	Quick release (aluminum)
ES	Quick release (stainless steel)

Length (nominal)

2	2 foot
4	4 foot

Number of lamps

2	2 lamps
3	3 lamps
4	4 lamps
6	6 lamps (lamp type 5, 5°F/35°C max. ambient) (ESB only)

Lamp types

1	2 ft. F17 or 4 ft. F32 (T8 bi-pin)
5	2 ft. F24 or 4 ft. F54 (T5HO mini bi-pin)
6	2 ft. F14 or 4 ft. F28 (T5 mini bi-pin)
7	4 ft. F48 (T8HO RDC)

Voltage / frequency

6	347V, 60 Hz
7	120-277V, 50/60 Hz
9	480V, 60 Hz

Mounting style

0	Pendant; two ½" NPT hubs
1	Through feed; two ½" NPT hubs
2	Pendant/through feed; four ½" NPT hubs
3	Pendant; two ¾" NPT hubs
4	Through feed; two ¾" NPT hubs
5	Pendant/through feed; four ¾" NPT hubs

Options

EM2[A]	Emergency battery back-up ballast, one lamp, 277V max.
EM3[A]	Emergency battery back-up ballast, high lumen, one lamp, 277V max.
L	Lamps
HR	High reflectance reflector
G	Tempered glass lens
P	Polycarbonate lens
Z	316 stainless steel (ESB only)
W3	3 ft. 16/3 cord; change suffix '3' for longer cord (WP163SR-3)
Q	Quick disconnect receptacle (WP003MR) (order connecting cords separately)

[A] For T5 and T5HO, EM ballast is fixed voltage, 120 or 277V, 50/60 Hz.

Copyright© 2023 Eaton

Pauluhn Summit linear fluorescent luminaires

High bay luminaires for food and beverage and industrial locations

Mounting options:

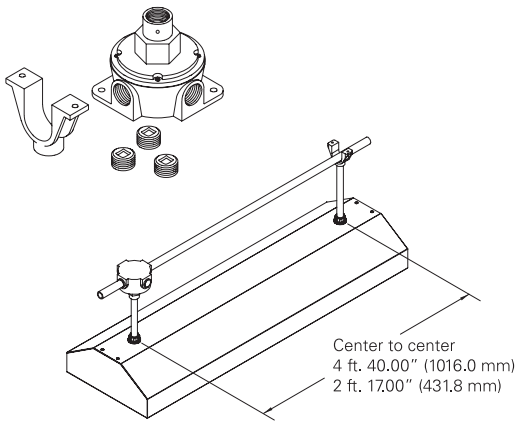

HP1095MTK

Pendant kit
(1) saddle clamp and (1) universal junction box and cover (¾" NPT hubs)

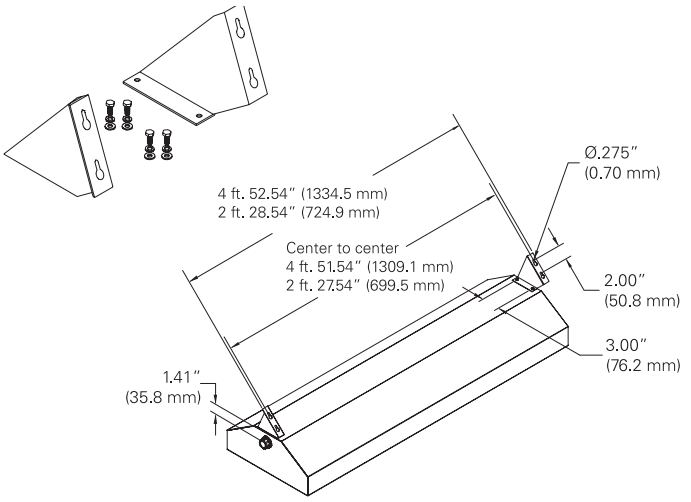

HP1099MTK

Fixed wall mount kit
(2) angled stainless steel wall brackets and hardware

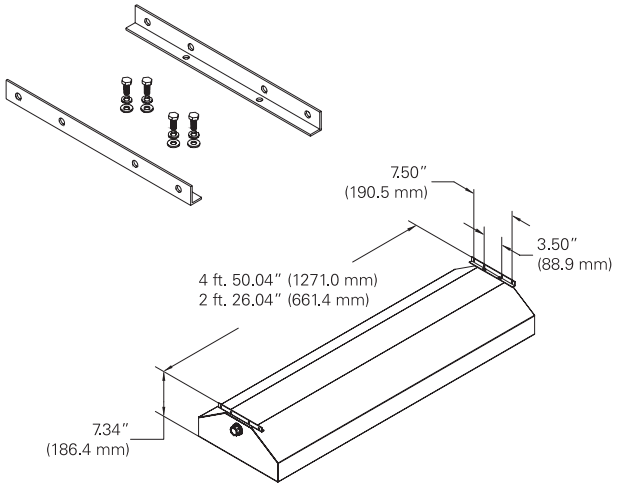

HP1093MTK

Chain/cable mount kit
(2) stainless steel chain brackets and hardware

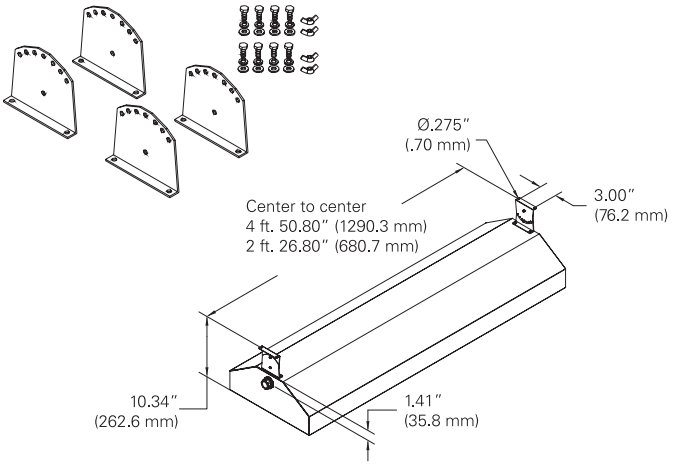

HP1097MTK

Adjustable mount kit
(2) pairs of stainless steel brackets and hardware

www.eaton.com US: 1-866-764-5454 CAN: 1-800-265-0502 Copyright© 2023 Eaton

Pauluhn Summit linear fluorescent luminaires

High bay luminaires for food and beverage and industrial locations

Dimensions:

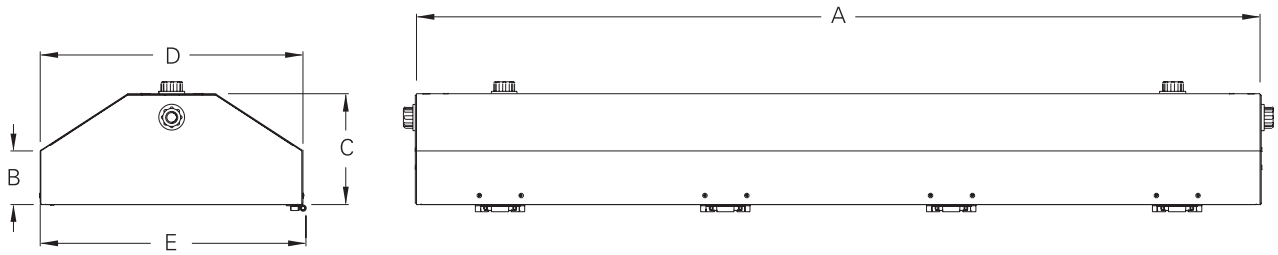

	Dimensions in inches / centimeters						Nominal weight[B]	
Nominal length	A	B	C	D	E	Carton L x W x D (in.)	EAB series lbs. (kg.)	ESB series lbs. (kg.)
2 foot	26.59 (67.50)	3.20 (8.10)	6.59 (16.70)	15.72 (39.90)	15.92 (40.40)	28 3/4 x 16 3/8 x 7 1/8	21.00 (9.50)	30.00 (13.61)
4 foot	50.59 (128.50)	3.20 (8.10)	6.59 (16.70)	15.72 (39.90)	15.92 (40.40)	53 x 16 3/8 x 7 1/8	34.00 (15.40)	54.00 (24.50)

[B] Add 1.00 lb. for 3 or 4 lamps. Add 2.00 lbs. for 5 or 6 lamps.

Copyright© 2023 Eaton