Pauluhn Apex linear fluorescent luminaires

High bay luminaires for hazardous industrial locations

Cl. I, Div. 2, Groups A, B, C, D
Cl. II, Div. 1, Groups F, G
Cl. III
Type 4, 4X; IP66

Applications:

- Locations requiring continuous and consistent light levels
- Food and beverage processing and storage
- Power generation facilities
- Water/wastewater treatment facilities
- Pharmaceutical facilities

Features:

- High lumen output: up to 30,000 lumens
- Complete portfolio of T5, T8 and T5HO fluorescent models
- Versatile mounting options
- NSF rated
- Operating ambient: -25°C to +55°C
- Optimized debris shedding design
- USDA compliant
- High pressure hose down rated

Certifications and compliances:

- Class I, Division 2, Groups A, B, C, D
- Class II, Division 1, Groups F, G
- Class III
- Type 4 (HBAB only); Type 4X (HBSB only)
- IP66
- UL844 – Hazardous Locations (CSA-US)
- UL924 – Emergency Lighting Equipment (CSA-US)
- UL1598 – Luminaires (CSA-US)
- CSA – Class 3428 03
- CSA – Class 3428 83
- NSF/ANSI 2-2010 Splash Zone

Standard materials:

- Housing – Type 5052 aluminum (HBAB only); Type 304 stainless steel (HBSB only)
- Lens – clear acrylic (standard); polycarbonate or glass (optional)



HBAB



HBSB

Photometrics:

- Refer to www.eaton.com (under the Resources tab of each product family) for specific photometric IES files

Ordering information:

Part number example
HBAB46574EM1

HBAB 4 6 5 7 4 EM1

Model

HBAB	Bolted door (aluminum)
HBSB	Bolted door (stainless steel)
HBA	Quick release (aluminum)
HBS	Quick release (stainless steel)

Length (nominal)

2	2 foot
4	4 foot

Number of lamps

2	2 lamps
3	3 lamps
4	4 lamps
6	6 lamps (lamp types 1 and 6 only)[A]

Lamp types

1	2 ft. F17 or 4 ft. F32 (T8 bi-pin)
5	2 ft. F24 or 4 ft. F54 (T5HO mini bi-pin)
6	2 ft. F14 or 4 ft. F28 (T5 mini bi-pin)
7	4 ft. F48 (T8HO RDC)

Voltage / frequency

6	347V, 60 Hz
7	120-277V, 50/60 Hz
9	480V, 60 Hz

Entry size

1	Feed through (2) ½" NPT hubs
4	Feed through (2) ¾" NPT hubs

Options

EM1	Emergency battery back-up ballast, one lamp, 277V max.
EMT1	Emergency battery back-up ballast with test switch, one lamp, 277V max.
L	Lamps
HR	High reflectance reflector
G	Tempered glass lens
P	Polycarbonate lens
Z	316 stainless steel (HBSB only)

[A] For HBSB and HBS only.

Copyright© 2023 Eaton

Pauluhn Apex linear fluorescent luminaires

High bay luminaires for hazardous industrial locations

Cl. I, Div. 2, Groups A, B, C, D
Cl. II, Div. 1, Groups F, G
Cl. III
Type 4, 4X; IP66

Mounting options:

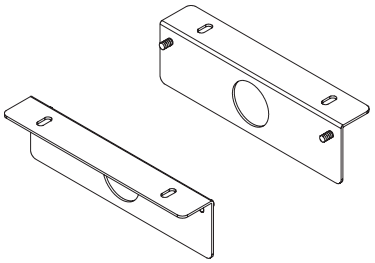

FX7091

Ceiling mount brackets
Attach to the suspension ears of the fixture, with the nuts and washers provided.

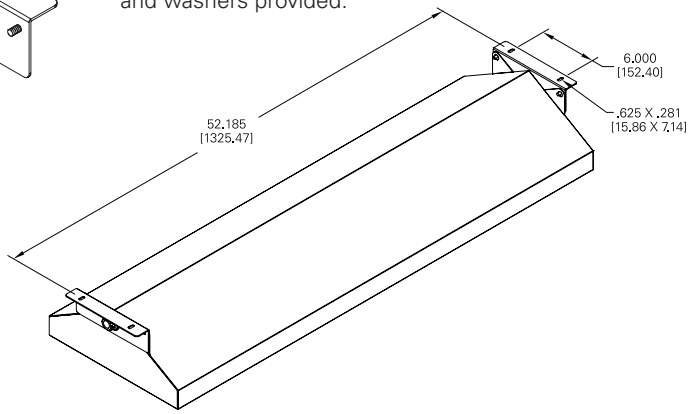

Dimensions:



	Dimensions in inches / centimeters						Nominal weight[B]	
Nominal length	A	B	C	D	E	Carton L x W x D (in.)	HBAB series lbs. (kg.)	HBSB series lbs. (kg.)
2 foot	26.59 (67.50)	2.00 (5.10)	6.53 (16.60)	15.72 (39.93)	6.00 (15.20)	28¾ x 16⅜ x 7⅛	19.0 (8.6)	26.0 (11.8)
4 foot	50.59 (128.50)	2.00 (5.10)	6.53 (16.60)	15.72 (39.93)	6.00 (15.20)	53 x 16⅜ x 7⅛	32.0 (14.5)	46.0 (20.8)

Temperature performance data:

T-code T3C: 55°C maximum ambient; 480 VAC maximum, 50/60 Hz

		Ambient temperature		
Lamp type	No. of lamps	40°C	50°C	55°C
T5	1-6	T3C	T3C	T3C
T5HO	1-6	T3C	T3C	T3C
T8	1-4	T5	T5	T5
T8	5-6	T3C	T3C	T3C
T8HO	1-4	T5	T5	T5

[B] Add 1.00 lb. for 3 or 4 lamps. Add 2.00 lbs. for 6 lamps.

www.eaton.com US: 1-866-764-5454 CAN: 1-800-265-0502 Copyright© 2023 Eaton