Dry-Type Transformer Family



2.1 DOE 2016 Energy-Efficient Transformers

Product Description V2-T2-2
Catalog Number Selection V2-T2-4
Product Selection V2-T2-4
Accessories V2-T2-28
Technical Data and Specifications V2-T2-28

2.2 DOE 2016 Energy-Efficient K-Factor Rated Transformers

Product Description V2-T2-29
Product Selection V2-T2-31
Accessories V2-T2-63
Technical Data and Specifications V2-T2-63

2.3 DOE 2016 Energy-Efficient Harmonic Mitigating Transformers

Product Description V2-T2-64
Catalog Number Selection V2-T2-66
Product Selection V2-T2-67
Accessories V2-T2-75
Technical Data and Specifications V2-T2-75

2.4 General-Purpose Encapsulated Transformers

Product Description V2-T2-79
Catalog Number Selection V2-T2-80
Product Selection V2-T2-80
Accessories V2-T2-95
Technical Data and Specifications V2-T2-95

2.5 Distribution Transformers

Motor Drive Isolation Transformers V2-T2-97
Mini–Power Centers V2-T2-105
Totally Enclosed Non-Ventilated Transformers V2-T2-109
Class I, Division 2, Hazardous Location Transformers V2-T2-112
Marine Duty Transformers V2-T2-115
Buck-Boost and Low-Voltage Lighting Transformers V2-T2-120
Medium-Voltage Dry-Type Distribution Transformers V2-T2-149

2.6 Transformer Standards, Technical Data and Accessories

Standards and Certifications V2-T2-161
Catalog Number Selection V2-T2-162
Product Selection V2-T2-165
Options and Accessories V2-T2-167
Technical Data and Specifications V2-T2-171
Glossary of Transformer Terms V2-T2-198
Frequently Asked Questions About Transformers V2-T2-202

2.7 Dimensions

Dimensions V2-T2-204

Revision notes

Volume 2—Commercial Distribution, CA08100003E

Tab 2—Transformers

Revision date	Section	Change page(s)	Description
04/29/2019	All	All	Updated to April 2019 print revision date

Powering Business Worldwide

Type DT-3



Contents

Description	*Page*
DOE 2016 Energy-Efficient Transformers	
Features, Benefits and Functions	**V2-T2-3**
Standards and Certifications	**V2-T2-3**
Catalog Number Selection	**V2-T2-4**
Product Selection	
Single-Phase Aluminum	**V2-T2-4**
Single-Phase Copper	**V2-T2-6**
Three-Phase Aluminum	**V2-T2-8**
Three-Phase Copper	**V2-T2-18**
Accessories	**V2-T2-28**
Technical Data and Specifications	**V2-T2-28**

Product Description

Note: The following pages provide listings for most standard transformer ratings and catalog numbers. For other ratings or catalog numbers not shown, or for special enclosure types (including stainless steel), refer to Eaton.

Types DS-3, DT-3

- Ventilated, NEMA 2 enclosure standard
- Suitable for indoor applications, outdoors when weathershields are also installed
- Upright mounting only
- 220°C insulation system
- 150°C rise standard; 115°C or 80°C rise optional
- Available in single-phase ratings 15–167 kVA, 600 volts primary (DS-3)
- Available in three-phase ratings 15–1500 kVA and up to 600 volts primary (DT-3)

Application Description

DOE 2016 compliant energy-efficient transformers are specifically designed to meet the energy efficiency standards set forth in "CFR Title 10 Chapter II Part 431, Appendix A of Subpart K 2016". Surveys have shown that the average loading of low-voltage dry-type distribution transformers, over a 24-hour period, is approximately 35%. DOE 2016 compliant transformers are optimized to offer maximum efficiency at 35% of nameplate rating.

The range of products covered by DOE 2016 is:

DOE 2016 Product Range

Rating	Voltage Class	Voltage
	Primary voltage	34.5 kV and below
	Secondary voltage	600V and below
Low-Voltage Dry-Type Rating	Single-phase	10–833 kVA
	Three-phase	15–2500 kVA
Liquid Rating	Single-phase	10–833 kVA
	Three-phase	15–2500 kVA

Transformers that are currently specifically excluded from the scope of CFR Title 10 Chapter II Part 431, Appendix A of Subpart K 2016 include:

- Liquid-filled transformers below 10 kVA
- Low-voltage dry-type transformers below 15 kVA
- AC and DC drives transformers
- Rectifier transformers designed for high harmonics
- Autotransformers
- Non-distribution transformers, such as UPS transformers
- Special impedance or regulation transformers
- Regulating transformers
- Sealed and non-ventilated transformers
- Machine tool transformers
- Welding transformers
- Transformers with tap ranges greater than 15%
- Transformers with a frequency other than 60 Hz
- Grounding transformers
- Testing transformers

Efficiency levels set forth in DOE 2016.

DOE 2016 Efficiency Levels

Low-Voltage Dry-Type Distribution Transformers (600V and below)

Single-Phase		Three-Phase	
kVA	**Efficiency**	**kVA**	**Efficiency**
15	97.70	15	97.89
25	98.00	30	98.23
37.5	98.20	45	98.40
50	98.30	75	98.60
75	98.50	112.5	98.74
100	98.60	150	98.83
167	98.70	225	98.94
250	98.80	300	99.02
333	98.90	500	99.14
—	—	750	99.23
—	—	1000	99.28

Features, Benefits and Functions

- 60 Hz operation (except as noted)
- Short-term overload capability as required by ANSI
- Meet NEMA ST-20 sound levels
- Transformer core and coil covered with a fungus-resistant varnish to seal out moisture and other contaminants, and prevent the growth of fungus
- The core and coil assembly is grounded to the transformer enclosure by means of a visible flexible copper ground strap. The copper ground strap is sized per the NEC to be a grounding conductor. Three-phase DOE 2016 efficient transformers are provided with a bonding ground bar attached to the bottom panel for compliance with NEC 450.10(A)
- Transformers manufactured in enclosures 939, 940, 942, 943, 944 and 945 are UL Listed to be installed indoors (without weathershields) with just 2 inches of clearance on the sides and behind the transformer
- Double neutral
- Meet federal energy efficiency requirements for low-voltage dry-type distribution transformers effective as of January 1, 2016
- cUL Energy Verified in accordance with energy standards: CFR Title 10 Chapter II Part 431, Appendix A of Subpart K and CSA C802.2-12 Update No. 1 May 2013 by Underwriters Laboratories Inc.

Standards and Certifications

- UL® listed

Listed

Energy Verified

Industry Standards

All Eaton low-voltage dry-type distribution transformers are built and tested in accordance with applicable NEMA, ANSI and IEEE Standards. All 600 volt class transformers are UL listed unless otherwise noted.

Seismically Qualified

Eaton manufactured low-voltage dry-type distribution transformers are seismically qualified and exceed requirements of the Uniform Building Code (UBC), International Building Code (IBC) and California Code Title 24.

Catalog Number Selection

Please refer to Section 2.7 **Page V2-T2-162**.

2

Product Selection

Additional Product Selection information begins on **Page V2-T2-165**.

Single-Phase—Type DS-3 60 Hz DOE 2016 Energy-Efficient—Aluminum Windings

208 Volts to 120/240 Volts

kVA	Temperature Rise °C	Frame	Wiring Diagram	Weight Lb (kg) ①	Type 3R WS Kit	Wallmount Bracket	Catalog Number
15	150	FR842A	E0260A	200 (91)	WS45A	WMB05	**T29M11S1516**
25		FR842A		275 (125)	WS45A	WMB05	**T29M11S2516**
37.5		FR843A		310 (141)	WS43A	WMB04	**T29M11S3716**
50		FR843A		390 (177)	WS43A	WMB04	**T29M11S5016**
75		FR844A	E0551A	650 (295)	WS44A	WMB04	**T29R11S7516**
100		FR844A	EA29R11	690 (313)	WS44A	WMB04	**T29R11S9916**

277 Volts to 120/240 Volts

kVA	Temperature Rise °C	Frame	Wiring Diagram	Weight Lb (kg) ①	Type 3R WS Kit	Wallmount Bracket	Catalog Number
15	150	FR842A	262C	210 (95)	WS45A	WMB05	**T27M11S1516**
25		FR842A		289 (131)	WS45A	WMB05	**T27M11S2516**
37.5		FR843A		326 (148)	WS43A	WMB04	**T27M11S3716**
50		FR843A		410 (186)	WS43A	WMB04	**T27M11S5016**
75		FR844A		683 (310)	WS44A	WMB04	**T27M11S7516**
100		FR844A		725 (329)	WS44A	WMB04	**T27M11S9916**

600 Volts to 120/240 Volts

kVA	Temperature Rise °C	Frame	Wiring Diagram	Weight Lb (kg) ①	Type 3R WS Kit	Wallmount Bracket	Catalog Number
15	150	FR842A	262B	212 (96)	WS45A	WMB05	**T60M11S1516**
25		FR842A		292 (133)	WS45A	WMB05	**T60M11S2516**
37.5		FR843A		329 (149)	WS43A	WMB04	**T60M11S3716**
50		FR843A		413 (188)	WS43A	WMB04	**T60M11S5016**
75		FR844A		689 (313)	WS44A	WMB04	**T60M11S7516**
100		FR844A		731 (332)	WS44A	WMB04	**T60M11S9916**

Notes

① Frames (dimensions and weights) subject to revision.

Additional voltage combinations are available. Contact your local Eaton sales office for assistance if the voltage you require is not included in this catalog.
For other ratings or catalog numbers not shown, or for special enclosure types (including stainless steel), refer to Eaton.
Frame drawings/dimensions information begins on **Page V2-T2-204**.

Single-Phase—Type DS-3 60 Hz DOE 2016 Energy-Efficient—Aluminum Windings

208 x 416 Volts to 120/240 Volts

kVA	Temperature Rise °C	Frame	Wiring Diagram	Weight Lb (kg) ①	Type 3R WS Kit	Wallmount Bracket	Catalog Number
15	150	FR842A	E03XF	204 (93)	WS45A	WMB05	**T18P11S1516**
25		FR842A		281 (128)	WS45A	WMB05	**T18P11S2516**
37.5		FR843A		316 (143)	WS43A	WMB04	**T18P11S3716**
50		FR843A		398 (181)	WS43A	WMB04	**T18P11S5016**
75		FR844A		663 (301)	WS44A	WMB04	**T18P11S7516**
100		FR844A		704 (320)	WS44A	WMB04	**T18P11S9916**

240 x 480 Volts to 120/240 Volts

kVA	Temperature Rise °C	Frame	Wiring Diagram	Weight Lb (kg) ①	Type 3R WS Kit	Wallmount Bracket	Catalog Number
15	150	FR842A	3XA	210 (95)	WS45A	WMB05	**T20P11S1516**
25		FR842A		289 (131)	WS45A	WMB05	**T20P11S2516**
37.5		FR843A		326 (148)	WS43A	WMB04	**T20P11S3716**
50		FR843A		410 (186)	WS43A	WMB04	**T20P11S5016**
75		FR844A		683 (310)	WS44A	WMB04	**T20P11S7516**
100		FR844A		725 (329)	WS44A	WMB04	**T20P11S9916**
167		FR814E	288A	1665 (756)	WS13	—	**T48M11S6716**
15	115	FR842A	3XA	212 (96)	WS45A	WMB05	**T20P11F1516**
25		FR842A		292 (133)	WS45A	WMB05	**T20P11F2516**
37.5		FR843A		329 (149)	WS43A	WMB04	**T20P11F3716**
50		FR843A		414 (188)	WS43A	WMB04	**T20P11F5016**
75		FR844A		689 (313)	WS44A	WMB04	**T20P11F7516**
100		FR844A		732 (332)	WS44A	WMB04	**T20P11F9916**
15	80	FR842A	3XA	289 (131)	WS45A	WMB05	**T20P11B1516**
25		FR843A		326 (148)	WS43A	WMB04	**T20P11B2516**
37.5		FR843A		410 (186)	WS43A	WMB04	**T20P11B3716**
50		FR844A		683 (310)	WS44A	WMB04	**T20P11B5016**
75		FR844A		725 (329)	WS44A	WMB04	**T20P11B7516**

Notes

① Frames (dimensions and weights) subject to revision.

Additional voltage combinations are available. Contact your local Eaton sales office for assistance if the voltage you require is not included in this catalog.
For other ratings or catalog numbers not shown, or for special enclosure types (including stainless steel), refer to Eaton.
Frame drawings/dimensions information begins on **Page V2-T2-204**.

Single-Phase—Type DS-3 60 Hz DOE 2016 Energy-Efficient—Copper Windings

208 Volts to 120/240 Volts

kVA	Temperature Rise °C	Frame	Wiring Diagram	Weight Lb (kg) ①	Type 3R WS Kit	Wallmount Bracket	Catalog Number
15	150	FR842A	E0260A	216 (98)	WS45A	WMB05	**T29M11S1516CU**
25		FR842A		295 (134)	WS45A	WMB05	**T29M11S2516CU**
37.5		FR843A		440 (200)	WS43A	WMB04	**T29M11S3716CU**
50		FR843A		450 (204)	WS43A	WMB04	**T29M11S5016CU**
75		FR844A	E0551A	890 (404)	WS44A	WMB04	**T29R11S7516CU**
100		FR844A		950 (431)	WS44A	WMB04	**T29R11S9916CU**

277 Volts to 120/240 Volts

kVA	Temperature Rise °C	Frame	Wiring Diagram	Weight Lb (kg) ①	Type 3R WS Kit	Wallmount Bracket	Catalog Number
15	150	FR842A	262C	238 (108)	WS45A	WMB05	**T27M11S1516CU**
25		FR842A		326 (148)	WS45A	WMB05	**T27M11S2516CU**
37.5		FR843A		485 (220)	WS43A	WMB04	**T27M11S3716CU**
50		FR843A		497 (225)	WS43A	WMB04	**T27M11S5016CU**
75		FR844A		982 (446)	WS44A	WMB04	**T27M11S7516CU**
100		FR844A		1048 (476)	WS44A	WMB04	**T27M11S9916CU**

600 Volts to 120/240 Volts

kVA	Temperature Rise °C	Frame	Wiring Diagram	Weight Lb (kg) ①	Type 3R WS Kit	Wallmount Bracket	Catalog Number
15	150	FR842A	262B	241 (109)	WS45A	WMB05	**T60M11S1516CU**
25		FR842A		329 (149)	WS45A	WMB05	**T60M11S2516CU**
37.5		FR843A		490 (222)	WS43A	WMB04	**T60M11S3716CU**
50		FR843A		501 (227)	WS43A	WMB04	**T60M11S5016CU**
75		FR844A		991 (450)	WS44A	WMB04	**T60M11S7516CU**
100		FR844A		1058 (480)	WS44A	WMB04	**T60M11S9916CU**

Notes

① Frames (dimensions and weights) subject to revision.

Additional voltage combinations are available. Contact your local Eaton sales office for assistance if the voltage you require is not included in this catalog.
For other ratings or catalog numbers not shown, or for special enclosure types (including stainless steel), refer to Eaton.
Frame drawings/dimensions information begins on **Page V2-T2-204**.

Single-Phase—Type DS-3 60 Hz DOE 2016 Energy-Efficient—Copper Windings

208 x 416 Volts to 120/240 Volts

kVA	Temperature Rise °C	Frame	Wiring Diagram	Weight Lb (kg) ①	Type 3R WS Kit	Wallmount Bracket	Catalog Number
15	150	FR842A	E03XF	246 (112)	WS45A	WMB05	**T18P11S1516CU**
25		FR842A		336 (153)	WS45A	WMB05	**T18P11S2516CU**
37.5		FR843A		500 (227)	WS43A	WMB04	**T18P11S3716CU**
50		FR843A		511 (232)	WS43A	WMB04	**T18P11S5016CU**
75		FR844A		1011 (459)	WS44A	WMB04	**T18P11S7516CU**
100		FR844A		1079 (490)	WS44A	WMB04	**T18P11S9916CU**

240 x 480 Volts to 120/240 Volts

kVA	Temperature Rise °C	Frame	Wiring Diagram	Weight Lb (kg) ①	Type 3R WS Kit	Wallmount Bracket	Catalog Number
15	150	FR842A	3XA	258 (117)	WS45A	WMB05	**T20P11S1516CU**
25		FR842A		353 (160)	WS45A	WMB05	**T20P11S2516CU**
37.5		FR843A		525 (238)	WS43A	WMB04	**T20P11S3716CU**
50		FR843A		537 (244)	WS43A	WMB04	**T20P11S5016CU**
75		FR844A		1062 (482)	WS44A	WMB04	**T20P11S7516CU**
100		FR844A		1133 (514)	WS44A	WMB04	**T20P11S9916CU**
167		FR814E	288A	1748 (794)	WS13	—	**T48M11S6716CU**
15	115	FR842A	3XA	218 (99)	WS45A	WMB05	**T20P11F1516CU**
25		FR842A		298 (135)	WS45A	WMB05	**T20P11F2516CU**
37.5		FR843A		444 (202)	WS43A	WMB04	**T20P11F3716CU**
50		FR843A		455 (207)	WS43A	WMB04	**T20P11F5016CU**
75		FR844A		899 (408)	WS44A	WMB04	**T20P11F7516CU**
100		FR844A		960 (436)	WS44A	WMB04	**T20P11F9916CU**
15	80	FR842A	3XA	353 (160)	WS45A	WMB05	**T20P11B1516CU**
25		FR843A		525 (238)	WS43A	WMB04	**T20P11B2516CU**
37.5		FR843A		537 (244)	WS43A	WMB04	**T20P11B3716CU**
50		FR844A		1062 (482)	WS44A	WMB04	**T20P11B5016CU**
75		FR844A		1133 (514)	WS44A	WMB04	**T20P11B7516CU**

Notes

① Frames (dimensions and weights) subject to revision.

Additional voltage combinations are available. Contact your local Eaton sales office for assistance if the voltage you require is not included in this catalog.
For other ratings or catalog numbers not shown, or for special enclosure types (including stainless steel), refer to Eaton.
Frame drawings/dimensions information begins on **Page V2-T2-204**.

Three-Phase—Type DT-3 60 Hz DOE 2016 Energy-Efficient— Aluminum Windings

208 Delta Volts to 208Y/120 Volts

kVA	Temperature Rise °C	Frame	Wiring Diagram	Weight Lb (kg) ①	Type 3R WS Kit	Wallmount Bracket	Catalog Number
15	150	FR939	280E	233 (106)	WS57	WMB05	**V29M28T1516**
30		FR940		400 (182)	WS58	WMB05	**V29M28T3016**
45		FR940		442 (201)	WS58	WMB05	**V29M28T4516**
75		FR942		602 (273)	WS59	WMB04	**V29M28T7516**
112.5		FR943	324A	976 (443)	WS60	WMB04	**V29R28T1216**
150		FR943		1254 (569)	WS60	WMB04	**V29R28T4916**
225		FR944		1624 (737)	WS61	—	**V29R28T2216**
300		Contact local Eaton representative					**V29E28T3316**
500							**V29E28T5516**
15	115	FR939	280E	243 (110)	WS57	WMB05	**V29M28F1516**
30		FR940		419 (190)	WS58	WMB05	**V29M28F3016**
45		FR940		450 (205)	WS58	WMB05	**V29M28F4516**
75		FR942		635 (288)	WS59	WMB04	**V29M28F7516**
112.5		FR943	324A	1031 (468)	WS60	WMB04	**V29R28F1216**
150		FR943		1316 (597)	WS60	WMB04	**V29R28F4916**
225		FR944		1715 (778)	WS61	—	**V29R28F2216**
300		Contact local Eaton representative					**V29R28F3316**
500							**V29E28F5516**
15	80	FR939	280E	249 (113)	WS57	WMB05	**V29M28B1516**
30		FR940		455 (206)	WS58	WMB05	**V29M28B3016**
45		FR942		599 (272)	WS59	WMB04	**V29M28B4516**
75		FR943		1031 (468)	WS60	WMB04	**V29M28B7516**
112.5		FR943	324A	1338 (607)	WS60	WMB04	**V29R28B1216**
150		FR944		1709 (776)	WS61	—	**V29R28B4916**
225		Contact local Eaton representative					**V29R28B2216**
300							**V29R28B3316**

Notes

① Frames (dimensions and weights) subject to revision.

Additional voltage combinations are available. Contact your local Eaton sales office for assistance if the voltage you require is not included in this catalog.
For other ratings or catalog numbers not shown, or for special enclosure types (including stainless steel), refer to Eaton.
Frame drawings/dimensions information begins on **Page V2-T2-204**.

Three-Phase—Type DT-3 60 Hz DOE 2016 Energy-Efficient— Aluminum Windings

208 Delta Volts to 480Y/277 Volts

kVA	Temperature Rise °C	Frame	Wiring Diagram	Weight Lb (kg) ①	Type 3R WS Kit	Wallmount Bracket	Catalog Number
15	150	FR939	E0342B	225 (102)	WS57	WMB05	**V29M47T1516**
30		FR940		402 (183)	WS58	WMB05	**V29M47T3016**
45		FR940		436 (198)	WS58	WMB05	**V29M47T4516**
75		FR942		623 (283)	WS59	WMB04	**V29M47T7516**
112.5		FR943	E0351A	987 (448)	WS60	WMB04	**V29R47T1216**
150		FR943		1253 (569)	WS60	WMB04	**V29R47T4916**
225		FR944		2257 (1025)	WS61	—	**V29R47T2216**
300		Contact local Eaton representative					**V29E47T3316**
500							**V29E47T5516**
15	115	FR939	E0342B	250 (114)	WS57	WMB05	**V29M47F1516**
30		FR940		442 (201)	WS58	WMB05	**V29M47F3016**
45		FR940		598 (271)	WS58	WMB05	**V29M47F4516**
75		FR942		617 (280)	WS59	WMB04	**V29M47F7516**
112.5		FR943	E0351A	977 (444)	WS60	WMB04	**V29R47F1216**
150		FR943		2257 (1025)	WS60	WMB04	**V29R47F4916**
225		FR944		2450 (1112)	WS61	—	**V29R47F2216**
300		Contact local Eaton representative					**V29E47F3316**
500							**V29E47F5516**
15	80	FR939	E0342B	249 (113)	WS57	WMB05	**V29M47B1516**
30		FR940		455 (206)	WS58	WMB05	**V29M47B3016**
45		FR942		599 (272)	WS59	WMB04	**V29M47B4516**
75		FR943		1031 (468)	WS60	WMB04	**V29M47B7516**
112.5		FR943	E0351A	1338 (607)	WS60	WMB04	**V29R47B1216**
150		FR944		1709 (776)	WS61	—	**V29R47B4916**
225		Contact local Eaton representative					**V29R47B2216**
300							**V29E47B3316**

Notes

① Frames (dimensions and weights) subject to revision.

Additional voltage combinations are available. Contact your local Eaton sales office for assistance if the voltage you require is not included in this catalog.
For other ratings or catalog numbers not shown, or for special enclosure types (including stainless steel), refer to Eaton.
Frame drawings/dimensions information begins on **Page V2-T2-204**.

Three-Phase—Type DT-3 60 Hz DOE 2016 Energy-Efficient— Aluminum Windings

240 Delta Volts to 208Y/120 Volts

kVA	Temperature Rise °C	Frame	Wiring Diagram	Weight Lb (kg) ①	Type 3R WS Kit	Wallmount Bracket	Catalog Number
15	150	FR939	280C	236 (107)	WS57	WMB05	**V24M28T1516**
30		FR940		402 (183)	WS58	WMB05	**V24M28T3016**
45		FR940		448 (203)	WS58	WMB05	**V24M28T4516**
75		FR942		622 (282)	WS59	WMB04	**V24M28T7516**
112.5		FR943	324B	1022 (464)	WS60	WMB04	**V24R28T1216**
150		FR943		1191 (541)	WS60	WMB04	**V24R28T4916**
225		FR944		1678 (762)	WS61	—	**V24R28T2216**
300		FR945		2415 (1096)	WS62	—	**V24R28T3316**
500		Contact local Eaton representative					**V24E28T5516**
15	115	FR939	280C	243 (110)	WS57	WMB05	**V24M28F1516**
30		FR940		419 (190)	WS58	WMB05	**V24M28F3016**
45		FR940		450 (205)	WS58	WMB05	**V24M28F4516**
75		FR942		635 (288)	WS59	WMB04	**V24M28F7516**
112.5		FR943	324B	1031 (468)	WS60	WMB04	**V24R28F1216**
150		FR943		1316 (597)	WS60	WMB04	**V24R28F4916**
225		Contact local Eaton representative					**V24E47F2216**
300							**V24R28F3316**
500							**V24E28F5516**
15	80	FR939	280C	249 (113)	WS57	WMB05	**V24M28B1516**
30		FR940		455 (206)	WS58	WMB05	**V24M28B3016**
45		FR942		599 (272)	WS59	WMB04	**V24M28B4516**
75		FR943		1031 (468)	WS60	WMB04	**V24M28B7516**
112.5		FR943	324B	1338 (607)	WS60	WMB04	**V24R28B1216**
150		FR944		1709 (776)	WS61	—	**V24R28B4916**
225		Contact local Eaton representative					**V24E28B2216**
300							**V24E28B3316**

Notes

① Frames (dimensions and weights) subject to revision.

Additional voltage combinations are available. Contact your local Eaton sales office for assistance if the voltage you require is not included in this catalog.
For other ratings or catalog numbers not shown, or for special enclosure types (including stainless steel), refer to Eaton.
Frame drawings/dimensions information begins on **Page V2-T2-204**.

Three-Phase—Type DT-3 60 Hz DOE 2016 Energy-Efficient— Aluminum Windings

240 Delta Volts to 480Y/277 Volts

kVA	Temperature Rise °C	Frame	Wiring Diagram	Weight Lb (kg) ①	Type 3R WS Kit	Wallmount Bracket	Catalog Number
15	150	FR939	E0317A	224 (102)	WS57	WMB05	**V24M47T1516**
30		FR940		422 (192)	WS58	WMB05	**V24M47T3016**
45		FR940		444 (202)	WS58	WMB05	**V24M47T4516**
75		FR942		635 (288)	WS59	WMB04	**V24M47T7516**
112.5		FR943	E0351C	1017 (462)	WS60	WMB04	**V24R47T1216**
150		FR943		1275 (579)	WS60	WMB04	**V24R47T4916**
225		FR944		2274 (1032)	WS61	—	**V24R47T2216**
300		Contact local Eaton representative					**V24E47T3316**
500							**V24E47T5516**
15	115	FR939	E0317A	243 (110)	WS57	WMB05	**V24M47F1516**
30		FR940		419 (190)	WS58	WMB05	**V24M47F3016**
45		FR940		450 (205)	WS58	WMB05	**V24M47F4516**
75		FR942		635 (288)	WS59	WMB04	**V24M47F7516**
112.5		FR943	E0351C	1031 (468)	WS60	WMB04	**V24R47F1216**
150		FR943		1316 (597)	WS60	WMB04	**V24R47F4916**
225		Contact local Eaton representative					**V24E47F2216**
300							**V24E47F3316**
500							**V24E47F5516**
15	80	FR939	E0317A	249 (113)	WS57	WMB05	**V24M47B1516**
30		FR940		455 (206)	WS58	WMB05	**V24M47B3016**
45		FR942		599 (272)	WS59	WMB04	**V24M47B4516**
75		FR943		1031 (468)	WS60	WMB04	**V24M47B7516**
112.5		FR943	E0351C	1338 (607)	WS60	WMB04	**V24R47B1216**
150		FR944		1709 (776)	WS61	—	**V24R47B4916**
225		Contact local Eaton representative					**V24E47B2216**
300							**V24E47B3316**

Notes

① Frames (dimensions and weights) subject to revision.

Additional voltage combinations are available. Contact your local Eaton sales office for assistance if the voltage you require is not included in this catalog.
For other ratings or catalog numbers not shown, or for special enclosure types (including stainless steel), refer to Eaton.
Frame drawings/dimensions information begins on **Page V2-T2-204**.

Three-Phase—Type DT-3 60 Hz DOE 2016 Energy-Efficient— Aluminum Windings

480 Delta Volts to 208Y/120 Volts

kVA	Temperature Rise °C	Frame	Wiring Diagram	Weight Lb (kg) ①	Type 3R WS Kit	Wallmount Bracket	Catalog Number
15	150	FR939	280B	225 (102)	WS57	WMB05	**V48M28T1516**
30		FR940		409 (186)	WS58	WMB05	**V48M28T3016**
45		FR940		416 (189)	WS58	WMB05	**V48M28T4516**
75		FR942		570 (259)	WS59	WMB04	**V48M28T7516**
112.5		FR943		976 (443)	WS60	WMB04	**V48M28T1216**
150		FR943		1239 (563)	WS60	WMB04	**V48M28T4916**
225		FR944		1624 (737)	WS61	—	**V48M28T2216**
300		FR945		2283 (1036)	WS62	—	**V48M28T3316**
500		Contact local Eaton representative					**V48M28T5516**
750							**V48D28T7716**
1000							**V48D28T1116**
15	115	FR939	280B	231 (105)	WS57	WMB05	**V48M28F1516**
30		FR940		399 (181)	WS58	WMB05	**V48M28F3016**
45		FR940		429 (195)	WS58	WMB05	**V48M28F4516**
75		FR942		605 (275)	WS59	WMB04	**V48M28F7516**
112.5		FR943		982 (446)	WS60	WMB04	**V48M28F1216**
150		FR943		1253 (569)	WS60	WMB04	**V48M28F4916**
225		FR944		1633 (741)	WS61	—	**V48M28F2216**
300		FR945		2104 (955)	WS62	—	**V48M28F3316**
500		Contact local Eaton representative					**V48M28F5516**
15	80	FR939	280B	237 (108)	WS57	WMB05	**V48M28B1516**
30		FR940		433 (197)	WS58	WMB05	**V48M28B3016**
45		FR942		570 (259)	WS58	WMB05	**V48M28B4516**
75		FR943		982 (446)	WS59	WMB04	**V48M28B7516**
112.5		FR943		1274 (578)	WS60	WMB04	**V48M28B1216**
150		FR944		1628 (739)	WS60	WMB04	**V48M28B4916**
225		FR945		2207 (1002)	WS61	—	**V48M28B2216**
300		FR924		2877 (1306)	WS40	—	**V48M28B3316**
500		Contact local Eaton representative					**V48M28B5516**

Notes

① Frames (dimensions and weights) subject to revision.

Additional voltage combinations are available. Contact your local Eaton sales office for assistance if the voltage you require is not included in this catalog.
For other ratings or catalog numbers not shown, or for special enclosure types (including stainless steel), refer to Eaton.
Frame drawings/dimensions information begins on **Page V2-T2-204**.

Three-Phase—Type DT-3 60 Hz DOE 2016 Energy-Efficient— Aluminum Windings

480 Delta Volts to 240 Delta Volts with 120 Volt Lighting Tap on Phase B ①

kVA	Temperature Rise °C	Frame	Wiring Diagram	Weight Lb (kg) ②	Type 3R WS Kit	Wallmount Bracket	Catalog Number
15	150	FR939	282B	231 (105)	WS57	WMB05	**V48M22T1516**
30		FR940		399 (181)	WS58	WMB05	**V48M22T3016**
45		FR940		426 (193)	WS58	WMB05	**V48M22T4516**
75		FR942		581 (264)	WS59	WMB04	**V48M22T7516**
112.5		FR943		964 (438)	WS60	WMB04	**V48M22T1216**
150		FR943		1275 (579)	WS60	WMB04	**V48M22T4916**
225		FR944		1618 (735)	WS61	—	**V48M22T2216**
300		FR945		2437 (1106)	WS62	—	**V48M22T3316**
500		Contact local Eaton representative					**V48M22T5516**
750							**V48D22T7716**
1000							**V48D22T1116**
15	115	FR939	282B	250 (114)	WS57	WMB05	**V48M22F1516**
30		FR940		405 (184)	WS58	WMB05	**V48M22F3016**
45		FR940		428 (194)	WS58	WMB05	**V48M22F4516**
75		FR942		612 (278)	WS59	WMB04	**V48M22F7516**
112.5		FR943		975 (443)	WS60	WMB04	**V48M22F1216**
150		FR943		1300 (590)	WS60	WMB04	**V48M22F4916**
225		FR944		1732 (786)	WS61	—	**V48M22F2216**
300		FR945		1732 (786)	WS62	—	**V48M22F3316**
500		Contact local Eaton representative					**V48M22F5516**
15	80	FR939	282B	249 (113)	WS57	WMB05	**V48M22B1516**
30		FR940		455 (206)	WS58	WMB05	**V48M22B3016**
45		FR942		599 (272)	WS59	WMB04	**V48M22B4516**
75		FR943		1031 (468)	WS60	WMB04	**V48M22B7516**
112.5		FR943		1338 (607)	WS60	WMB04	**V48M22B1216**
150		FR944		1709 (776)	WS61	—	**V48M22B4916**
225		FR945		2317 (1052)	WS62	—	**V48M22B2216**
300		Contact local Eaton representative					**V48M22B3316**
500							**V48M22B5516**

Notes

① Lighting tap limited to 5% of nameplate full load capacity.

② Frames (dimensions and weights) subject to revision.

Additional voltage combinations are available. Contact your local Eaton sales office for assistance if the voltage you require is not included in this catalog.
For other ratings or catalog numbers not shown, or for special enclosure types (including stainless steel), refer to Eaton.
Frame drawings/dimensions information begins on **Page V2-T2-204**.

Three-Phase—Type DT-3 60 Hz DOE 2016 Energy-Efficient— Aluminum Windings

480 Delta Volts to 400Y/231 Volts

kVA	Temperature Rise °C	Frame	Wiring Diagram	Weight Lb (kg) ①	Type 3R WS Kit	Wallmount Bracket	Catalog Number
15	150	FR939	280B	233 (106)	WS57	WMB05	**V48M34T1516**
30		FR940		399 (181)	WS58	WMB05	**V48M34T3016**
45		FR940		416 (189)	WS58	WMB05	**V48M34T4516**
75		FR942		614 (279)	WS59	WMB04	**V48M34T7516**
112.5		FR943		984 (447)	WS60	WMB04	**V48M34T1216**
150		FR943		1240 (563)	WS60	WMB04	**V48M34T4916**
225		FR944		1723 (782)	WS61	—	**V48M34T2216**
300		FR945		2347 (1066)	WS62	—	**V48M34T3316**
500		Contact local Eaton representative					**V48M34T5516**
15	115	FR939	280B	243 (110)	WS57	WMB05	**V48M34F1516**
30		FR940		419 (190)	WS58	WMB05	**V48M34F3016**
45		FR940		450 (205)	WS58	WMB05	**V48M34F4516**
75		FR942		635 (288)	WS59	WMB04	**V48M34F7516**
112.5		FR943		1031 (468)	WS60	WMB04	**V48M34F1216**
150		FR943		1316 (597)	WS60	WMB04	**V48M34F4916**
225		FR944		1715 (778)	WS61	—	**V48M34F2216**
300		FR945		2209 (1003)	WS62	—	**V48M34F3316**
500		Contact local Eaton representative					**V48M34F5516**
15	80	FR939	280B	249 (113)	WS57	WMB05	**V48M34B1516**
30		FR940		455 (206)	WS58	WMB05	**V48M34B3016**
45		FR942		599 (272)	WS59	WMB04	**V48M34B4516**
75		FR943		1031 (468)	WS60	WMB04	**V48M34B7516**
112.5		FR943		1338 (607)	WS60	WMB04	**V48M34B1216**
150		FR944		1709 (776)	WS61	—	**V48M34B4916**
225		FR945		2317 (1052)	WS62	—	**V48M34B2216**
300		FR924		1971 (895)	WS40	—	**V48M34B3316**

Notes

① Frames (dimensions and weights) subject to revision.

Additional voltage combinations are available. Contact your local Eaton sales office for assistance if the voltage you require is not included in this catalog.
For other ratings or catalog numbers not shown, or for special enclosure types (including stainless steel), refer to Eaton.
Frame drawings/dimensions information begins on **Page V2-T2-204**.

Three-Phase—Type DT-3 60 Hz DOE 2016 Energy-Efficient— Aluminum Windings

480 Delta Volts to 480Y/277 Volts

kVA	Temperature Rise °C	Frame	Wiring Diagram	Weight Lb (kg) ①	Type 3R WS Kit	Wallmount Bracket	Catalog Number
15	150	FR939	280B	227 (103)	WS57	WMB05	**V48M47T1516**
30		FR940		395 (179)	WS58	WMB05	**V48M47T3016**
45		FR940		433 (197)	WS58	WMB05	**V48M47T4516**
75		FR942		576 (262)	WS59	WMB04	**V48M47T7516**
112.5		FR943		970 (440)	WS60	WMB04	**V48M47T1216**
150		FR943		1253 (569)	WS60	WMB04	**V48M47T4916**
225		FR944		1912 (868)	WS61	—	**V48M47T2216**
300		FR945		2294 (1041)	WS62	—	**V48M47T3316**
500		Contact local Eaton representative					**V48M47T5516**
15	115	FR939	280B	243 (110)	WS57	WMB05	**V48M47F1516**
30		FR940		419 (190)	WS58	WMB05	**V48M47F3016**
45		FR940		450 (205)	WS58	WMB05	**V48M47F4516**
75		FR942		635 (288)	WS59	WMB04	**V48M47F7516**
112.5		FR943		1031 (468)	WS60	WMB04	**V48M47F1216**
150		FR943		1316 (597)	WS60	WMB04	**V48M47F4916**
225		FR944		1715 (778)	WS61	—	**V48M47F2216**
300		FR945		2209 (1003)	WS62	—	**V48M47F3316**
500		Contact local Eaton representative					**V48M47F5516**
15	80	FR939	280B	249 (113)	WS57	WMB05	**V48M47B1516**
30		FR940		455 (206)	WS58	WMB05	**V48M47B3016**
45		FR942		599 (272)	WS59	WMB04	**V48M47B4516**
75		FR943		1031 (468)	WS60	WMB04	**V48M47B7516**
112.5		FR943		1338 (607)	WS60	WMB04	**V48M47B1216**
150		FR944		1709 (776)	WS61	—	**V48M47B4916**
225		FR945		2317 (1052)	WS62	—	**V48M47B2216**
300		FR924		1971 (895)	WS40	—	**V48M47B3316**

Notes

① Frames (dimensions and weights) subject to revision.

Additional voltage combinations are available. Contact your local Eaton sales office for assistance if the voltage you require is not included in this catalog.
For other ratings or catalog numbers not shown, or for special enclosure types (including stainless steel), refer to Eaton.
Frame drawings/dimensions information begins on **Page V2-T2-204**.

Three-Phase—Type DT-3 60 Hz DOE 2016 Energy-Efficient— Aluminum Windings

600 Delta Volts to 208Y/120 Volts

kVA	Temperature Rise °C	Frame	Wiring Diagram	Weight Lb (kg) ①	Type 3R WS Kit	Wallmount Bracket	Catalog Number
15	150	FR939	280A	226 (103)	WS57	WMB05	**V60M28T1516**
30		FR940		396 (180)	WS58	WMB05	**V60M28T3016**
45		FR940		433 (197)	WS58	WMB05	**V60M28T4516**
75		FR942		610 (277)	WS59	WMB04	**V60M28T7516**
112.5		FR943		1000 (454)	WS60	WMB04	**V60M28T1216**
150		FR943		1250 (568)	WS60	WMB04	**V60M28T4916**
225		FR944		1650 (749)	WS61	—	**V60M28T2216**
300		FR945		2300 (1044)	WS62	—	**V60M28T3316**
500		Contact local Eaton representative					**V60M28T5516**
15	115	FR939	280A	243 (110)	WS57	WMB05	**V60M28F1516**
30		FR940		419 (190)	WS58	WMB05	**V60M28F3016**
45		FR940		450 (205)	WS58	WMB05	**V60M28F4516**
75		FR942		635 (288)	WS59	WMB04	**V60M28F7516**
112.5		FR943		1031 (468)	WS60	WMB04	**V60M28F1216**
150		FR943		1316 (597)	WS60	WMB04	**V60M28F4916**
225		FR944		1715 (778)	WS61	—	**V60M28F2216**
300		FR945		2209 (1003)	WS62	—	**V60M28F3316**
500		Contact local Eaton representative					**V60M28F5516**
15	80	FR939	280A	249 (113)	WS57	WMB05	**V60M28B1516**
30		FR940		455 (206)	WS58	WMB05	**V60M28B3016**
45		FR942		599 (272)	WS59	WMB04	**V60M28B4516**
75		FR943		1031 (468)	WS60	WMB04	**V60M28B7516**
112.5		FR943		1338 (607)	WS60	WMB04	**V60M28B1216**
150		FR944		1709 (776)	WS61	—	**V60M28B4916**
225		FR945		2317 (1052)	WS62	—	**V60M28B2216**
300		FR924		1971 (895)	WS40	—	**V60M28B3316**

Notes

① Frames (dimensions and weights) subject to revision.

Additional voltage combinations are available. Contact your local Eaton sales office for assistance if the voltage you require is not included in this catalog.
For other ratings or catalog numbers not shown, or for special enclosure types (including stainless steel), refer to Eaton.
Frame drawings/dimensions information begins on **Page V2-T2-204**.

Three-Phase—Type DT-3 60 Hz DOE 2016 Energy-Efficient— Aluminum Windings

600 Delta Volts to 480Y/277 Volts

kVA	Temperature Rise °C	Frame	Wiring Diagram	Weight Lb (kg) ①	Type 3R WS Kit	Wallmount Bracket	Catalog Number
15	150	FR939	280A	250 (114)	WS57	WMB05	**V60M47T1516**
30		FR940		435 (197)	WS58	WMB05	**V60M47T3016**
45		FR940		476 (216)	WS58	WMB05	**V60M47T4516**
75		FR942		634 (288)	WS59	WMB04	**V60M47T7516**
112.5		FR943		1067 (484)	WS60	WMB04	**V60M47T1216**
150		FR943		1378 (626)	WS60	WMB04	**V60M47T4916**
225		FR944		2103 (955)	WS61	—	**V60M47T2216**
300		FR945		2523 (1145)	WS62	—	**V60M47T3316**
500		Contact local Eaton representative					**V60M47T5516**
15	115	FR939	280A	243 (110)	WS57	WMB05	**V60M47F1516**
30		FR940		419 (190)	WS58	WMB05	**V60M47F3016**
45		FR940		450 (205)	WS58	WMB05	**V60M47F4516**
75		FR942		635 (288)	WS59	WMB04	**V60M47F7516**
112.5		FR943		1031 (468)	WS60	WMB04	**V60M47F1216**
150		FR943		1316 (597)	WS60	WMB04	**V60M47F4916**
225		FR944		1715 (778)	WS61	—	**V60M47F2216**
300		FR945		2209 (1003)	WS62	—	**V60M47F3316**
500		Contact local Eaton representative					**V60M47F5516**
15	80	FR939	280A	249 (113)	WS57	WMB05	**V60M47B1516**
30		FR940		455 (206)	WS58	WMB05	**V60M47B3016**
45		FR942		599 (272)	WS59	WMB04	**V60M47B4516**
75		FR943		1031 (468)	WS60	WMB04	**V60M47B7516**
112.5		FR943		1338 (607)	WS60	WMB04	**V60M47B1216**
150		FR944		1709 (776)	WS61	—	**V60M47B4916**
225		FR945		2317 (1052)	WS62	—	**V60M47B2216**
300		FR924		1971 (895)	WS40	—	**V60M47B3316**

Notes

① Frames (dimensions and weights) subject to revision.

Additional voltage combinations are available. Contact your local Eaton sales office for assistance if the voltage you require is not included in this catalog.
For other ratings or catalog numbers not shown, or for special enclosure types (including stainless steel), refer to Eaton.
Frame drawings/dimensions information begins on **Page V2-T2-204**.

Three-Phase—Type DT-3 60 Hz DOE 2016 Energy-Efficient— Copper Windings

208 Delta Volts to 208Y/120 Volts

kVA	Temperature Rise °C	Frame	Wiring Diagram	Weight Lb (kg) ①	Type 3R WS Kit	Wallmount Bracket	Catalog Number
15	150	FR939	280E	237 (108)	WS57	WMB05	**V29M28T1516CU**
30		FR940		424 (192)	WS58	WMB05	**V29M28T3016CU**
45		FR940		499 (227)	WS58	WMB05	**V29M28T4516CU**
75		FR942		678 (308)	WS59	WMB04	**V29M28T7516CU**
112.5		FR943	324A	1292 (587)	WS60	WMB04	**V29R28T1216CU**
150		FR943		1410 (640)	WS60	WMB04	**V29R28T4916CU**
225		FR944		1760 (799)	WS61	—	**V29R28T2216CU**
300		FR945		2361 (1072)	WS62	—	**V29R28T3316CU**
500		Contact local Eaton representative					**V29E28T5516CU**
15	115	FR939	280E	253 (115)	WS57	WMB05	**V29M28F1516CU**
30		FR940		455 (206)	WS58	WMB05	**V29M28F3016CU**
45		FR940		495 (225)	WS58	WMB05	**V29M28F4516CU**
75		FR942		698 (317)	WS59	WMB04	**V29M28F7516CU**
112.5		FR943	324A	1335 (606)	WS60	WMB04	**V29R28F1216CU**
150		FR943		1493 (678)	WS60	WMB04	**V29R28F4916CU**
225		FR944		2186 (992)	WS61	—	**V29R28F2216CU**
300		FR945		2696 (1224)	WS62	—	**V29R28F3316CU**
500		Contact local Eaton representative					**V29E28F5516CU**
15	80	FR939	280E	251 (114)	WS57	WMB05	**V29M28B1516CU**
30		FR940		489 (222)	WS58	WMB05	**V29M28B3016CU**
45		FR942		700 (318)	WS59	WMB04	**V29M28B4516CU**
75		FR943		1204 (547)	WS60	WMB04	**V29M28B7516CU**
112.5		FR943	324A	1454 (660)	WS60	WMB04	**V29R28B1216CU**
150		FR944		1990 (903)	WS61	—	**V29R28B4916CU**
225		FR945		2504 (1137)	WS62	—	**V29R28B2216CU**
300		Contact local Eaton representative					**V29R28B3316CU**

Notes

① Frames (dimensions and weights) subject to revision.

Additional voltage combinations are available. Contact your local Eaton sales office for assistance if the voltage you require is not included in this catalog.
For other ratings or catalog numbers not shown, or for special enclosure types (including stainless steel), refer to Eaton.
Frame drawings/dimensions information begins on **Page V2-T2-204**.

Three-Phase—Type DT-3 60 Hz DOE 2016 Energy-Efficient— Copper Windings

208 Delta Volts to 480Y/277 Volts

kVA	Temperature Rise °C	Frame	Wiring Diagram	Weight Lb (kg) ①	Type 3R WS Kit	Wallmount Bracket	Catalog Number
15	150	FR939	E0342B	245 (111)	WS57	WMB05	**V29M47T1516CU**
30		FR940		428 (194)	WS58	WMB05	**V29M47T3016CU**
45		FR940		503 (228)	WS58	WMB05	**V29M47T4516CU**
75		FR942		676 (307)	WS59	WMB04	**V29M47T7516CU**
112.5		FR943	E0351A	1283 (582)	WS60	WMB04	**V29R47T1216CU**
150		FR943		1432 (650)	WS60	WMB04	**V29R47T4916CU**
225		Contact local Eaton representative					**V29E47T2216CU**
300							**V29E47T3316CU**
500							**V29E47T5516CU**
15	115	FR939	E0342B	247 (112)	WS57	WMB05	**V29M47F1516CU**
30		FR940		434 (197)	WS58	WMB05	**V29M47F3016CU**
45		FR940		600 (272)	WS58	WMB05	**V29M47F4516CU**
75		FR942		682 (310)	WS59	WMB04	**V29M47F7516CU**
112.5		FR943	E0351A	1154 (524)	WS60	WMB04	**V29R47F1216CU**
150		FR943		1500 (681)	WS60	WMB04	**V29R47F4916CU**
225		Contact local Eaton representative					**V29E47F2216CU**
300							**V29E47F3316CU**
500							**V29E47F5516CU**
15	80	FR939	E0342B	251 (114)	WS57	WMB05	**V29M47B1516CU**
30		FR940		489 (222)	WS58	WMB05	**V29M47B3016CU**
45		FR942		700 (318)	WS59	WMB04	**V29M47B4516CU**
75		FR943		1204 (547)	WS60	WMB04	**V29M47B7516CU**
112.5		FR943	E0351A	1454 (660)	WS60	WMB04	**V29R47B1216CU**
150		FR944		1990 (903)	WS61	—	**V29R47B4916CU**
225		Contact local Eaton representative					**V29E47B2216CU**
300							**V29E47B3316CU**

Notes

① Frames (dimensions and weights) subject to revision.

Additional voltage combinations are available. Contact your local Eaton sales office for assistance if the voltage you require is not included in this catalog.
For other ratings or catalog numbers not shown, or for special enclosure types (including stainless steel), refer to Eaton.
Frame drawings/dimensions information begins on **Page V2-T2-204**.

Three-Phase—Type DT-3 60 Hz DOE 2016 Energy-Efficient— Copper Windings

240 Delta Volts to 208Y/120 Volts

kVA	Temperature Rise °C	Frame	Wiring Diagram	Weight Lb (kg) ①	Type 3R WS Kit	Wallmount Bracket	Catalog Number
15	150	FR939	280C	238 (108)	WS57	WMB05	**V24M28T1516CU**
30		FR940		458 (208)	WS58	WMB05	**V24M28T3016CU**
45		FR940		478 (217)	WS58	WMB05	**V24M28T4516CU**
75		FR942		697 (316)	WS59	WMB04	**V24M28T7516CU**
112.5		FR943	324B	1103 (501)	WS60	WMB04	**V24R28T1216CU**
150		FR943		1283 (582)	WS60	WMB04	**V24R28T4916CU**
225		FR944		1500 (681)	WS61	—	**V24R28T2216CU**
300		FR945		2700 (1226)	WS62	—	**V24R28T3316CU**
500		Contact local Eaton representative					**V24E28T5516CU**
15	115	FR939	280C	253 (115)	WS57	WMB05	**V24M28F1516CU**
30		FR940		455 (206)	WS58	WMB05	**V24M28F3016CU**
45		FR940		495 (225)	WS58	WMB05	**V24M28F4516CU**
75		FR942		698 (317)	WS59	WMB04	**V24M28F7516CU**
112.5		FR943	324B	1335 (606)	WS60	WMB04	**V24R28F1216CU**
150		FR943		1493 (678)	WS60	WMB04	**V24R28F4916CU**
225		FR944		2186 (992)	WS61	—	**V24R28F2216CU**
300		FR945		2696 (1224)	WS62	—	**V24R28F3316CU**
500		Contact local Eaton representative					**V24E28F5516CU**
15	80	FR939	280C	251 (114)	WS57	WMB05	**V24M28B1516CU**
30		FR940		489 (222)	WS58	WMB05	**V24M28B3016CU**
45		FR942		700 (318)	WS59	WMB04	**V24M28B4516CU**
75		FR943		1204 (547)	WS60	WMB04	**V24M28B7516CU**
112.5		FR943	324B	1454 (660)	WS60	WMB04	**V24R28B1216CU**
150		FR944		1990 (903)	WS61	—	**V24R28B4916CU**
225		FR945		2504 (1137)	WS62	—	**V24R28B2216CU**
300		Contact local Eaton representative					**V24R28B3316CU**

Notes

① Frames (dimensions and weights) subject to revision.

Additional voltage combinations are available. Contact your local Eaton sales office for assistance if the voltage you require is not included in this catalog.
For other ratings or catalog numbers not shown, or for special enclosure types (including stainless steel), refer to Eaton.
Frame drawings/dimensions information begins on **Page V2-T2-204**.

Three-Phase—Type DT-3 60 Hz DOE 2016 Energy-Efficient— Copper Windings

240 Delta Volts to 480Y/277 Volts

kVA	Temperature Rise °C	Frame	Wiring Diagram	Weight Lb (kg) ①	Type 3R WS Kit	Wallmount Bracket	Catalog Number
15	150	FR939	E0317A	250 (114)	WS57	WMB05	**V24M47T1516CU**
30		FR940		432 (196)	WS58	WMB05	**V24M47T3016CU**
45		FR940		482 (219)	WS58	WMB05	**V24M47T4516CU**
75		FR942		700 (318)	WS59	WMB04	**V24M47T7516CU**
112.5		FR943		1170 (531)	WS60	WMB04	**V24M47T1216CU**
150		FR943		1350 (613)	WS60	WMB04	**V24M47T4916CU**
225		Contact local Eaton representative					**V24R47T2216CU**
300							**V24E47T3316CU**
500							**V24E47T5516CU**
15	115	FR939	E0317A	253 (115)	WS57	WMB05	**V24M47F1516CU**
30		FR940		455 (206)	WS58	WMB05	**V24M47F3016CU**
45		FR940		495 (225)	WS58	WMB05	**V24M47F4516CU**
75		FR942		698 (317)	WS59	WMB04	**V24M47F7516CU**
112.5		FR943	E0351C	1335 (606)	WS60	WMB04	**V24R47F1216CU**
150		FR943		1493 (678)	WS60	WMB04	**V24R47F4916CU**
225		FR944		2186 (992)	WS61	—	**V24R47F2216CU**
300		Contact local Eaton representative					**V24R47F3316CU**
500							**V24E47F5516CU**
15	80	FR939	E0317A	251 (114)	WS57	WMB05	**V24M47B1516CU**
30		FR940		489 (222)	WS58	WMB05	**V24M47B3016CU**
45		FR942		700 (318)	WS59	WMB04	**V24M47B4516CU**
75		FR943		1204 (547)	WS60	WMB04	**V24M47B7516CU**
112.5		FR943	E0351C	1454 (660)	WS60	WMB04	**V24R47B1216CU**
150		FR944		1990 (903)	WS61	—	**V24R47B4916CU**
225		Contact local Eaton representative					**V24R47B2216CU**
300							**V24R47B3316CU**

Notes

① Frames (dimensions and weights) subject to revision.

Additional voltage combinations are available. Contact your local Eaton sales office for assistance if the voltage you require is not included in this catalog.
For other ratings or catalog numbers not shown, or for special enclosure types (including stainless steel), refer to Eaton.
Frame drawings/dimensions information begins on **Page V2-T2-204**.

Three-Phase—Type DT-3 60 Hz DOE 2016 Energy-Efficient— Copper Windings

480 Delta Volts to 208Y/120 Volts

kVA	Temperature Rise °C	Frame	Wiring Diagram	Weight Lb (kg) ①	Type 3R WS Kit	Wallmount Bracket	Catalog Number
15	150	FR939	280B	250 (114)	WS57	WMB05	**V48M28T1516CU**
30		FR940		415 (188)	WS58	WMB05	**V48M28T3016CU**
45		FR940		478 (217)	WS58	WMB05	**V48M28T4516CU**
75		FR942		676 (307)	WS59	WMB04	**V48M28T7516CU**
112.5		FR943		1263 (573)	WS60	WMB04	**V48M28T1216CU**
150		FR943		1410 (640)	WS60	WMB04	**V48M28T4916CU**
225		FR944		1883 (855)	WS61	—	**V48M28T2216CU**
300		FR945		2485 (1128)	WS62	—	**V48M28T3316CU**
500		Contact local Eaton representative					**V48M28T5516CU**
750							**V48D28T7716CU**
1000							**V48D28T1116CU**
15	115	FR939	280B	241 (109)	WS57	WMB05	**V48M28F1516CU**
30		FR940		433 (197)	WS58	WMB05	**V48M28F3016CU**
45		FR940		471 (214)	WS58	WMB05	**V48M28F4516CU**
75		FR942		665 (302)	WS59	WMB04	**V48M28F7516CU**
112.5		FR943		1271 (577)	WS60	WMB04	**V48M28F1216CU**
150		FR943		1422 (646)	WS60	WMB04	**V48M28F4916CU**
225		FR944		2082 (945)	WS61	—	**V48M28F2216CU**
300		FR945		2568 (1166)	WS62	—	**V48M28F3316CU**
500		Contact local Eaton representative					**V48M28F5516CU**
15	80	FR939	280B	239 (109)	WS57	WMB05	**V48M28B1516CU**
30		FR940		466 (212)	WS58	WMB05	**V48M28B3016CU**
45		FR942		667 (303)	WS58	WMB05	**V48M28B4516CU**
75		FR943		1147 (521)	WS59	WMB04	**V48M28B7516CU**
112.5		FR943		1385 (629)	WS60	WMB04	**V48M28B1216CU**
150		FR944		1895 (860)	WS60	WMB04	**V48M28B4916CU**
225		FR945		2385 (1083)	WS61	—	**V48M28B2216CU**
300		Contact local Eaton representative					**V48M28B3316CU**
500							**V48M28B5516CU**

Notes

① Frames (dimensions and weights) subject to revision.

Additional voltage combinations are available. Contact your local Eaton sales office for assistance if the voltage you require is not included in this catalog.
For other ratings or catalog numbers not shown, or for special enclosure types (including stainless steel), refer to Eaton.
Frame drawings/dimensions information begins on **Page V2-T2-204**.

Three-Phase—Type DT-3 60 Hz DOE 2016 Energy-Efficient— Copper Windings

480 Delta Volts to 240 Delta Volts with 120 Volt Lighting Tap on Phase B ①

kVA	Temperature Rise °C	Frame	Wiring Diagram	Weight Lb (kg) ②	Type 3R WS Kit	Wallmount Bracket	Catalog Number
15	150	FR939	282B	253 (115)	WS57	WMB05	**V48M22T1516CU**
30		FR940		485 (220)	WS58	WMB05	**V48M22T3016CU**
45		FR940		475 (216)	WS58	WMB05	**V48M22T4516CU**
75		FR942		691 (314)	WS59	WMB04	**V48M22T7516CU**
112.5		FR943		1215 (552)	WS60	WMB04	**V48M22T1216CU**
150		FR943		1366 (620)	WS60	WMB04	**V48M22T4916CU**
225		FR944		2000 (908)	WS61	—	**V48M22T2216CU**
300		FR945		2624 (1191)	WS62	—	**V48M22T3316CU**
500		Contact local Eaton representative					**V48M22T5516CU**
750							**V48D22T7716CU**
1000							**V48D22T1116CU**
15	115	FR939	282B	300 (136)	WS57	WMB05	**V48M22F1516CU**
30		FR940		485 (220)	WS58	WMB05	**V48M22F3016CU**
45		FR940		467 (212)	WS58	WMB05	**V48M22F4516CU**
75		FR942		665 (302)	WS59	WMB04	**V48M22F7516CU**
112.5		FR943		1200 (545)	WS60	WMB04	**V48M22F1216CU**
150		FR943		1366 (620)	WS60	WMB04	**V48M22F4916CU**
225		FR944		2400 (1090)	WS61	—	**V48M22F2216CU**
300		FR945		3000 (1362)	WS62	—	**V48M22F3316CU**
500		Contact local Eaton representative					**V48M22F5516CU**
15	80	FR939	282B	251 (114)	WS57	WMB05	**V48M22B1516CU**
30		FR940		489 (222)	WS58	WMB05	**V48M22B3016CU**
45		FR942		700 (318)	WS59	WMB04	**V48M22B4516CU**
75		FR943		1204 (547)	WS60	WMB04	**V48M22B7516CU**
112.5		FR943		1454 (660)	WS60	WMB04	**V48M22B1216CU**
150		FR944		1990 (903)	WS61	—	**V48M22B4916CU**
225		FR945		2504 (1137)	WS62	—	**V48M22B2216CU**
300		Contact local Eaton representative					**V48M22B3316CU**
500							**V48M22B5516CU**

Notes

① Lighting tap limited to 5% of nameplate full load capacity.

② Frames (dimensions and weights) subject to revision.

Additional voltage combinations are available. Contact your local Eaton sales office for assistance if the voltage you require is not included in this catalog.
For other ratings or catalog numbers not shown, or for special enclosure types (including stainless steel), refer to Eaton.
Frame drawings/dimensions information begins on **Page V2-T2-204**.

Three-Phase—Type DT-3 60 Hz DOE 2016 Energy-Efficient— Copper Windings

480 Delta Volts to 400Y/231 Volts

kVA	Temperature Rise °C	Frame	Wiring Diagram	Weight Lb (kg) ①	Type 3R WS Kit	Wallmount Bracket	Catalog Number
15	150	FR939	280B	260 (118)	WS57	WMB05	**V48M34T1516CU**
30		FR940		490 (222)	WS58	WMB05	**V48M34T3016CU**
45		FR940		495 (225)	WS58	WMB05	**V48M34T4516CU**
75		FR942		683 (310)	WS59	WMB04	**V48M34T7516CU**
112.5		FR943		1250 (568)	WS60	WMB04	**V48M34T1216CU**
150		FR943		1370 (622)	WS60	WMB04	**V48M34T4916CU**
225		FR944		2100 (953)	WS61	—	**V48M34T2216CU**
300		FR945		2650 (1203)	WS62	—	**V48M34T3316CU**
500		Contact local Eaton representative					**V48M34T5516CU**
15	115	FR939	280B	253 (115)	WS57	WMB05	**V48M34F1516CU**
30		FR940		455 (206)	WS58	WMB05	**V48M34F3016CU**
45		FR940		495 (225)	WS58	WMB05	**V48M34F4516CU**
75		FR942		698 (317)	WS59	WMB04	**V48M34F7516CU**
112.5		FR943		1335 (606)	WS60	WMB04	**V48M34F1216CU**
150		FR943		1493 (678)	WS60	WMB04	**V48M34F4916CU**
225		FR944		2186 (992)	WS61	—	**V48M34F2216CU**
300		FR945		2696 (1224)	WS62	—	**V48M34F3316CU**
500		Contact local Eaton representative					**V48M34F5516CU**
15	80	FR939	280B	251 (114)	WS57	WMB05	**V48M34B1516CU**
30		FR940		489 (222)	WS58	WMB05	**V48M34B3016CU**
45		FR942		700 (318)	WS59	WMB04	**V48M34B4516CU**
75		FR943		1204 (547)	WS60	WMB04	**V48M34B7516CU**
112.5		FR943		1454 (660)	WS60	WMB04	**V48M34B1216CU**
150		FR944		1990 (903)	WS61	—	**V48M34B4916CU**
225		FR945		2504 (1137)	WS62	—	**V48M34B2216CU**
300		Contact local Eaton representative					**V48M34B3316CU**

Notes

① Frames (dimensions and weights) subject to revision.

Additional voltage combinations are available. Contact your local Eaton sales office for assistance if the voltage you require is not included in this catalog.
For other ratings or catalog numbers not shown, or for special enclosure types (including stainless steel), refer to Eaton.
Frame drawings/dimensions information begins on **Page V2-T2-204**.

Three-Phase—Type DT-3 60 Hz DOE 2016 Energy-Efficient— Copper Windings

480 Delta Volts to 480Y/277 Volts

kVA	Temperature Rise °C	Frame	Wiring Diagram	Weight Lb (kg) ①	Type 3R WS Kit	Wallmount Bracket	Catalog Number
15	150	FR939	280B	260 (118)	WS57	WMB05	**V48M47T1516CU**
30		FR940		431 (196)	WS58	WMB05	**V48M47T3016CU**
45		FR940		457 (207)	WS58	WMB05	**V48M47T4516CU**
75		FR942		673 (306)	WS59	WMB04	**V48M47T7516CU**
112.5		FR943		1110 (504)	WS60	WMB04	**V48M47T1216CU**
150		FR943		1432 (650)	WS60	WMB04	**V48M47T4916CU**
225		FR944		2100 (953)	WS61	—	**V48M47T2216CU**
300		FR945		2650 (1203)	WS62	—	**V48M47T3316CU**
500		Contact local Eaton representative					**V48M47T5516CU**
15	115	FR939	280B	271 (123)	WS57	WMB05	**V48M47F1516CU**
30		FR940		431 (196)	WS58	WMB05	**V48M47F3016CU**
45		FR940		485 (220)	WS58	WMB05	**V48M47F4516CU**
75		FR942		730 (331)	WS59	WMB04	**V48M47F7516CU**
112.5		FR943		1146 (520)	WS60	WMB04	**V48M47F1216CU**
150		FR943		1432 (650)	WS60	WMB04	**V48M47F4916CU**
225		FR944		2150 (976)	WS61	—	**V48M47F2216CU**
300		FR945		2700 (1226)	WS62	—	**V48M47F3316CU**
500		Contact local Eaton representative					**V48M47F5516CU**
15	80	FR939	280B	254 (115)	WS57	WMB05	**V48M47B1516CU**
30		FR940		476 (216)	WS58	WMB05	**V48M47B3016CU**
45		FR942		670 (304)	WS58	WMB05	**V48M47B4516CU**
75		FR943		1110 (504)	WS59	WMB04	**V48M47B7516CU**
112.5		FR943		1385 (629)	WS60	WMB04	**V48M47B1216CU**
150		FR944		2100 (953)	WS60	WMB04	**V48M47B4916CU**
225		FR945		2650 (1203)	WS61	—	**V48M47B2216CU**
300		Contact local Eaton representative					**V48M47B3316CU**

Notes

① Frames (dimensions and weights) subject to revision.

Additional voltage combinations are available. Contact your local Eaton sales office for assistance if the voltage you require is not included in this catalog.
For other ratings or catalog numbers not shown, or for special enclosure types (including stainless steel), refer to Eaton.
Frame drawings/dimensions information begins on **Page V2-T2-204**.

Three-Phase—Type DT-3 60 Hz DOE 2016 Energy-Efficient—Copper Windings

600 Delta Volts to 208Y/120 Volts

kVA	Temperature Rise °C	Frame	Wiring Diagram	Weight Lb (kg) ①	Type 3R WS Kit	Wallmount Bracket	Catalog Number
15	150	FR939	280A	250 (114)	WS57	WMB05	**V60M28T1516CU**
30		FR940		441 (200)	WS58	WMB05	**V60M28T3016CU**
45		FR940		460 (209)	WS58	WMB05	**V60M28T4516CU**
75		FR942		712 (323)	WS59	WMB04	**V60M28T7516CU**
112.5		FR943		1260 (572)	WS60	WMB04	**V60M28T1216CU**
150		FR943		1420 (645)	WS60	WMB04	**V60M28T4916CU**
225		FR944		1890 (858)	WS61	—	**V60M28T2216CU**
300		FR945		2450 (1112)	WS62	—	**V60M28T3316CU**
500		Contact local Eaton representative					**V60M28T5516CU**
15	115	FR939	280A	253 (115)	WS57	WMB05	**V60M28F1516CU**
30		FR940		455 (206)	WS58	WMB05	**V60M28F3016CU**
45		FR940		495 (225)	WS58	WMB05	**V60M28F4516CU**
75		FR942		698 (317)	WS59	WMB04	**V60M28F7516CU**
112.5		FR943		1335 (606)	WS60	WMB04	**V60M28F1216CU**
150		FR943		1493 (678)	WS60	WMB04	**V60M28F4916CU**
225		FR944		2186 (992)	WS61	—	**V60M28F2216CU**
300		FR945		2696 (1224)	WS62	—	**V60M28F3316CU**
500		Contact local Eaton representative					**V60M28F5516CU**
15	80	FR939	280A	251 (114)	WS57	WMB05	**V60M28B1516CU**
30		FR940		489 (222)	WS58	WMB05	**V60M28B3016CU**
45		FR942		700 (318)	WS59	WMB04	**V60M28B4516CU**
75		FR943		1204 (547)	WS60	WMB04	**V60M28B7516CU**
112.5		FR943		1454 (660)	WS60	WMB04	**V60M28B1216CU**
150		FR944		1990 (903)	WS61	—	**V60M28B4916CU**
225		FR945		2504 (1137)	WS62	—	**V60M28B2216CU**
300		Contact local Eaton representative					**V60M28B3316CU**

Notes

① Frames (dimensions and weights) subject to revision.

Additional voltage combinations are available. Contact your local Eaton sales office for assistance if the voltage you require is not included in this catalog.
For other ratings or catalog numbers not shown, or for special enclosure types (including stainless steel), refer to Eaton.
Frame drawings/dimensions information begins on **Page V2-T2-204**.

Three-Phase—Type DT-3 60 Hz DOE 2016 Energy-Efficient—Copper Windings

600 Delta Volts to 480Y/277 Volts

kVA	Temperature Rise °C	Frame	Wiring Diagram	Weight Lb (kg) ①	Type 3R WS Kit	Wallmount Bracket	Catalog Number
15	150	FR939	280A	233 (106)	WS57	WMB05	**V60M47T1516CU**
30		FR940		431 (196)	WS58	WMB05	**V60M47T3016CU**
45		FR940		472 (214)	WS58	WMB05	**V60M47T4516CU**
75		FR942		673 (306)	WS59	WMB04	**V60M47T7516CU**
112.5		FR943		1110 (504)	WS60	WMB04	**V60M47T1216CU**
150		FR943		1450 (658)	WS60	WMB04	**V60M47T4916CU**
225		FR944		1913 (869)	WS61	—	**V60M47T2216CU**
300		FR945		2600 (1180)	WS62	—	**V60M47T3316CU**
500		Contact local Eaton representative					**V60M47T5516CU**
15	115	FR939	280A	253 (115)	WS57	WMB05	**V60M47F1516CU**
30		FR940		455 (206)	WS58	WMB05	**V60M47F3016CU**
45		FR940		495 (225)	WS58	WMB05	**V60M47F4516CU**
75		FR942		698 (317)	WS59	WMB04	**V60M47F7516CU**
112.5		FR943		1335 (606)	WS60	WMB04	**V60M47F1216CU**
150		FR943		1493 (678)	WS60	WMB04	**V60M47F4916CU**
225		FR944		2186 (992)	WS61	—	**V60M47F2216CU**
300		FR945		2696 (1224)	WS62	—	**V60M47F3316CU**
500		Contact local Eaton representative					**V60M47F5516CU**
15	80	FR939	280A	251 (114)	WS57	WMB05	**V60M47B1516CU**
30		FR940		489 (222)	WS58	WMB05	**V60M47B3016CU**
45		FR942		700 (318)	WS59	WMB04	**V60M47B4516CU**
75		FR943		1204 (547)	WS60	WMB04	**V60M47B7516CU**
112.5		FR943		1454 (660)	WS60	WMB04	**V60M47B1216CU**
150		FR944		1990 (903)	WS61	—	**V60M47B4916CU**
225		FR945		2504 (1137)	WS62	—	**V60M47B2216CU**
300		Contact local Eaton representative					**V60M47B3316CU**

Notes

① Frames (dimensions and weights) subject to revision.

Additional voltage combinations are available. Contact your local Eaton sales office for assistance if the voltage you require is not included in this catalog.
For other ratings or catalog numbers not shown, or for special enclosure types (including stainless steel), refer to Eaton.
Frame drawings/dimensions information begins on **Page V2-T2-204**.

Accessories

Please refer to Section 2.7 **Page V2-T2-167**.

2

Technical Data and Specifications

Frequency

Eaton standard low-voltage dry-type distribution transformers are designed for 60 Hz operation. Transformers required for other frequencies are available and must be specifically designed.

Overload Capability

Short-term overload is designed into transformers as required by ANSI. Low-voltage dry-type distribution transformers will deliver 200% nameplate load for one-half hour, 150% load for one hour and 125% load for four hours without being damaged, provided that a constant 50% load precedes and follows the overload. See ANSI C57.96-01.250 for additional limitations.

Continuous overload capacity is not deliberately designed into a transformer because the design objective is to be within the allowed winding temperature rise with nameplate loading.

Insulation System and Temperature Rise

Industry standards classify insulation systems and rise as shown below:

Insulation System Classification

Ambient	+ Winding Rise	+ Hot Spot	= Temp. Class
40°C	55°C	10°C	105°C
40°C	80°C	30°C	150°C
25°C	135°C	20°C	180°C
40°C	115°C	30°C	185°C
40°C	150°C	30°C	220°C

The design life of transformers having different insulation systems is the same—the lower-temperature systems are designed for the same life as the higher-temperature systems.

Enclosures

Eaton's ventilated transformers, Types DS-3 and DT-3, use a NEMA 2 rated (drip-proof) enclosure as standard, and are rated NEMA 3R with the addition of weathershields. Transformers manufactured in enclosures 939, 940, 942, 943, 944 and 945 are UL Listed to be installed indoors (without weathershields) with just 2 inches clearance on the sides and rear of the transformer.

Winding Terminations

Primary and secondary windings are terminated in the wiring compartment. Ventilated transformers have leads brought out to terminals that are pre-drilled to accept Cu/Al lugs. Aluminum-wound transformers have aluminum terminals; copper-wound models have copper terminals; aluminum and copper transformers include double neutral. **Lugs are not supplied with these transformers.** Eaton recommends external cables be rated 75°C for ventilated designs.

Series-Multiple Windings

Series-multiple windings consist of two similar coils in each winding that can be connected in series or parallel (multiple). Transformers with series-multiple windings are designated with an "x" or "/" between the voltage ratings, such as voltages of "120/240" or "240 x 480." If the series-multiple winding is designated by an "x," the winding can be connected only for a series or parallel.

With the "/" designation, a mid-point also becomes available in addition to the series or parallel connection. As an example, a 120 x 240 winding can be connected for either 120 (parallel) or 240 (series), but a 120/240 winding can be connected for 120 (parallel), or 240 (series), or 240 with a 120 mid-point.

For additional information, please refer to Section 2.7 **Page V2-T2-167**.

Sound Levels

All Eaton 600 volt class DOE 2016 low-voltage general-purpose dry-type distribution transformers are designed to meet NEMA ST-20 sound levels listed here. These are the sound levels measured in a soundproof environment. Actual sound levels measured at an installation will likely be higher (as much as 15 dB greater) due to electrical connections and environmental conditions. Lower sound levels are available and should be specified when the transformer is going to be installed in an area where sound may be a concern.

Average Sound Levels

NEMA ST-20 Average Sound Level, dB

Equivalent Winding kVA Range	Self-Cooled Ventilated (up to 1.2 kV) K-Factor 1, 4, 9	Self-Cooled Ventilated (up to 1.2 kV) K-Factor 13, 20	Encapsulated (up to 1.2 kV)
3.00 and below	40	40	45
3.01 to 9.00	40	40	45
9.01 to 15.00	45	45	50
15.01 to 30.00	45	45	50
30.01 to 50.00	45	48	50
50.01 to 75.00	50	53	55
75.01 to 112.50	50	53	55
112.51 to 150.00	50	53	55
150.01 to 225.00	55	58	57
225.01 to 300.00	55	58	57
300.01 to 500.00	60	63	59
500.01 to 700.00	62	65	61
700.01 to 1000.00	64	67	63
Greater than 1000	Consult factory	Consult factory	Consult factory

Note

For other ratings or catalog numbers not shown, or for special enclosure types (including stainless steel), refer to Eaton.

DOE 2016 Energy-Efficient K-Factor Rated Transformers



Contents

Description	*Page*
DOE 2016 Energy-Efficient K-Factor Rated Transformers	
Features, Benefits and Functions	**V2-T2-30**
Standards and Certifications	**V2-T2-30**
Product Selection	**V2-T2-31**
Accessories	**V2-T2-63**
Technical Data and Specifications	**V2-T2-63**

Product Description

A common industry term for the amount of harmonics produced by a given load is the K-factor. The larger the K-factor, the more harmonics are present. Linear loads, for example, have a K-factor of 1. Transformers may carry a K-factor rating to define the transformer's ability to withstand the additional heating generated by harmonic currents.

Applications

Eaton K-Factor transformers are specifically designed to withstand the harmful overheating effects caused by harmonics generated by nonlinear (non-sinusoidal) loads. These loads include computers, laser printers, copiers and other office equipment, as well as video monitors and other electronic equipment. Eaton K-Factor transformers are not simply over-sized transformers. The core and coils of our K-Factor transformers are specially designed to have reduced induction levels, which results in a reduction in stray losses. Oversized (200% rated) neutrals and electrostatic shielding are typical features found in our K-Factor transformers. Eaton K-Factor transformers are manufactured with the same high-quality construction features as our other ventilated transformer products, including NEMA 2 enclosures as standard.

Calculating the K-Factor

All nonlinear waveforms can be broken down mathematically into a fundamental frequency and its harmonics. IEEE C57.110 establishes a direct relationship between these harmonics and transformer heating. Underwriters Laboratories has established a similar relationship, the K-factor, which is derived by summing the square of the percentage current at a given harmonic level multiplied by the square of the harmonic order.

$$K = {}^{2}(I_h)^2(h)^2$$

Ih = Percent Current at Harmonic h

h = Harmonic Order, i.e., 3rd, 5th, 7th

For example, a load that is 90% of the fundamental, 30% of the third harmonic, and 20% of the fifth harmonic would yield $(.9)^2(1)^2 + (.3)^2(3)^2 + (.2)^2(5)^2$ or a K-factor of 2.62. This load would require an Eaton KT-4 transformer with a K-factor rating of 4.

Transformers that carry a K-factor rating define the transformer's ability to withstand a given harmonic load while operating within the transformer's insulation class.

An analysis of harmonic loads and a calculation of the K-factor must be made to properly apply transformers in any building or facility. Note that the calculated K-factor is not constant because nonlinear loads change throughout the day as equipment and lighting is turned off and on. These harmonic loads also change over the life of the building or facility as equipment is added or removed.

Harmonic Currents

Harmonic currents are found in nonlinear loads. These currents are generated by various types of equipment including switching mode power supplies that abruptly switch current on and off during each line cycle. Switching mode power supplies or diode-capacitor power supplies convert AC line voltage to low voltage DC. This process is accomplished by charging capacitors during each line cycle with narrow pluses of current that are time-coincident with line voltage peaks. Examples of this equipment include electronic ballasts for fluorescent lighting, personal computers, printers, fax machines, electronic and medical test equipment, uninterruptible power supplies, and solid-state motor drives.

Note: Nonlinear is synonymous with the term non-sinusoidal.

Harmonic Currents Found in Nonlinear Loads Cause Wave Shape Distortion and Create Added Stresses on Transformers

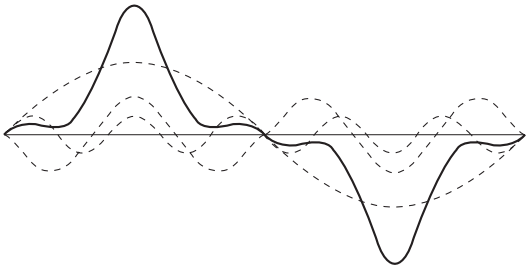

Features, Benefits and Functions

- 600 volt class standard
- Three-phase, 480 delta–208Y/120 volt standard
- Single-phase, 240 x 480 volt–120/240 volt standard
- 150°C rise standard, 80°C and 115°C available
- Three-phase neutrals sized for 200% of rated current
- The core and coil assembly is grounded to the transformer enclosure by means of a visible flexible copper ground strap. The copper ground strap is sized per the NEC to be a grounding conductor. Three-phase DOE 2016 efficient transformers are provided with a bonding ground bar attached to the bottom panel for compliance with NEC 450.10(A)
- Electrostatic shield

Note: Electrostatic shields do not reduce harmonic levels. However, because of the nature of switching mode loads, these shields do reduce transient noise in the system, which may affect sensitive computer loads.

- Aluminum windings (copper optional)
- Class 220°C insulation
- Reduced core flux density

Note: Reduced core flux prevents the core from saturation and overheating due to voltage distortions caused by harmonic currents.

- Indoor enclosures (weathershields optional, for outdoor applications)
- Coils designed to minimize stray losses
- K4, K13 standard
- K9, K20, K30 optional
- Low sound level (–3 dB, –5 dB) available as options

Standards and Certifications

- UL listed

Listed

Energy Verified

Industry Standards

All Eaton low-voltage dry-type distribution transformers are built and tested in accordance with applicable NEMA, ANSI and IEEE Standards. All 600 volt class transformers are UL listed unless otherwise noted.

Seismically Qualified

Eaton manufactured low-voltage dry-type distribution transformers are seismically qualified and exceed requirements of the Uniform Building Code (UBC), International Building Code (IBC) and California Code Title 24.

Catalog Number Selection

Please refer to Section 2.7 **Page V2-T2-162**.

Product Selection

Three-Phase— K-Factor Rated 60 Hz DOE 2016 Energy-Efficient— Aluminum Windings

K-4 480 Delta Volts to 208Y/120 Volts

kVA	Temperature Rise °C	Frame	Wiring Diagram	Weight Lb (kg) ①	Type 3R WS Kit	Wallmount Bracket	Catalog Number
15	150	FR940	283B	407 (185)	WS58	WMB05	**H48M28T1516**
30		FR940		437 (198)	WS58	WMB05	**H48M28T3016**
45		FR940		439 (199)	WS58	WMB05	**H48M28T4516**
75		FR942		599 (272)	WS59	WMB04	**H48M28T7516**
112.5		FR943		987 (448)	WS60	WMB04	**H48M28T1216**
150		FR944		1637 (743)	WS61	—	**H48M28T4916**
225		FR944		1642 (745)	WS61	—	**H48M28T2216**
300		FR945		2394 (1087)	WS62	—	**H48M28T3316**
500		Contact local Eaton representative					**H48M28T5516**
15	115	FR940	283B	402 (183)	WS58	WMB05	**H48M28F1516**
30		FR940		415 (188)	WS58	WMB05	**H48M28F3016**
45		FR942		619 (281)	WS59	WMB04	**H48M28F4516**
75		FR943		984 (447)	WS60	WMB04	**H48M28F7516**
112.5		FR943		1236 (561)	WS60	WMB04	**H48M28F1216**
150		FR944		1662 (755)	WS61	—	**H48M28F4916**
225		FR945		2353 (1068)	WS62	—	**H48M28F2216**
300		FR945		2198 (998)	WS62	—	**H48M28F3316**
500		Contact local Eaton representative					**H48M28F5516**
15	80	FR940	283B	415 (188)	WS58	WMB05	**H48M28B1516**
30		FR940		437 (198)	WS58	WMB05	**H48M28B3016**
45		FR942		619 (281)	WS58	WMB05	**H48M28B4516**
75		FR943		1027 (466)	WS59	WMB04	**H48M28B7516**
112.5		FR944		1643 (746)	WS60	WMB04	**H48M28B1216**
150		FR944		1710 (776)	WS60	—	**H48M28B4916**
225		FR924		2680 (1217)	WS40	—	**H48M28B2216**
300		Contact local Eaton representative					**H48M28B3316**

Notes

① Frames (dimensions and weights) subject to revision.

Additional voltage combinations are available. Contact your local Eaton sales office for assistance if the voltage you require is not included in this catalog.
For other ratings or catalog numbers not shown, or for special enclosure types (including stainless steel), refer to Eaton.
Frame drawings/dimensions information begins on **Page V2-T2-204**.

Three-Phase— K-Factor Rated 60 Hz DOE 2016 Energy-Efficient— Aluminum Windings

K-4 480 Delta Volts to 480Y/277 Volts

kVA	Temperature Rise °C	Frame	Wiring Diagram	Weight Lb (kg) ①	Type 3R WS Kit	Wallmount Bracket	Catalog Number
15	150	FR940	283B	427 (194)	WS58	WMB05	**H48M47T1516**
30		FR940		459 (208)	WS58	WMB05	**H48M47T3016**
45		FR940		461 (209)	WS58	WMB05	**H48M47T4516**
75		FR942		629 (286)	WS59	WMB04	**H48M47T7516**
112.5		FR943		1036 (471)	WS60	WMB04	**H48M47T1216**
150		FR944		1719 (780)	WS61	—	**H48M47T4916**
225		FR944		1724 (783)	WS61	—	**H48M47T2216**
300		FR945		2514 (1141)	WS62	—	**H48M47T3316**
500		Contact local Eaton representative					**H48M47T5516**
15	115	FR940	283B	422 (192)	WS58	WMB05	**H48M47F1516**
30		FR940		436 (198)	WS58	WMB05	**H48M47F3016**
45		FR942		650 (295)	WS59	WMB04	**H48M47F4516**
75		FR943		1033 (469)	WS60	WMB04	**H48M47F7516**
112.5		FR943		1298 (589)	WS60	WMB04	**H48M47F1216**
150		FR944		1745 (792)	WS61	—	**H48M47F4916**
225		FR945		2471 (1122)	WS62	—	**H48M47F2216**
300		FR945		2308 (1048)	WS62	—	**H48M47F3316**
500		Contact local Eaton representative					**H48M47F5516**
15	80	FR939	283B	267 (121)	WS57	WMB05	**H48M47B1516**
30		FR940		459 (208)	WS58	WMB05	**H48M47B3016**
45		FR942		650 (295)	WS59	WMB04	**H48M47B4516**
75		FR943		1078 (490)	WS60	WMB04	**H48M47B7516**
112.5		FR944		1725 (783)	WS61	—	**H48M47B1216**
150		FR944		1796 (815)	WS61	—	**H48M47B4916**
225		FR924		2814 (1278)	WS40	—	**H48M47B2216**
300		Contact local Eaton representative					**H48M47B3316**

Notes

① Frames (dimensions and weights) subject to revision.

Additional voltage combinations are available. Contact your local Eaton sales office for assistance if the voltage you require is not included in this catalog.
For other ratings or catalog numbers not shown, or for special enclosure types (including stainless steel), refer to Eaton.
Frame drawings/dimensions information begins on **Page V2-T2-204**.

Three-Phase— K-Factor Rated 60 Hz DOE 2016 Energy-Efficient— Aluminum Windings

K-4 600 Delta Volts to 208Y/120 Volts

kVA	Temperature Rise °C	Frame	Wiring Diagram	Weight Lbs (kg) ①	Type 3R WS Kit	Wallmount Bracket	Catalog Number
15	150	FR940	283E	427 (194)	WS58	WMB05	**H60M28T1516**
30		FR940		459 (208)	WS58	WMB05	**H60M28T3016**
45		FR940		461 (209)	WS58	WMB05	**H60M28T4516**
75		FR942		629 (286)	WS59	WMB04	**H60M28T7516**
112.5		FR943		1036 (471)	WS60	WMB04	**H60M28T1216**
150		FR944		1719 (780)	WS61	—	**H60M28T4916**
225		FR944		1724 (783)	WS61	—	**H60M28T2216**
300		FR945		2514 (1141)	WS62	—	**H60M28T3316**
500		Contact local Eaton representative					**H60M28T5516**
15	115	FR940	283E	422 (192)	WS58	WMB05	**H60M28F1516**
30		FR940		436 (198)	WS58	WMB05	**H60M28F3016**
45		FR942		650 (295)	WS59	WMB04	**H60M28F4516**
75		FR943		1033 (469)	WS60	WMB04	**H60M28F7516**
112.5		FR943		1298 (589)	WS60	WMB04	**H60M28F1216**
150		FR944		1745 (792)	WS61	—	**H60M28F4916**
225		FR945		2471 (1122)	WS62	—	**H60M28F2216**
300		FR945		2308 (1048)	WS62	—	**H60M28F3316**
500		Contact local Eaton representative					**H60M28F5516**
15	80	FR939	283E	267 (121)	WS57	WMB05	**H60M28B1516**
30		FR940		459 (208)	WS58	WMB05	**H60M28B3016**
45		FR942		650 (295)	WS59	WMB04	**H60M28B4516**
75		FR943		1078 (490)	WS60	WMB04	**H60M28B7516**
112.5		FR944		1725 (783)	WS61	—	**H60M28B1216**
150		FR944		1796 (815)	WS61	—	**H60M28B4916**
225		FR924		2814 (1278)	WS40	—	**H60M28B2216**
300		Contact local Eaton representative					**H60M28B3316**

Notes

① Frames (dimensions and weights) subject to revision.

Additional voltage combinations are available. Contact your local Eaton sales office for assistance if the voltage you require is not included in this catalog.
For other ratings or catalog numbers not shown, or for special enclosure types (including stainless steel), refer to Eaton.
Frame drawings/dimensions information begins on **Page V2-T2-204**.

Three-Phase— K-Factor Rated 60 Hz DOE 2016 Energy-Efficient— Aluminum Windings

K-4 600 Delta Volts to 480Y/277 Volts

kVA	Temperature Rise °C	Frame	Wiring Diagram	Weight Lb (kg) ①	Type 3R WS Kit	Wallmount Bracket	Catalog Number
15	150	FR940	283E	427 (194)	WS58	WMB05	**H60M47T1516**
30		FR940		459 (208)	WS58	WMB05	**H60M47T3016**
45		FR940		461 (209)	WS58	WMB05	**H60M47T4516**
75		FR942		629 (286)	WS59	WMB04	**H60M47T7516**
112.5		FR943		1036 (471)	WS60	WMB04	**H60M47T1216**
150		FR944		1719 (780)	WS61	—	**H60M47T4916**
225		FR944		1724 (783)	WS61	—	**H60M47T2216**
300		FR945		2514 (1141)	WS62	—	**H60M47T3316**
500		Contact local Eaton representative					**H60M47T5516**
15	115	FR940	283E	422 (192)	WS58	WMB05	**H60M47F1516**
30		FR940		436 (198)	WS58	WMB05	**H60M47F3016**
45		FR942		650 (295)	WS59	WMB04	**H60M47F4516**
75		FR943		1033 (469)	WS60	WMB04	**H60M47F7516**
112.5		FR943		1298 (589)	WS60	WMB04	**H60M47F1216**
150		FR944		1745 (792)	WS61	—	**H60M47F4916**
225		FR945		2471 (1122)	WS62	—	**H60M47F2216**
300		FR945		2308 (1048)	WS62	—	**H60M47F3316**
500		Contact local Eaton representative					**H60M47F5516**
15	80	FR939	283E	267 (121)	WS57	WMB05	**H60M47B1516**
30		FR940		459 (208)	WS58	WMB05	**H60M47B3016**
45		FR942		650 (295)	WS59	WMB04	**H60M47B4516**
75		FR943		1078 (490)	WS60	WMB04	**H60M47B7516**
112.5		FR944		1725 (783)	WS61	—	**H60M47B1216**
150		FR944		1796 (815)	WS61	—	**H60M47B4916**
225		FR924		2814 (1278)	WS40	—	**H60M47B2216**
300		Contact local Eaton representative					**H60M47B3316**

Notes

① Frames (dimensions and weights) subject to revision.

Additional voltage combinations are available. Contact your local Eaton sales office for assistance if the voltage you require is not included in this catalog.
For other ratings or catalog numbers not shown, or for special enclosure types (including stainless steel), refer to Eaton.
Frame drawings/dimensions information begins on **Page V2-T2-204**.

Three-Phase— K-Factor Rated 60 Hz DOE 2016 Energy-Efficient— Copper Windings

K-4 480 Delta Volts to 208Y/120 Volts

kVA	Temperature Rise °C	Frame	Wiring Diagram	Weight Lb (kg) ①	Type 3R WS Kit	Wallmount Bracket	Catalog Number
15	150	FR940	283B	418 (190)	WS58	WMB05	**H48M28T1516CU**
30		FR940		458 (208)	WS58	WMB05	**H48M28T3016CU**
45		FR940		480 (218)	WS58	WMB05	**H48M28T4516CU**
75		FR943		1274 (578)	WS60	WMB04	**H48M28T7516CU**
112.5		FR943		1818 (825)	WS60	WMB04	**H48M28T1216CU**
150		FR944		2105 (956)	WS61	—	**H48M28T4916CU**
225		FR945		2674 (1214)	WS62	—	**H48M28T2216CU**
300		FR945		2737 (1243)	WS62	—	**H48M28T3316CU**
500		Contact local Eaton representative					**H48M28T5516CU**
15	115	FR940	283B	414 (188)	WS58	WMB05	**H48M28F1516CU**
30		FR940		417 (189)	—	—	**H48M28F3016CU**
45		FR942		684 (311)	WS59	WMB04	**H48M28F4516CU**
75		FR943		1083 (492)	WS60	WMB04	**H48M28F7516CU**
112.5		FR943		1394 (633)	WS60	WMB04	**H48M28F1216CU**
150		FR944		2103 (955)	WS61	—	**H48M28F4916CU**
225		FR945		2150 (976)	—	—	**H48M28F2216CU**
300		Contact local Eaton representative					**H48M28F3316CU**
500							**H48M28F5516CU**
15	80	FR940	283B	440 (200)	WS58	WMB05	**H48M28B1516CU**
30		FR940		482 (219)	WS58	WMB05	**H48M28B3016CU**
45		FR942		669 (304)	WS59	WMB04	**H48M28B4516CU**
75		FR943		1210 (549)	WS60	WMB04	**H48M28B7516CU**
112.5		FR943		1287 (584)	WS60	WMB04	**H48M28B1216CU**
150		FR944		2138 (971)	WS61	—	**H48M28B4916CU**
225		FR945		2727 (1238)	—	—	**H48M28B2216CU**
300		Contact local Eaton representative					**H48M28B3316CU**

Notes

① Frames (dimensions and weights) subject to revision.

Additional voltage combinations are available. Contact your local Eaton sales office for assistance if the voltage you require is not included in this catalog.
For other ratings or catalog numbers not shown, or for special enclosure types (including stainless steel), refer to Eaton.
Frame drawings/dimensions information begins on **Page V2-T2-204**.

Three-Phase— K-Factor Rated 60 Hz DOE 2016 Energy-Efficient— Copper Windings

K-4 480 Delta Volts to 480Y/277 Volts

kVA	Temperature Rise °C	Frame	Wiring Diagram	Weight Lb (kg) ①	Type 3R WS Kit	Wallmount Bracket	Catalog Number
15	150	FR940	283B	439 (199)	WS58	WMB05	**H48M47T1516CU**
30		FR940		481 (218)	WS58	WMB05	**H48M47T3016CU**
45		FR940		504 (229)	WS58	WMB05	**H48M47T4516CU**
75		FR943		1338 (607)	WS60	WMB04	**H48M47T7516CU**
112.5		FR943		1909 (867)	WS60	WMB04	**H48M47T1216CU**
150		FR944		2210 (1003)	WS61	—	**H48M47T4916CU**
225		FR945		2808 (1275)	WS62	—	**H48M47T2216CU**
300		FR945		2874 (1305)	WS62	—	**H48M47T3316CU**
500		Contact local Eaton representative					**H48M47T5516CU**
15	115	FR940	283B	435 (197)	WS58	WMB05	**H48M47F1516CU**
30		FR940		438 (199)	WS58	WMB05	**H48M47F3016CU**
45		FR942		718 (326)	WS59	WMB04	**H48M47F4516CU**
75		FR943		1137 (516)	WS60	WMB04	**H48M47F7516CU**
112.5		FR943		1464 (665)	WS60	WMB04	**H48M47F1216CU**
150		FR944		2208 (1003)	WS61	—	**H48M47F4916CU**
225		FR945		1764 (801)	WS62	—	**H48M47F2216CU**
300		Contact local Eaton representative					**H48M47F3316CU**
500							**H48M47F5516CU**
15	80	FR940	283B	462 (208)	WS58	WMB05	**H48M47B1516CU**
30		FR940		506 (230)	WS58	WMB05	**H48M47B3016CU**
45		FR942		702 (319)	WS59	WMB04	**H48M47B4516CU**
75		FR943		1271 (577)	WS60	WMB04	**H48M47B7516CU**
112.5		FR943		1351 (614)	WS60	WMB04	**H48M47B1216CU**
150		FR944		2245 (1019)	WS61	—	**H48M47B4916CU**
225		FR945		2863 (1300)	WS62	—	**H48M47B2216CU**
300		Contact local Eaton representative					**H48M47B3316CU**

Notes

① Frames (dimensions and weights) subject to revision.

Additional voltage combinations are available. Contact your local Eaton sales office for assistance if the voltage you require is not included in this catalog.
For other ratings or catalog numbers not shown, or for special enclosure types (including stainless steel), refer to Eaton.
Frame drawings/dimensions information begins on **Page V2-T2-204**.

Three-Phase— K-Factor Rated 60 Hz DOE 2016 Energy-Efficient— Copper Windings

K-4 600 Delta Volts to 208Y/120 Volts

kVA	Temperature Rise °C	Frame	Wiring Diagram	Weight Lb (kg) ①	Type 3R WS Kit	Wallmount Bracket	Catalog Number
15	150	FR940	283E	439 (199)	WS58	WMB05	**H60M28T1516CU**
30		FR940		481 (218)	WS58	WMB05	**H60M28T3016CU**
45		FR940		504 (229)	WS58	WMB05	**H60M28T4516CU**
75		FR943		1338 (607)	WS60	WMB04	**H60M28T7516CU**
112.5		FR943		1909 (867)	WS60	WMB04	**H60M28T1216CU**
150		FR944		2210 (1003)	WS61	—	**H60M28T4916CU**
225		FR945		2808 (1275)	WS62	—	**H60M28T2216CU**
300		FR945		2874 (1305)	WS62	—	**H60M28T3316CU**
500		Contact local Eaton representative					**H60M28T5516CU**
15	115	FR940	283E	435 (197)	WS58	WMB05	**H60M28F1516CU**
30		FR940		438 (199)	WS58	WMB05	**H60M28F3016CU**
45		FR942		718 (326)	WS59	WMB04	**H60M28F4516CU**
75		FR943		1137 (516)	WS60	WMB04	**H60M28F7516CU**
112.5		FR943		1464 (665)	WS60	WMB04	**H60M28F1216CU**
150		FR944		2208 (1003)	WS61	—	**H60M28F4916CU**
225		FR945		1764 (801)	WS62	—	**H60M28F2216CU**
300		Contact local Eaton representative					**H60M28F3316CU**
500							**H60M28F5516CU**
15	80	FR940	283E	462 (208)	WS58	WMB05	**H60M28B1516CU**
30		FR940		506 (230)	WS58	WMB05	**H60M28B3016CU**
45		FR942		702 (319)	WS59	WMB04	**H60M28B4516CU**
75		FR943		1271 (577)	WS60	WMB04	**H60M28B7516CU**
112.5		FR943		1351 (614)	WS60	WMB04	**H60M28B1216CU**
150		FR944		2245 (1019)	WS61	—	**H60M28B4916CU**
225		FR945		2863 (1300)	WS62	—	**H60M28B2216CU**
300		Contact local Eaton representative					**H60M28B3316CU**

Notes

① Frames (dimensions and weights) subject to revision.

Additional voltage combinations are available. Contact your local Eaton sales office for assistance if the voltage you require is not included in this catalog.
For other ratings or catalog numbers not shown, or for special enclosure types (including stainless steel), refer to Eaton.
Frame drawings/dimensions information begins on **Page V2-T2-204**.

Three-Phase— K-Factor Rated 60 Hz DOE 2016 Energy-Efficient— Copper Windings

K-4 600 Delta Volts to 480Y/277 Volts

kVA	Temperature Rise °C	Frame	Wiring Diagram	Weight Lb (kg) ①	Type 3R WS Kit	Wallmount Bracket	Catalog Number
15	150	FR940	283E	439 (199)	WS58	WMB05	**H60M47T1516CU**
30		FR940		481 (218)	WS58	WMB05	**H60M47T3016CU**
45		FR940		504 (229)	WS58	WMB05	**H60M47T4516CU**
75		FR943		1338 (607)	WS60	WMB04	**H60M47T7516CU**
112.5		FR943		1909 (867)	WS60	WMB04	**H60M47T1216CU**
150		FR944		2210 (1003)	WS61	—	**H60M47T4916CU**
225		FR945		2808 (1275)	WS62	—	**H60M47T2216CU**
300		FR945		2874 (1305)	WS62	—	**H60M47T3316CU**
500		Contact local Eaton representative					**H60M47T5516CU**
15	115	FR940	283E	435 (197)	WS58	WMB05	**H60M47F1516CU**
30		FR940		438 (199)	WS58	WMB05	**H60M47F3016CU**
45		FR942		718 (326)	WS59	WMB04	**H60M47F4516CU**
75		FR943		1137 (516)	WS60	WMB04	**H60M47F7516CU**
112.5		FR943		1464 (665)	WS60	WMB04	**H60M47F1216CU**
150		FR944		2208 (1003)	WS61	—	**H60M47F4916CU**
225		FR945		1764 (801)	WS62	—	**H60M47F2216CU**
300		Contact local Eaton representative					**H60M47F3316CU**
500							**H60M47F5516CU**
15	80	FR940	283E	462 (208)	WS58	WMB05	**H60M47B1516CU**
30		FR940		506 (230)	WS58	WMB05	**H60M47B3016CU**
45		FR942		702 (319)	WS59	WMB04	**H60M47B4516CU**
75		FR943		1271 (577)	WS60	WMB04	**H60M47B7516CU**
112.5		FR943		1351 (614)	WS60	WMB04	**H60M47B1216CU**
150		FR944		2245 (1019)	WS61	—	**H60M47B4916CU**
225		FR945		2863 (1300)	WS62	—	**H60M47B2216CU**
300		Contact local Eaton representative					**H60M47B3316CU**

Notes

① Frames (dimensions and weights) subject to revision.

Additional voltage combinations are available. Contact your local Eaton sales office for assistance if the voltage you require is not included in this catalog.
For other ratings or catalog numbers not shown, or for special enclosure types (including stainless steel), refer to Eaton.
Frame drawings/dimensions information begins on **Page V2-T2-204**.

Three-Phase— K-Factor Rated 60 Hz DOE 2016 Energy-Efficient— Aluminum Windings

K-9 480 Delta Volts to 208Y/120 Volts

kVA	Temperature Rise °C	Frame	Wiring Diagram	Weight Lb (kg) ①	Type 3R WS Kit	Wallmount Bracket	Catalog Number
15	150	FR940	283B	406 (184)	WS58	WMB05	**B48M28T1516**
30		FR940		416 (189)	WS58	WMB05	**B48M28T3016**
45		FR942		594 (270)	WS59	WMB04	**B48M28T4516**
75		FR943		1012 (459)	WS60	WMB04	**B48M28T7516**
112.5		FR943		1297 (589)	WS60	WMB04	**B48M28T1216**
150		FR944		1652 (750)	WS61	—	**B48M28T4916**
225		FR945		2379 (1080)	WS62	—	**B48M28T2216**
300		FR924		1910 (867)	WS40	—	**B48M28T3316**
500		Contact local Eaton representative					**B48M28T5516**
15	115	FR940	283B	412 (187)	WS58	WMB05	**B48M28F1516**
30		FR940		437 (198)	WS58	WMB05	**B48M28F3016**
45		FR942		619 (281)	WS59	WMB04	**B48M28F4516**
75		FR943		977 (444)	WS60	WMB04	**B48M28F7516**
112.5		FR944		1760 (799)	WS61	—	**B48M28F1216**
150		FR944		1682 (764)	WS61	—	**B48M28F4916**
225		FR924		1927 (875)	WS40	—	**B48M28F2216**
300		FR924		2894 (1314)	WS40	—	**B48M28F3316**
500		Contact local Eaton representative					**B48M28F5516**
15	80	FR940	283B	420 (191)	WS58	WMB05	**B48M28B1516**
30		FR940		438 (199)	WS58	WMB05	**B48M28B3016**
45		FR943		927 (421)	WS60	WMB04	**B48M28B4516**
75		FR943		1098 (498)	WS60	WMB04	**B48M28B7516**
112.5		FR944		1939 (880)	WS61	—	**B48M28B1216**
150		FR945		2400 (1090)	WS62	—	**B48M28B4916**
225		FR924		2816 (1278)	WS40	—	**B48M28B2216**
300		Contact local Eaton representative					**B48M28B3316**

Notes

① Frames (dimensions and weights) subject to revision.

Additional voltage combinations are available. Contact your local Eaton sales office for assistance if the voltage you require is not included in this catalog.
For other ratings or catalog numbers not shown, or for special enclosure types (including stainless steel), refer to Eaton.
Frame drawings/dimensions information begins on **Page V2-T2-204**.

Three-Phase— K-Factor Rated 60 Hz DOE 2016 Energy-Efficient— Aluminum Windings

K-9 480 Delta Volts to 480Y/277 Volts

kVA	Temperature Rise °C	Frame	Wiring Diagram	Weight Lb (kg) ①	Type 3R WS Kit	Wallmount Bracket	Catalog Number
15	150	FR940	283B	426 (194)	WS58	WMB05	**B48M47T1516**
30		FR940		437 (198)	WS58	WMB05	**B48M47T3016**
45		FR942		624 (283)	WS59	WMB04	**B48M47T4516**
75		FR943		1063 (482)	WS60	WMB04	**B48M47T7516**
112.5		FR943		1362 (618)	WS60	WMB04	**B48M47T1216**
150		FR944		1496 (679)	WS61	—	**B48M47T4916**
225		FR945		2458 (1116)	WS62	—	**B48M47T2216**
300		FR924		2014 (914)	WS40	—	**B48M47T3316**
500		Contact local Eaton representative					**B48M47T5516**
15	115	FR940	283B	433 (196)	WS58	WMB05	**B48M47F1516**
30		FR940		459 (208)	WS58	WMB05	**B48M47F3016**
45		FR942		650 (295)	WS59	WMB04	**B48M47F4516**
75		FR943		1026 (466)	WS60	WMB04	**B48M47F7516**
112.5		FR944		1848 (839)	WS61	—	**B48M47F1216**
150		FR944		1766 (802)	WS61	—	**B48M47F4916**
225		FR924		2023 (919)	WS40	—	**B48M47F2216**
300		FR924		3039 (1380)	WS40	—	**B48M47F3316**
500		Contact local Eaton representative					**B48M47F5516**
15	80	FR940	283B	420 (191)	WS58	WMB05	**B48M47B1516**
30		FR940		457 (207)	WS58	WMB05	**B48M47B3016**
45		FR943		973 (442)	WS60	WMB04	**B48M47B4516**
75		FR943		1153 (523)	WS60	WMB04	**B48M47B7516**
112.5		FR944		1939 (880)	WS61	—	**B48M47B1216**
150		FR945		2537 (1152)	WS62	—	**B48M47B4916**
225		FR924		2957 (1342)	WS40	—	**B48M47B2216**
300		Contact local Eaton representative					**B48M47B3316**

Notes

① Frames (dimensions and weights) subject to revision.

Additional voltage combinations are available. Contact your local Eaton sales office for assistance if the voltage you require is not included in this catalog.
For other ratings or catalog numbers not shown, or for special enclosure types (including stainless steel), refer to Eaton.
Frame drawings/dimensions information begins on **Page V2-T2-204**.

Three-Phase— K-Factor Rated 60 Hz DOE 2016 Energy-Efficient— Aluminum Windings

K-9 600 Delta Volts to 208Y/120 Volts

kVA	Temperature Rise °C	Frame	Wiring Diagram	Weight Lb (kg) ①	Type 3R WS Kit	Wallmount Bracket	Catalog Number
15	150	FR940	283E	426 (194)	WS58	WMB05	**B60M28T1516**
30		FR940		437 (198)	WS58	WMB05	**B60M28T3016**
45		FR942		624 (283)	WS59	WMB04	**B60M28T4516**
75		FR943		1063 (482)	WS60	WMB04	**B60M28T7516**
112.5		FR943		1362 (618)	WS60	WMB04	**B60M28T1216**
150		FR944		1496 (679)	WS61	—	**B60M28T4916**
225		FR945		2458 (1116)	WS62	—	**B60M28T2216**
300		FR924		2014 (914)	WS40	—	**B60M28T3316**
500		Contact local Eaton representative					**B60M28T5516**
15	115	FR940	283E	433 (196)	WS58	WMB05	**B60M28F1516**
30		FR940		459 (208)	WS58	WMB05	**B60M28F3016**
45		FR942		650 (295)	WS59	WMB04	**B60M28F4516**
75		FR943		1026 (466)	WS60	WMB04	**B60M28F7516**
112.5		FR944		1848 (839)	WS61	—	**B60M28F1216**
150		FR944		1766 (802)	WS61	—	**B60M28F4916**
225		FR924		2023 (919)	WS40	—	**B60M28F2216**
300		FR924		3039 (1380)	WS40	—	**B60M28F3316**
500		Contact local Eaton representative					**B60M28F5516**
15	80	FR940	283E	420 (191)	WS58	WMB05	**B60M28B1516**
30		FR940		457 (207)	WS58	WMB05	**B60M28B3016**
45		FR943		973 (442)	WS60	WMB04	**B60M28B4516**
75		FR943		1153 (523)	WS60	WMB04	**B60M28B7516**
112.5		FR944		1939 (880)	WS61	—	**B60M28B1216**
150		FR945		2537 (1152)	WS62	—	**B60M28B4916**
225		FR924		2957 (1342)	WS40	—	**B60M28B2216**
300		Contact local Eaton representative					**B60M28B3316**

Notes

① Frames (dimensions and weights) subject to revision.

Additional voltage combinations are available. Contact your local Eaton sales office for assistance if the voltage you require is not included in this catalog.
For other ratings or catalog numbers not shown, or for special enclosure types (including stainless steel), refer to Eaton.
Frame drawings/dimensions information begins on **Page V2-T2-204**.

Three-Phase— K-Factor Rated 60 Hz DOE 2016 Energy-Efficient— Aluminum Windings

K-9 600 Delta Volts to 480Y/277 Volts

kVA	Temperature Rise °C	Frame	Wiring Diagram	Weight Lb (kg) ①	Type 3R WS Kit	Wallmount Bracket	Catalog Number
15	150	FR940	283E	426 (194)	WS58	WMB05	**B60M47T1516**
30		FR940		437 (198)	WS58	WMB05	**B60M47T3016**
45		FR942		624 (283)	WS59	WMB04	**B60M47T4516**
75		FR943		1063 (482)	WS60	WMB04	**B60M47T7516**
112.5		FR943		1362 (618)	WS60	WMB04	**B60M47T1216**
150		FR944		1496 (679)	WS61	—	**B60M47T4916**
225		FR945		2458 (1116)	WS62	—	**B60M47T2216**
300		FR924		2014 (914)	WS40	—	**B60M47T3316**
500		Contact local Eaton representative					**B60M47T5516**
15	115	FR940	283E	433 (196)	WS58	WMB05	**B60M47F1516**
30		FR940		459 (208)	WS58	WMB05	**B60M47F3016**
45		FR942		650 (295)	WS59	WMB04	**B60M47F4516**
75		FR943		1026 (466)	WS60	WMB04	**B60M47F7516**
112.5		FR944		1848 (839)	WS61	—	**B60M47F1216**
150		FR944		1766 (802)	WS61	—	**B60M47F4916**
225		FR924		2023 (919)	WS40	—	**B60M47F2216**
300		FR924		3039 (1380)	WS40	—	**B60M47F3316**
500		Contact local Eaton representative					**B60M47F5516**
15	80	FR940	283E	420 (191)	WS58	WMB05	**B60M47B1516**
30		FR940		457 (207)	WS58	WMB05	**B60M47B3016**
45		FR943		973 (442)	WS60	WMB04	**B60M47B4516**
75		FR943		1153 (523)	WS60	WMB04	**B60M47B7516**
112.5		FR944		1939 (880)	WS61	—	**B60M47B1216**
150		FR945		2537 (1152)	WS62	—	**B60M47B4916**
225		FR924		2957 (1342)	WS40	—	**B60M47B2216**
300		Contact local Eaton representative					**B60M47B3316**

Notes

① Frames (dimensions and weights) subject to revision.

Additional voltage combinations are available. Contact your local Eaton sales office for assistance if the voltage you require is not included in this catalog.
For other ratings or catalog numbers not shown, or for special enclosure types (including stainless steel), refer to Eaton.
Frame drawings/dimensions information begins on **Page V2-T2-204**.

Three-Phase— K-Factor Rated 60 Hz DOE 2016 Energy-Efficient— Copper Windings

K-9 480 Delta Volts to 208Y/120 Volts

kVA	Temperature Rise °C	Frame	Wiring Diagram	Weight Lb (kg) ①	Type 3R WS Kit	Wallmount Bracket	Catalog Number
15	150	FR940	283B	430 (195)	WS58	WMB05	**B48M28T1516CU**
30		FR940		505 (229)	WS58	WMB05	**B48M28T3016CU**
45		FR942		699 (317)	WS59	WMB04	**B48M28T4516CU**
75		FR943		1103 (501)	WS60	WMB04	**B48M28T7516CU**
112.5		FR943		1424 (646)	WS60	WMB04	**B48M28T1216CU**
150		FR944		2132 (968)	WS61	—	**B48M28T4916CU**
225		FR945		2628 (1193)	WS62	—	**B48M28T2216CU**
300		FR924		3400 (1544)	WS40	—	**B48M28T3316CU**
500		Contact local Eaton representative					**B48M28T5516CU**
15	115	FR940	283B	398 (181)	WS58	WMB05	**B48M28F1516CU**
30		FR940		478 (217)	WS58	WMB05	**B48M28F3016CU**
45		FR942		658 (299)	WS59	WMB04	**B48M28F4516CU**
75		FR943		1115 (506)	WS60	WMB04	**B48M28F7516CU**
112.5		FR944		2150 (976)	WS61	—	**B48M28F1216CU**
150		FR944		2013 (914)	WS61	—	**B48M28F4916CU**
225		FR945		3043 (1382)	WS62	—	**B48M28F2216CU**
300		Contact local Eaton representative					**B48M28F3316CU**
500							**B48M28F5516CU**
15	80	FR940	283B	434 (197)	WS58	WMB05	**B48M28B1516CU**
30		FR940		507 (230)	WS58	WMB05	**B48M28B3016CU**
45		FR942		703 (319)	WS59	WMB04	**B48M28B4516CU**
75		FR943		1112 (505)	WS60	WMB04	**B48M28B7516CU**
112.5		FR944		1927 (875)	WS61	—	**B48M28B1216CU**
150		FR945		2013 (914)	WS61	—	**B48M28B4916CU**
225		FR945		3345 (1519)	WS62	—	**B48M28B2216CU**
300		Contact local Eaton representative					**B48M28B3316CU**

Notes

① Frames (dimensions and weights) subject to revision.

Additional voltage combinations are available. Contact your local Eaton sales office for assistance if the voltage you require is not included in this catalog.
For other ratings or catalog numbers not shown, or for special enclosure types (including stainless steel), refer to Eaton.
Frame drawings/dimensions information begins on **Page V2-T2-204**.

Three-Phase— K-Factor Rated 60 Hz DOE 2016 Energy-Efficient— Copper Windings

K-9 480 Delta Volts to 480Y/277 Volts

kVA	Temperature Rise °C	Frame	Wiring Diagram	Weight Lb (kg) ①	Type 3R WS Kit	Wallmount Bracket	Catalog Number
15	150	FR940	283B	452 (205)	WS58	WMB05	**B48M47T1516CU**
30		FR940		504 (229)	WS58	WMB05	**B48M47T3016CU**
45		FR942		691 (314)	WS59	WMB04	**B48M47T4516CU**
75		FR943		1171 (532)	WS60	WMB04	**B48M47T7516CU**
112.5		FR943		1495 (679)	WS60	WMB04	**B48M47T1216CU**
150		FR944		2239 (1016)	WS61	—	**B48M47T4916CU**
225		FR945		2759 (1253)	WS62	—	**B48M47T2216CU**
300		FR924		3400 (1544)	WS40	—	**B48M47T3316CU**
500		Contact local Eaton representative					**B48M47T5516CU**
15	115	FR940	283B	418 (190)	WS58	WMB05	**B48M47F1516CU**
30		FR940		502 (228)	WS58	WMB05	**B48M47F3016CU**
45		FR942		691 (314)	WS59	WMB04	**B48M47F4516CU**
75		FR943		1171 (532)	WS60	WMB04	**B48M47F7516CU**
112.5		FR944		2258 (1025)	WS61	—	**B48M47F1216CU**
150		FR944		2114 (960)	WS61	—	**B48M47F4916CU**
225		FR945		3195 (1451)	WS62	—	**B48M47F2216CU**
300		Contact local Eaton representative					**B48M28F3316CU**
500							**B48M28F5516CU**
15	80	FR940	283B	456 (207)	WS58	WMB05	**B48M47B1516CU**
30		FR940		532 (242)	WS58	WMB05	**B48M47B3016CU**
45		FR942		738 (335)	WS59	WMB04	**B48M47B4516CU**
75		FR943		1168 (530)	WS60	WMB04	**B48M47B7516CU**
112.5		FR944		2023 (919)	WS61	—	**B48M47B1216CU**
150		FR945		3195 (1451)	WS61	—	**B48M47B4916CU**
225		FR945		3512 (1595)	WS62	—	**B48M47B2216CU**
300		Contact local Eaton representative					**B48M28B3316CU**

Notes

① Frames (dimensions and weights) subject to revision.

Additional voltage combinations are available. Contact your local Eaton sales office for assistance if the voltage you require is not included in this catalog.
For other ratings or catalog numbers not shown, or for special enclosure types (including stainless steel), refer to Eaton.
Frame drawings/dimensions information begins on **Page V2-T2-204**.

Three-Phase— K-Factor Rated 60 Hz DOE 2016 Energy-Efficient— Copper Windings

K-9 600 Delta Volts to 208Y/120 Volts

kVA	Temperature Rise °C	Frame	Wiring Diagram	Weight Lb (kg) ①	Type 3R WS Kit	Wallmount Bracket	Catalog Number
15	150	FR940	283E	452 (205)	WS58	WMB05	**B60M28T1516CU**
30		FR940		504 (229)	WS58	WMB05	**B60M28T3016CU**
45		FR942		691 (314)	WS59	WMB04	**B60M28T4516CU**
75		FR943		1171 (532)	WS60	WMB04	**B60M28T7516CU**
112.5		FR943		1495 (679)	WS60	WMB04	**B60M28T1216CU**
150		FR944		2239 (1016)	WS61	—	**B60M28T4916CU**
225		FR945		2759 (1253)	WS62	—	**B60M28T2216CU**
300		FR924		3400 (1544)	WS40	—	**B60M28T3316CU**
500		Contact local Eaton representative					**B60M28T5516CU**
15	115	FR940	283E	418 (190)	WS58	WMB05	**B60M28F1516CU**
30		FR940		502 (228)	WS58	WMB05	**B60M28F3016CU**
45		FR942		691 (314)	WS59	WMB04	**B60M28F4516CU**
75		FR943		1171 (532)	WS60	WMB04	**B60M28F7516CU**
112.5		FR944		2258 (1025)	WS61	—	**B60M28F1216CU**
150		FR944		2114 (960)	WS61	—	**B60M28F4916CU**
225		FR945		3195 (1451)	WS62	—	**B60M28F2216CU**
300		Contact local Eaton representative					**B60M28F3316CU**
500							**B60M28F5516CU**
15	80	FR940	283E	456 (207)	WS58	WMB05	**B60M28B1516CU**
30		FR940		532 (242)	WS58	WMB05	**B60M28B3016CU**
45		FR942		738 (335)	WS59	WMB04	**B60M28B4516CU**
75		FR943		1168 (530)	WS60	WMB04	**B60M28B7516CU**
112.5		FR944		2023 (919)	WS61	—	**B60M28B1216CU**
150		FR945		3195 (1451)	WS61	—	**B60M28B4916CU**
225		FR945		3512 (1595)	WS62	—	**B60M28B2216CU**
300		Contact local Eaton representative					**B60M28B3316CU**

Notes

① Frames (dimensions and weights) subject to revision.

Additional voltage combinations are available. Contact your local Eaton sales office for assistance if the voltage you require is not included in this catalog.
For other ratings or catalog numbers not shown, or for special enclosure types (including stainless steel), refer to Eaton.
Frame drawings/dimensions information begins on **Page V2-T2-204**.

Three-Phase— K-Factor Rated 60 Hz DOE 2016 Energy-Efficient— Copper Windings

K-9 600 Delta Volts to 480Y/277 Volts

kVA	Temperature Rise °C	Frame	Wiring Diagram	Weight Lb (kg) ①	Type 3R WS Kit	Wallmount Bracket	Catalog Number
15	150	FR940	283E	452 (205)	WS58	WMB05	**B60M47T1516CU**
30		FR940		504 (229)	WS58	WMB05	**B60M47T3016CU**
45		FR942		691 (314)	WS59	WMB04	**B60M47T4516CU**
75		FR943		1171 (532)	WS60	WMB04	**B60M47T7516CU**
112.5		FR943		1495 (679)	WS60	WMB04	**B60M47T1216CU**
150		FR944		2239 (1016)	WS61	—	**B60M47T4916CU**
225		FR945		2759 (1253)	WS62	—	**B60M47T2216CU**
300		FR924		3400 (1544)	WS40	—	**B60M47T3316CU**
500		Contact local Eaton representative					**B60M47T5516CU**
15	115	FR940	283E	418 (190)	WS58	WMB05	**B60M47F1516CU**
30		FR940		502 (228)	WS58	WMB05	**B60M47F3016CU**
45		FR942		691 (314)	WS59	WMB04	**B60M47F4516CU**
75		FR943		1171 (532)	WS60	WMB04	**B60M47F7516CU**
112.5		FR944		2258 (1025)	WS61	—	**B60M47F1216CU**
150		FR944		2114 (960)	WS61	—	**B60M47F4916CU**
225		FR945		3195 (1451)	WS62	—	**B60M47F2216CU**
300		Contact local Eaton representative					**B60M47F3316CU**
500							**B60M47F5516CU**
15	80	FR940	283E	456 (207)	WS58	WMB05	**B60M47B1516CU**
30		FR940		532 (242)	WS58	WMB05	**B60M47B3016CU**
45		FR942		738 (335)	WS59	WMB04	**B60M47B4516CU**
75		FR943		1168 (530)	WS60	WMB04	**B60M47B7516CU**
112.5		FR944		2023 (919)	WS61	—	**B60M47B1216CU**
150		FR945		3195 (1451)	WS61	—	**B60M47B4916CU**
225		FR945		3512 (1595)	WS62	—	**B60M47B2216CU**
300		Contact local Eaton representative					**B60M47B5516CU**

Notes

① Frames (dimensions and weights) subject to revision.

Additional voltage combinations are available. Contact your local Eaton sales office for assistance if the voltage you require is not included in this catalog.
For other ratings or catalog numbers not shown, or for special enclosure types (including stainless steel), refer to Eaton.
Frame drawings/dimensions information begins on **Page V2-T2-204**.

Three-Phase— K-Factor Rated 60 Hz DOE 2016 Energy-Efficient— Aluminum Windings

K-13 480 Delta Volts to 208Y/120 Volts

kVA	Temperature Rise °C	Frame	Wiring Diagram	Weight Lb (kg) ①	Type 3R WS Kit	Wallmount Bracket	Catalog Number
15	150	FR940	283B	406 (184)	WS58	WMB05	**N48M28T1516**
30		FR940		416 (189)	WS58	WMB05	**N48M28T3016**
45		FR942		594 (270)	WS59	WMB04	**N48M28T4516**
75		FR943		1012 (459)	WS60	WMB04	**N48M28T7516**
112.5		FR943		1297 (589)	WS60	WMB04	**N48M28T1216**
150		FR944		1425 (647)	WS61	—	**N48M28T4916**
225		FR945		2341 (1063)	WS62	—	**N48M28T2216**
300		Contact local Eaton representative					**N48M28T3316**
500							**N48M28T5516**
15	115	FR940	283B	412 (187)	WS58	WMB05	**N48M28F1516**
30		FR940		437 (198)	WS58	WMB05	**N48M28F3016**
45		FR942		619 (281)	WS59	WMB04	**N48M28F4516**
75		FR943		977 (444)	WS60	WMB04	**N48M28F7516**
112.5		FR944		1760 (799)	WS61	—	**N48M28F1216**
150		FR944		1682 (764)	WS61	—	**N48M28F4916**
225		FR924		1927 (875)	WS40	—	**N48M28F2216**
300		Contact local Eaton representative					**N48M28F3316**
500							**N48M28F5516**
15	80	FR940	283B	420 (191)	WS58	WMB05	**N48M28B1516**
30		FR940		438 (199)	WS58	WMB05	**N48M28B3016**
45		FR943		927 (421)	WS60	WMB04	**N48M28B4516**
75		FR943		1098 (498)	WS60	WMB04	**N48M28B7516**
112.5		FR944		1939 (880)	WS61	—	**N48M28B1216**
150		FR945		2400 (1090)	WS62	—	**N48M28B4916**
225		Contact local Eaton representative					**N48M28B2216**
300							**N48M28B3316**

Notes

① Frames (dimensions and weights) subject to revision.

Additional voltage combinations are available. Contact your local Eaton sales office for assistance if the voltage you require is not included in this catalog.
For other ratings or catalog numbers not shown, or for special enclosure types (including stainless steel), refer to Eaton.
Frame drawings/dimensions information begins on **Page V2-T2-204**.

Three-Phase— K-Factor Rated 60 Hz DOE 2016 Energy-Efficient— Aluminum Windings

K-13 480 Delta Volts to 480Y/277 Volts

kVA	Temperature Rise °C	Frame	Wiring Diagram	Weight Lb (kg) ①	Type 3R WS Kit	Wallmount Bracket	Catalog Number
15	150	FR940	283B	426 (194)	WS58	WMB05	**N48M47T1516**
30		FR940		437 (198)	WS58	WMB05	**N48M47T3016**
45		FR942		624 (283)	WS59	WMB04	**N48M47T4516**
75		FR943		1063 (482)	WS60	WMB04	**N48M47T7516**
112.5		FR943		1362 (618)	WS60	WMB04	**N48M47T1216**
150		FR944		1496 (679)	WS61	—	**N48M47T4916**
225		FR945		2458 (1116)	WS62	—	**N48M47T2216**
300		Contact local Eaton representative					**N48M47T3316**
500							**N48M47T5516**
15	115	FR940	283B	433 (196)	WS58	WMB05	**N48M47F1516**
30		FR940		459 (208)	WS58	WMB05	**N48M47F3016**
45		FR942		650 (295)	WS59	WMB04	**N48M47F4516**
75		FR943		1026 (466)	WS60	WMB04	**N48M47F7516**
112.5		FR944		1848 (839)	WS61	—	**N48M47F1216**
150		FR944		1766 (802)	WS61	—	**N48M47F4916**
225		FR924		2023 (919)	WS40	—	**N48M47F2216**
300		Contact local Eaton representative					**N48M47F3316**
500							**N48M47F5516**
15	80	FR940	283B	420 (191)	WS58	WMB05	**N48M47B1516**
30		FR940		457 (207)	WS58	WMB05	**N48M47B3016**
45		FR943		973 (442)	WS60	WMB04	**N48M47B4516**
75		FR943		1153 (523)	WS60	WMB04	**N48M47B7516**
112.5		FR944		1939 (880)	WS61	—	**N48M47B1216**
150		FR945		2537 (1152)	WS62	—	**N48M47B4916**
225		Contact local Eaton representative					**N48M47B2216**
300							**N48M47B3316**

Notes

① Frames (dimensions and weights) subject to revision.

Additional voltage combinations are available. Contact your local Eaton sales office for assistance if the voltage you require is not included in this catalog.
For other ratings or catalog numbers not shown, or for special enclosure types (including stainless steel), refer to Eaton.
Frame drawings/dimensions information begins on **Page V2-T2-204**.

Three-Phase— K-Factor Rated 60 Hz DOE 2016 Energy-Efficient— Aluminum Windings

K-13 600 Delta Volts to 208Y/120 Volts

kVA	Temperature Rise °C	Frame	Wiring Diagram	Weight Lb (kg) ①	Type 3R WS Kit	Wallmount Bracket	Catalog Number
15	150	FR940	283E	426 (194)	WS58	WMB05	**N60M28T1516**
30		FR940		437 (198)	WS58	WMB05	**N60M28T3016**
45		FR942		624 (283)	WS59	WMB04	**N60M28T4516**
75		FR943		1063 (482)	WS60	WMB04	**N60M28T7516**
112.5		FR943		1362 (618)	WS60	WMB04	**N60M28T1216**
150		FR944		1496 (679)	WS61	—	**N60M28T4916**
225		FR945		2458 (1116)	WS62	—	**N60M28T2216**
300		Contact local Eaton representative					**N60M28T3316**
500							**N60M28T5516**
15	115	FR940	283E	433 (196)	WS58	WMB05	**N60M28F1516**
30		FR940		459 (208)	WS58	WMB05	**N60M28F3016**
45		FR942		650 (295)	WS59	WMB04	**N60M28F4516**
75		FR943		1026 (466)	WS60	WMB04	**N60M28F7516**
112.5		FR944		1848 (839)	WS61	—	**N60M28F1216**
150		FR944		1766 (802)	WS61	—	**N60M28F4916**
225		FR924		2023 (919)	WS40	—	**N60M28F2216**
300		Contact local Eaton representative					**N60M28F3316**
500							**N60M28F5516**
15	80	FR940	283E	420 (191)	WS58	WMB05	**N60M28B1516**
30		FR940		457 (207)	WS58	WMB05	**N60M28B3016**
45		FR943		973 (442)	WS60	WMB04	**N60M28B4516**
75		FR943		1153 (523)	WS60	WMB04	**N60M28B7516**
112.5		FR944		1939 (880)	WS61	—	**N60M28B1216**
150		FR945		2537 (1152)	WS62	—	**N60M28B4916**
225		Contact local Eaton representative					**N60M28B2216**
300							**N60M28B3316**

Notes

① Frames (dimensions and weights) subject to revision.

Additional voltage combinations are available. Contact your local Eaton sales office for assistance if the voltage you require is not included in this catalog.
For other ratings or catalog numbers not shown, or for special enclosure types (including stainless steel), refer to Eaton.
Frame drawings/dimensions information begins on **Page V2-T2-204**.

Three-Phase— K-Factor Rated 60 Hz DOE 2016 Energy-Efficient— Aluminum Windings

K-13 600 Delta Volts to 480Y/277 Volts

kVA	Temperature Rise °C	Frame	Wiring Diagram	Weight Lb (kg) ①	Type 3R WS Kit	Wallmount Bracket	Catalog Number
15	150	FR940	283E	426 (194)	WS58	WMB05	**N60M47T1516**
30		FR940		437 (198)	WS58	WMB05	**N60M47T3016**
45		FR942		624 (283)	WS59	WMB04	**N60M47T4516**
75		FR943		1063 (482)	WS60	WMB04	**N60M47T7516**
112.5		FR943		1362 (618)	WS60	WMB04	**N60M47T1216**
150		FR944		1496 (679)	WS61	—	**N60M47T4916**
225		FR945		2458 (1116)	WS62	—	**N60M47T2216**
300		Contact local Eaton representative					**N60M47T3316**
500							**N60M47T5516**
15	115	FR940	283E	433 (196)	WS58	WMB05	**N60M47F1516**
30		FR940		459 (208)	WS58	WMB05	**N60M47F3016**
45		FR942		650 (295)	WS59	WMB04	**N60M47F4516**
75		FR943		1026 (466)	WS60	WMB04	**N60M47F7516**
112.5		FR944		1848 (839)	WS61	—	**N60M47F1216**
150		FR944		1766 (802)	WS61	—	**N60M47F4916**
225		Contact local Eaton representative					**N60M47F2216**
300							**N60M47F3316**
500							**N60M47F5516**
15	80	FR940	283E	420 (191)	WS58	WMB05	**N60M47B1516**
30		FR940		457 (207)	WS58	WMB05	**N60M47B3016**
45		FR943		973 (442)	WS60	WMB04	**N60M47B4516**
75		FR943		1153 (523)	WS60	WMB04	**N60M47B7516**
112.5		FR944		1939 (880)	WS61	—	**N60M47B1216**
150		FR945		2537 (1152)	WS62	—	**N60M47B4916**
225		Contact local Eaton representative					**N60M47B2216**
300							**N60M47B3316**

Notes

① Frames (dimensions and weights) subject to revision.

Additional voltage combinations are available. Contact your local Eaton sales office for assistance if the voltage you require is not included in this catalog.
For other ratings or catalog numbers not shown, or for special enclosure types (including stainless steel), refer to Eaton.
Frame drawings/dimensions information begins on **Page V2-T2-204**.

Three-Phase— K-Factor Rated 60 Hz DOE 2016 Energy-Efficient— Copper Windings

K-13 480 Delta Volts to 208Y/120 Volts

kVA	Temperature Rise °C	Frame	Wiring Diagram	Weight Lb (kg) ①	Type 3R WS Kit	Wallmount Bracket	Catalog Number
15	150	FR940	283B	430 (195)	WS58	WMB05	**N48M28T1516CU**
30		FR940		480 (218)	WS58	WMB05	**N48M28T3016CU**
45		FR942		658 (299)	WS59	WMB04	**N48M28T4516CU**
75		FR943		1115 (506)	WS60	WMB04	**N48M28T7516CU**
112.5		FR943		1424 (646)	WS60	WMB04	**N48M28T1216CU**
150		FR944		2132 (968)	WS61	—	**N48M28T4916CU**
225		FR945		2628 (1193)	WS62	—	**N48M28T2216CU**
300		Contact local Eaton representative					**N48M28T3316CU**
500							**N48M28T5516CU**
15	115	FR940	283B	398 (181)	WS58	WMB05	**N48M28F1516CU**
30		FR940		478 (217)	WS58	WMB05	**N48M28F3016CU**
45		FR942		658 (299)	WS59	WMB04	**N48M28F4516CU**
75		FR943		1115 (506)	WS60	WMB04	**N48M28F7516CU**
112.5		FR944		2150 (976)	WS61	—	**N48M28F1216CU**
150		FR944		2013 (914)	WS61	—	**N48M28F4916CU**
225		FR945		3043 (1382)	WS62	—	**N48M28F2216CU**
300		Contact local Eaton representative					**N48M28F3316CU**
500							**N48M28F5516CU**
15	80	FR940	283B	434 (197)	WS58	WMB05	**N48M28B1516CU**
30		FR940		507 (230)	WS58	WMB05	**N48M28B3016CU**
45		FR942		703 (319)	WS59	WMB04	**N48M28B4516CU**
75		FR943		1112 (505)	WS60	WMB04	**N48M28B7516CU**
112.5		FR944		1927 (875)	WS61	—	**N48M28B1216CU**
150		FR945		3043 (1382)		—	**N48M28B4916CU**
225		Contact local Eaton representative					**N48M28B2216CU**
300							**N48M28B3316CU**

Notes

① Frames (dimensions and weights) subject to revision.

Additional voltage combinations are available. Contact your local Eaton sales office for assistance if the voltage you require is not included in this catalog.
For other ratings or catalog numbers not shown, or for special enclosure types (including stainless steel), refer to Eaton.
Frame drawings/dimensions information begins on **Page V2-T2-204**.

Three-Phase— K-Factor Rated 60 Hz DOE 2016 Energy-Efficient— Copper Windings

K-13 480 Delta Volts to 480Y/277 Volts

kVA	Temperature Rise °C	Frame	Wiring Diagram	Weight Lb (kg) ①	Type 3R WS Kit	Wallmount Bracket	Catalog Number
15	150	FR940	283B	452 (205)	WS58	WMB05	**N48M47T1516CU**
30		FR940		504 (229)	WS58	WMB05	**N48M47T3016CU**
45		FR942		691 (314)	WS59	WMB04	**N48M47T4516CU**
75		FR943		1171 (532)	WS60	WMB04	**N48M47T7516CU**
112.5		FR943		1495 (679)	WS60	WMB04	**N48M47T1216CU**
150		FR944		2239 (1016)	WS61	—	**N48M47T4916CU**
225		FR945		2759 (1253)	WS62	—	**N48M47T2216CU**
300		Contact local Eaton representative					**N48M47T3316CU**
500							**N48M47T5516CU**
15	115	FR940	283B	418 (190)	WS58	WMB05	**N48M47F1516CU**
30		FR940		502 (228)	WS58	WMB05	**N48M47F3016CU**
45		FR942		691 (314)	WS59	WMB04	**N48M47F4516CU**
75		FR943		1171 (532)	WS60	WMB04	**N48M47F7516CU**
112.5		FR944		2258 (1025)	WS61	—	**N48M47F1216CU**
150		FR944		2114 (960)	WS61	—	**N48M47F4916CU**
225		Contact local Eaton representative					**N48M47F2216CU**
300							**N48M47F3316CU**
500							**N48M47F5516CU**
15	80	FR940	283B	456 (207)	WS58	WMB05	**N48M47B1516CU**
30		FR940		532 (242)	WS58	WMB05	**N48M47B3016CU**
45		FR942		738 (335)	WS59	WMB04	**N48M47B4516CU**
75		FR943		1168 (530)	WS60	WMB04	**N48M47B7516CU**
112.5		FR944		2023 (919)	WS61	—	**N48M47B1216CU**
150		FR945		3195 (1451)	WS61	—	**N48M47B4916CU**
225		Contact local Eaton representative					**N48M47B2216CU**
300							**N48M47B3316CU**

Notes

① Frames (dimensions and weights) subject to revision.

Additional voltage combinations are available. Contact your local Eaton sales office for assistance if the voltage you require is not included in this catalog.
For other ratings or catalog numbers not shown, or for special enclosure types (including stainless steel), refer to Eaton.
Frame drawings/dimensions information begins on **Page V2-T2-204**.

Three-Phase— K-Factor Rated 60 Hz DOE 2016 Energy-Efficient— Copper Windings

K-13 600 Delta Volts to 208Y/120 Volts

kVA	Temperature Rise °C	Frame	Wiring Diagram	Weight Lb (kg) ①	Type 3R WS Kit	Wallmount Bracket	Catalog Number
15	150	FR940	283E	452 (205)	WS58	WMB05	**N60M28T1516CU**
30		FR940		504 (229)	WS58	WMB05	**N60M28T3016CU**
45		FR942		691 (314)	WS59	WMB04	**N60M28T4516CU**
75		FR943		1171 (532)	WS60	WMB04	**N60M28T7516CU**
112.5		FR943		1495 (679)	WS60	WMB04	**N60M28T1216CU**
150		FR945		2239 (1016)	WS61	—	**N60M28T4916CU**
225		FR945		2759 (1253)	WS62	—	**N60M28T2216CU**
300		FR924		3400 (1544)	WS40	—	**N60M28T3316CU**
500		Contact local Eaton representative					**N60M28T5516CU**
15	115	FR940	283E	418 (190)	WS58	WMB05	**N60M28F1516CU**
30		FR940		502 (228)	WS58	WMB05	**N60M28F3016CU**
45		FR942		691 (314)	WS59	WMB04	**N60M28F4516CU**
75		FR943		1171 (532)	WS60	WMB04	**N60M28F7516CU**
112.5		FR944		2258 (1025)	WS61	—	**N60M28F1216CU**
150		FR944		2114 (960)	WS61	—	**N60M28F4916CU**
225		FR945		3195 (1451)	WS62	—	**N60M28F2216CU**
300		Contact local Eaton representative					**N60M28F3316CU**
500							**N60M28F5516CU**
15	80	FR940	283E	456 (207)	WS58	WMB05	**N60M28B1516CU**
30		FR940		532 (242)	WS58	WMB05	**N60M28B3016CU**
45		FR942		738 (335)	WS59	WMB04	**N60M28B4516CU**
75		FR943		1168 (530)	WS60	WMB04	**N60M28B7516CU**
112.5		FR944		2023 (919)	WS61	—	**N60M28B1216CU**
150		FR945		3195 (1451)	WS61	—	**N60M28B4916CU**
225		FR945		3512 (1595)	WS62	—	**N60M28B2216CU**
300		Contact local Eaton representative					**N60M28B3316CU**

Notes

① Frames (dimensions and weights) subject to revision.

Additional voltage combinations are available. Contact your local Eaton sales office for assistance if the voltage you require is not included in this catalog.
For other ratings or catalog numbers not shown, or for special enclosure types (including stainless steel), refer to Eaton.
Frame drawings/dimensions information begins on **Page V2-T2-204**.

Three-Phase— K-Factor Rated 60 Hz DOE 2016 Energy-Efficient— Copper Windings

K-13 600 Delta Volts to 480Y/277 Volts

kVA	Temperature Rise °C	Frame	Wiring Diagram	Weight Lb (kg) ①	Type 3R WS Kit	Wallmount Bracket	Catalog Number
15	150	FR940	283E	452 (205)	WS58	WMB05	**N60M47T1516CU**
30		FR940		504 (229)	WS58	WMB05	**N60M47T3016CU**
45		FR942		691 (314)	WS59	WMB04	**N60M47T4516CU**
75		FR943		1171 (532)	WS60	WMB04	**N60M47T7516CU**
112.5		FR943		1495 (679)	WS60	WMB04	**N60M47T1216CU**
150		FR945		2239 (1016)	WS61	—	**N60M47T4916CU**
225		FR945		2759 (1253)	WS62	—	**N60M47T2216CU**
300		Contact local Eaton representative					**N60M47T3316CU**
500							**N60M47T5516CU**
15	115	FR940	283E	418 (190)	WS58	WMB05	**N60M47F1516CU**
30		FR940		502 (228)	WS58	WMB05	**N60M47F3016CU**
45		FR942		691 (314)	WS59	WMB04	**N60M47F4516CU**
75		FR943		1171 (532)	WS60	WMB04	**N60M47F7516CU**
112.5		FR944		2258 (1025)	WS61	—	**N60M47F1216CU**
150		FR944		2114 (960)	WS61	—	**N60M47F4916CU**
225		FR945		3195 (1451)	WS62	—	**N60M47F2216CU**
300		Contact local Eaton representative					**N60M47F3316CU**
500							**N60M47F5516CU**
15	80	FR940	283E	456 (207)	WS58	WMB05	**N60M47B1516CU**
30		FR940		532 (242)	WS58	WMB05	**N60M47B3016CU**
45		FR942		738 (335)	WS59	WMB04	**N60M47B4516CU**
75		FR943		1168 (530)	WS60	WMB04	**N60M47B7516CU**
112.5		FR944		2023 (919)	WS61	—	**N60M47B1216CU**
150		FR945		3195 (1451)	WS61	—	**N60M47B4916CU**
225		FR945		3512 (1595)	WS62	—	**N60M47B2216CU**
300		Contact local Eaton representative					**N60M47B3316CU**

Notes

① Frames (dimensions and weights) subject to revision.

Additional voltage combinations are available. Contact your local Eaton sales office for assistance if the voltage you require is not included in this catalog.
For other ratings or catalog numbers not shown, or for special enclosure types (including stainless steel), refer to Eaton.
Frame drawings/dimensions information begins on **Page V2-T2-204**.

Three-Phase— K-Factor Rated 60 Hz DOE 2016 Energy-Efficient— Aluminum Windings

K-20 480 Delta Volts to 208Y/120 Volts

kVA	Temperature Rise °C	Frame	Wiring Diagram	Weight Lb (kg) ①	Type 3R WS Kit	Wallmount Bracket	Catalog Number
15	150	Contact local Eaton representative					**G48M28T1516**
30							**G48M28T3016**
45							**G48M28T4516**
75							**G48M28T7516**
112.5							**G48M28T1216**
150							**G48M28T4916**
225							**G48M28T2216**
300							**G48M28T3316**
500							**G48M28T5516**
15	115	Contact local Eaton representative					**G48M28F1516**
30							**G48M28F3016**
45							**G48M28F4516**
75							**G48M28F7516**
112.5							**G48M28F1216**
150							**G48M28F4916**
225							**G48M28F2216**
300							**G48M28F3316**
500							**G48M28F5516**
15	80	Contact local Eaton representative					**G48M28B1516**
30							**G48M28B3016**
45							**G48M28B4516**
75							**G48M28B7516**
112.5							**G48M28B1216**
150							**G48M28B4916**
225							**G48M28B2216**
300							**G48M28B3316**

Notes

① Frames (dimensions and weights) subject to revision.

Additional voltage combinations are available. Contact your local Eaton sales office for assistance if the voltage you require is not included in this catalog.
For other ratings or catalog numbers not shown, or for special enclosure types (including stainless steel), refer to Eaton.
Frame drawings/dimensions information begins on **Page V2-T2-204**.

Three-Phase— K-Factor Rated 60 Hz DOE 2016 Energy-Efficient— Aluminum Windings

K-20 480 Delta Volts to 480Y/277 Volts

kVA	Temperature Rise °C	Frame	Wiring Diagram	Weight Lb (kg) ①	Type 3R WS Kit	Wallmount Bracket	Catalog Number
15	150	Contact local Eaton representative					**G48M47T1516**
30							**G48M47T3016**
45							**G48M47T4516**
75							**G48M47T7516**
112.5							**G48M47T1216**
150							**G48M47T4916**
225							**G48M47T2216**
300							**G48M47T3316**
500							**G48M47T5516**
15	115	Contact local Eaton representative					**G48M47F1516**
30							**G48M47F3016**
45							**G48M47F4516**
75							**G48M47F7516**
112.5							**G48M47F1216**
150							**G48M47F4916**
225							**G48M47F2216**
300							**G48M47F3316**
500							**G48M47F5516**
15	80	Contact local Eaton representative					**G48M47B1516**
30							**G48M47B3016**
45							**G48M47B4516**
75							**G48M47B7516**
112.5							**G48M47B1216**
150							**G48M47B4916**
225							**G48M47B2216**
300							**G48M47B3316**

Notes

① Frames (dimensions and weights) subject to revision.

Additional voltage combinations are available. Contact your local Eaton sales office for assistance if the voltage you require is not included in this catalog.
For other ratings or catalog numbers not shown, or for special enclosure types (including stainless steel), refer to Eaton.
Frame drawings/dimensions information begins on **Page V2-T2-204**.

Three-Phase— K-Factor Rated 60 Hz DOE 2016 Energy-Efficient— Aluminum Windings

K-20 600 Delta Volts to 208Y/120 Volts

kVA	Temperature Rise °C	Frame	Wiring Diagram	Weight Lb (kg) ①	Type 3R WS Kit	Wallmount Bracket	Catalog Number
15	150	Contact local Eaton representative					**G60M28T1516**
30							**G60M28T3016**
45							**G60M28T4516**
75							**G60M28T7516**
112.5							**G60M28T1216**
150							**G60M28T4916**
225							**G60M28T2216**
300							**G60M28T3316**
500							**G60M28T5516**
15	115	Contact local Eaton representative					**G60M28F1516**
30							**G60M28F3016**
45							**G60M28F4516**
75							**G60M28F7516**
112.5							**G60M28F1216**
150							**G60M28F4916**
225							**G60M28F2216**
300							**G60M28F3316**
500							**G60M28F5516**
15	80	Contact local Eaton representative					**G60M28B1516**
30							**G60M28B3016**
45							**G60M28B4516**
75							**G60M28B7516**
112.5							**G60M28B1216**
150							**G60M28B4916**
225							**G60M28B2216**
300							**G60M28B3316**

Notes

① Frames (dimensions and weights) subject to revision.

Additional voltage combinations are available. Contact your local Eaton sales office for assistance if the voltage you require is not included in this catalog.
For other ratings or catalog numbers not shown, or for special enclosure types (including stainless steel), refer to Eaton.
Frame drawings/dimensions information begins on **Page V2-T2-204**.

Three-Phase— K-Factor Rated 60 Hz DOE 2016 Energy-Efficient— Aluminum Windings

K-20 600 Delta Volts to 480Y/277 Volts

kVA	Temperature Rise °C	Frame	Wiring Diagram	Weight Lb (kg) ①	Type 3R WS Kit	Wallmount Bracket	Catalog Number
15	150	Contact local Eaton representative					**G60M47T1516**
30							**G60M47T3016**
45							**G60M47T4516**
75							**G60M47T7516**
112.5							**G60M47T1216**
150							**G60M47T4916**
225							**G60M47T2216**
300							**G60M47T3316**
500							**G60M47T5516**
15	115	Contact local Eaton representative					**G60M47F1516**
30							**G60M47F3016**
45							**G60M47F4516**
75							**G60M47F7516**
112.5							**G60M47F1216**
150							**G60M47F4916**
225							**G60M47F2216**
300							**G60M47F3316**
500							**G60M47F5516**
15	80	Contact local Eaton representative					**G60M47B1516**
30							**G60M47B3016**
45							**G60M47B4516**
75							**G60M47B7516**
112.5							**G60M47B1216**
150							**G60M47B4916**
225							**G60M47B2216**
300							**G60M47B3316**

Notes

① Frames (dimensions and weights) subject to revision.

Additional voltage combinations are available. Contact your local Eaton sales office for assistance if the voltage you require is not included in this catalog.
For other ratings or catalog numbers not shown, or for special enclosure types (including stainless steel), refer to Eaton.
Frame drawings/dimensions information begins on **Page V2-T2-204**.

Three-Phase— K-Factor Rated 60 Hz DOE 2016 Energy-Efficient— Copper Windings

K-20 480 Delta Volts to 208Y/120 Volts

kVA	Temperature Rise °C	Frame	Wiring Diagram	Weight Lb (kg) ①	Type 3R WS Kit	Wallmount Bracket	Catalog Number
15	150	Contact local Eaton representative					**G48M28T1516CU**
30							**G48M28T3016CU**
45							**G48M28T4516CU**
75							**G48M28T7516CU**
112.5							**G48M28T1216CU**
150							**G48M28T4916CU**
225							**G48M28T2216CU**
300							**G48M28T3316CU**
500							**G48M28T5516CU**
15	115	Contact local Eaton representative					**G48M28F1516CU**
30							**G48M28F3016CU**
45							**G48M28F4516CU**
75							**G48M28F7516CU**
112.5							**G48M28F1216CU**
150							**G48M28F4916CU**
225							**G48M28F2216CU**
300							**G48M28F3316CU**
500							**G48M28F5516CU**
15	80	Contact local Eaton representative					**G48M28B1516CU**
30							**G48M28B3016CU**
45							**G48M28B4516CU**
75							**G48M28B7516CU**
112.5							**G48M28B1216CU**
150							**G48M28B4916CU**
225							**G48M28B2216CU**
300							**G48M28B3316CU**

Notes

① Frames (dimensions and weights) subject to revision.

Additional voltage combinations are available. Contact your local Eaton sales office for assistance if the voltage you require is not included in this catalog.
For other ratings or catalog numbers not shown, or for special enclosure types (including stainless steel), refer to Eaton.
Frame drawings/dimensions information begins on **Page V2-T2-204**.

Three-Phase— K-Factor Rated 60 Hz DOE 2016 Energy-Efficient— Copper Windings

K-20 480 Delta Volts to 480Y/277 Volts

kVA	Temperature Rise °C	Frame	Wiring Diagram	Weight Lb (kg) ①	Type 3R WS Kit	Wallmount Bracket	Catalog Number
15	150	Contact local Eaton representative					**G48M47T1516CU**
30							**G48M47T3016CU**
45							**G48M47T4516CU**
75							**G48M47T7516CU**
112.5							**G48M47T1216CU**
150							**G48M47T4916CU**
225							**G48M47T2216CU**
300							**G48M47T3316CU**
500							**G48M47T5516CU**
15	115	Contact local Eaton representative					**G48M47F1516CU**
30							**G48M47F3016CU**
45							**G48M47F4516CU**
75							**G48M47F7516CU**
112.5							**G48M47F1216CU**
150							**G48M47F4916CU**
225							**G48M47F2216CU**
300							**G48M47F3316CU**
500							**G48M47F5516CU**
15	80	Contact local Eaton representative					**G48M47B1516CU**
30							**G48M47B3016CU**
45							**G48M47B4516CU**
75							**G48M47B7516CU**
112.5							**G48M47B1216CU**
150							**G48M47B4916CU**
225							**G48M47B2216CU**
300							**G48M47B3316CU**

Notes

① Frames (dimensions and weights) subject to revision.

Additional voltage combinations are available. Contact your local Eaton sales office for assistance if the voltage you require is not included in this catalog.
For other ratings or catalog numbers not shown, or for special enclosure types (including stainless steel), refer to Eaton.
Frame drawings/dimensions information begins on **Page V2-T2-204**.

Three-Phase— K-Factor Rated 60 Hz DOE 2016 Energy-Efficient— Copper Windings

K-20 600 Delta Volts to 208Y/120 Volts

kVA	Temperature Rise °C	Frame	Wiring Diagram	Weight Lb (kg) ①	Type 3R WS Kit	Wallmount Bracket	Catalog Number
15	150	Contact local Eaton representative					**G60M28T1516CU**
30							**G60M28T3016CU**
45							**G60M28T4516CU**
75							**G60M28T7516CU**
112.5							**G60M28T1216CU**
150							**G60M28T4916CU**
225							**G60M28T2216CU**
300							**G60M28T3316CU**
500							**G60M28T5516CU**
15	115	Contact local Eaton representative					**G60M28F1516CU**
30							**G60M28F3016CU**
45							**G60M28F4516CU**
75							**G60M28F7516CU**
112.5							**G60M28F1216CU**
150							**G60M28F4916CU**
225							**G60M28F2216CU**
300							**G60M28F3316CU**
500							**G60M28F5516CU**
15	80	Contact local Eaton representative					**G60M28B1516CU**
30							**G60M28B3016CU**
45							**G60M28B4516CU**
75							**G60M28B7516CU**
112.5							**G60M28B1216CU**
150							**G60M28B4916CU**
225							**G60M28B2216CU**
300							**G60M28B3316CU**

Notes

① Frames (dimensions and weights) subject to revision.

Additional voltage combinations are available. Contact your local Eaton sales office for assistance if the voltage you require is not included in this catalog.
For other ratings or catalog numbers not shown, or for special enclosure types (including stainless steel), refer to Eaton.
Frame drawings/dimensions information begins on **Page V2-T2-204**.

Three-Phase— K-Factor Rated 60 Hz DOE 2016 Energy-Efficient— Copper Windings

K-20 600 Delta Volts to 480Y/277 Volts

kVA	Temperature Rise °C	Frame	Wiring Diagram	Weight Lb (kg) ①	Type 3R WS Kit	Wallmount Bracket	Catalog Number
15	150	Contact local Eaton representative					**G60M47T1516CU**
30							**G60M47T3016CU**
45							**G60M47T4516CU**
75							**G60M47T7516CU**
112.5							**G60M47T1216CU**
150							**G60M47T4916CU**
225							**G60M47T2216CU**
300							**G60M47T3316CU**
500							**G60M47T5516CU**
15	115	Contact local Eaton representative					**G60M47F1516CU**
30							**G60M47F3016CU**
45							**G60M47F4516CU**
75							**G60M47F7516CU**
112.5							**G60M47F1216CU**
150							**G60M47F4916CU**
225							**G60M47F2216CU**
300							**G60M47F3316CU**
500							**G60M47F5516CU**
15	80	Contact local Eaton representative					**G60M47B1516CU**
30							**G60M47B3016CU**
45							**G60M47B4516CU**
75							**G60M47B7516CU**
112.5							**G60M47B1216CU**
150							**G60M47B4916CU**
225							**G60M47B2216CU**
300							**G60M47B3316CU**

Notes

① Frames (dimensions and weights) subject to revision.

Additional voltage combinations are available. Contact your local Eaton sales office for assistance if the voltage you require is not included in this catalog.
For other ratings or catalog numbers not shown, or for special enclosure types (including stainless steel), refer to Eaton.
Frame drawings/dimensions information begins on **Page V2-T2-204**.

Accessories

Please refer to Section 2.7 **Page V2-T2-167**.

Technical Data and Specifications

Frequency

Eaton standard low-voltage dry-type distribution transformers are designed for 60 Hz operation. Transformers required for other frequencies are available and must be specifically designed.

Overload Capability

Short-term overload is designed into transformers as required by ANSI. Low-voltage dry-type distribution transformers will deliver 200% nameplate load for one-half hour, 150% load for one hour, and 125% load for four hours without being damaged, provided that a constant 50% load precedes and follows the overload. See ANSI C57.96-01.250 for additional limitations.

Continuous overload capacity is not deliberately designed into a transformer because the design objective is to be within the allowed winding temperature rise with nameplate loading.

Electrostatic Shielding

There are no industry standards for electrostatic shield performance. Eaton-manufactured transformers have been tested by an independent laboratory to meet the following attenuation levels:

- When tested per MIL-Std-220A, Method of Insertion Loss Measurement, with matched impedance no load technique:
  - Common mode noise attenuation:
    - Minus 80 dBA minimum at 0.1 kHz to 1.5 kHz; minus 55 dBA minimum at 1.51 kHz to 100 kHz
  - Normal mode (Transverse mode) noise attenuation:
    - Minus 35 dBA minimum at 1.5 kHz to 10 kHz
- Primary to Secondary Capacitance of 24.74–18.06 picofarads on the range 100–20 kHz

Insulation System and Temperature Rise

Industry standards classify insulation systems and rise as shown below:

Insulation System Classification

Ambient	+ Winding Rise	+ Hot Spot	= Temp. Class
40°C	55°C	10°C	105°C
40°C	80°C	30°C	150°C
25°C	135°C	20°C	180°C
40°C	115°C	30°C	185°C
40°C	150°C	30°C	220°C

The design life of transformers having different insulation systems is the same—the lower-temperature systems are designed for the same life as the higher-temperature systems.

Enclosures

Eaton ventilated transformers, Type KT, use a NEMA 2 rated (drip-proof) enclosure as standard, and are rated NEMA 3R with the addition of weathershields. Transformers manufactured in enclosures 939, 940, 942, 943, 944 and 945 are UL Listed to be installed indoors (without weathershields) with just 2 inches clearance on the sides and behind the transformer.

Winding Terminations

Primary and secondary windings are terminated in the wiring compartment. Ventilated transformers have leads brought out to aluminum pads that are pre-drilled to accept Cu/Al lugs. **Lugs are not supplied with these transformers.** Eaton recommends that external cables be rated 75°C for ventilated designs.

Sound Levels

All Eaton 600 volt class general-purpose low-voltage dry-type distribution transformers are designed to meet NEMA ST-20 sound levels listed here. These are the sound levels measured in a soundproof environment. Actual sound levels measured at an installation will likely be higher due to electrical connections and environmental conditions.

Lower sound levels are available and should be specified when the transformer is going to be installed in an area where sound may be a concern.

For additional information, please refer to Section 2.7 **Page V2-T2-171**.

Average Sound Levels

NEMA ST-20 Average Sound Level, dB

Equivalent Winding kVA Range	Self-Cooled Ventilated (up to 1.2 kV) K-Factor 1, 4, 9	Self-Cooled Ventilated (up to 1.2 kV) K-Factor 13, 20	Encapsulated (up to 1.2 kV)
3.00 and below	40	40	45
3.01 to 9.00	40	40	45
9.01 to 15.00	45	45	50
15.01 to 30.00	45	45	50
30.01 to 50.00	45	48	50
50.01 to 75.00	50	53	55
75.01 to 112.50	50	53	55
112.51 to 150.00	50	53	55
150.01 to 225.00	55	58	57
225.01 to 300.00	55	58	57
300.01 to 500.00	60	63	59
500.01 to 700.00	62	65	61
700.01 to 1000.00	64	67	63
Greater than 1000	Consult factory	Consult factory	Consult factory

Note

For other ratings or catalog numbers not shown, or for special enclosure types (including stainless steel), refer to Eaton.

Harmonic Mitigating Transformer



Contents

Description	*Page*
DOE 2016 Energy-Efficient Harmonic Mitigating Transformers	
Features and Benefits	**V2-T2-65**
Standards and Certifications	**V2-T2-65**
Catalog Number Selection	**V2-T2-66**
Product Selection	**V2-T2-67**
Accessories	**V2-T2-75**
Technical Data and Specifications	**V2-T2-75**

Product Description

Note: The following pages provide listings for most standard transformer ratings and catalog numbers. For other ratings or catalog numbers not shown, or for special enclosure types (including stainless steel), refer to Eaton.

The electrical transformer has been a staple of electrical power systems for the past 100+ years. While the types of electrical loads that are being added to our systems today have radically changed, the transformer has stayed relatively the same in design during this time frame. Eaton's harmonic mitigating transformer (HMT) represents the evolution of the transformer into something that will best provide clean, energy-efficient electricity to power the loads of today and tomorrow. The recent shift of our electrical loads from predominately AC consumers (resistive heating elements, incandescent lighting, three-phase motor load) to DC consumers (such as computers, fax machines, printers, down to the "wall-wart" that recharges the cell phone) requires that our electrical infrastructure changes as well. These new loads now introduce other currents and frequencies into our electrical power systems—commonly known as "harmonics." Harmonic currents can cause additional heating, which may cause transformers, generators and conductors to become overloaded. Excessive heat is one of the major reasons that standard transformers and conductors fail prematurely. These harmonic currents have various other effects (such as "loss of ride-through capability," reduced lifespan and mysterious misoperation of equipment) on the components and loads of an electrical distribution system. Eaton's HMTs, when used properly within an electrical system, will help keep the loads operating the way the manufacturer designed them and keep the facility's electrical system free from voltage distortion.

Three-Phase, Type DT-3 HMT, 60 Hz

- Harmonic mitigating (cancellation) transformers are a cost-effective means of treating harmful harmonics in an electrical distribution system
- Reducing harmonic content in electrical systems can result in a more reliable electrical system, lower maintenance costs, less downtime, fewer equipment malfunctions, and lower cooling system capacity
- Available in a variety of phase-shift configurations that allow flexibility to target specific families of harmonics
- Harmonic treatment via electromagnetic flux cancellation
- May be installed as a stand-alone transformer, or included in IFS™
- Available in three-phase ratings, 15–500 kVA, up to 600 volts primary

Features and Benefits

- 480 volt to 208/120 volt standard. Additional voltage combinations available
- 150°C, 115°C or 80°C temperature rise available
- Aluminum windings and terminals standard; copper available
- 200% rated neutral
- Single electrostatic shield for attenuation of common mode and transverse mode noise
- Approximately 98% efficient when operated in systems with 100% nonlinear load profiles
- 220°C insulation system
- Third-party tested for harmonic performance and energy efficiency
- Meet NEMA ST-20 sound standards
- Eliminate circulating harmonic currents in primary windings of transformers
- Enclosures are NEMA 2 drip-proof. The addition of optional weather-shields makes the enclosure NEMA 3R rainproof
- Harmonic cancellation via electromagnetic flux cancellation. Filters, capacitors or other such devices are not used
- Help meet IEEE 519 harmonic limits

Standards and Certifications

- UL listed

Listed

Energy Verified

Industry Standards

All Eaton low-voltage dry-type transformers are built and tested in accordance with applicable NEMA, ANSI and IEEE standards. Harmonic mitigating transformers are UL listed.

IEEE 519-1992

Proper use of Eaton's harmonic mitigating transformers within your electrical system will help you to meet the harmonic distortion limits as proposed by IEEE 519-1992, "IEEE Recommended Practices and Requirements for Harmonic Control in Electrical Power Systems."

Seismic Qualified

Eaton low-voltage dry-type distribution transformers are seismically qualified and exceed the requirements of the Uniform Building Code (UBC), International Building Code (IBC) and California Code Title 24.

Catalog Number Selection ①

DOE 2016 Energy-Efficient Harmonic Mitigating Transformers

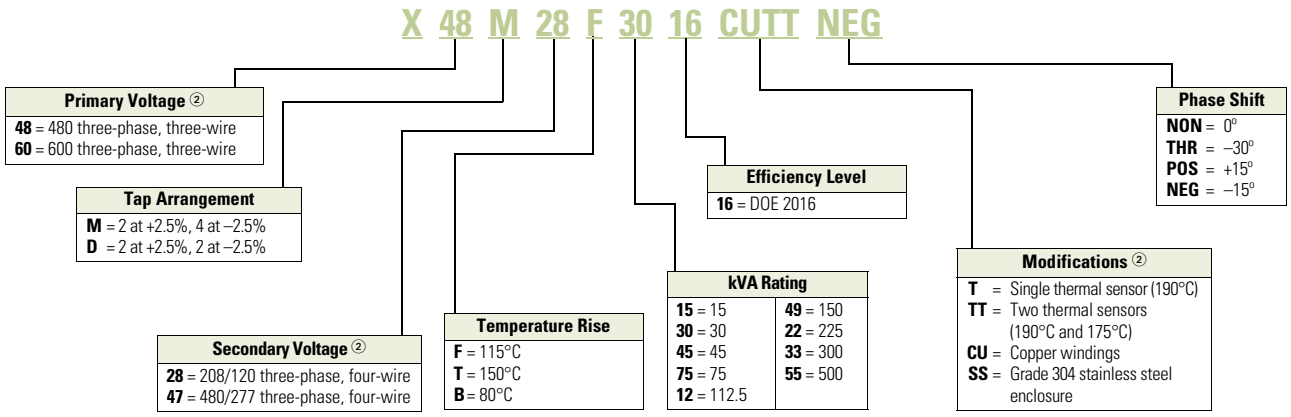

Harmonic Mitigating Transformers

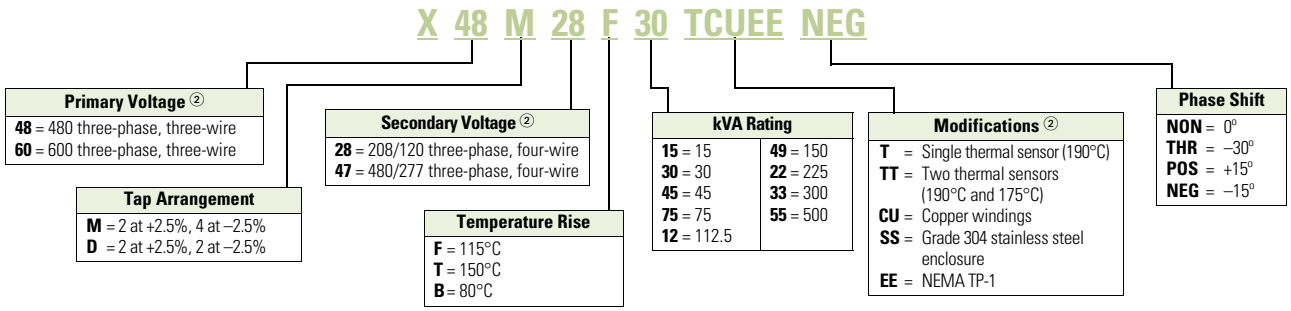

DOE 2016 Efficiency Levels

Dry-Type Distribution Transformers—Low-Voltage (600V and below)

Three-Phase

kVA	Efficiency
15	97.89
30	98.23
45	98.40
75	98.60
112.5	98.74
150	98.83
225	98.94
300	99.02
500	99.14
750	99.23
1000	99.28

Notes

① Do not use to create catalog numbers because all combinations may not be valid.

② The most common ratings are shown. Contact Eaton for availability of additional ratings.

Product Selection

Three-Phase—Harmonic Mitigating Transformers 60 Hz DOE 2016 Energy-Efficient— Aluminum Windings

480 Delta Volts to 208/120 Volts—Type NON 0° Phase Shift

kVA	Temperature Rise °C	Frame	Wiring Diagram	Weight Lb (kg)	Type 3R WS Kit	Wallmount Bracket	Catalog Number
15	150	Contact local Eaton representative					**X48M28T1516NON**
30							**X48M28T3016NON**
45							**X48M28T4516NON**
75							**X48M28T7516NON**
112.5							**X48M28T1216NON**
150							**X48M28T4916NON**
225							**X48M28T2216NON**
300							**X48M28T3316NON**
500							**X48M28T5516NON**
15	115	Contact local Eaton representative					**X48M28F1516NON**
30							**X48M28F3016NON**
45							**X48M28F4516NON**
75							**X48M28F7516NON**
112.5							**X48M28F1216NON**
150							**X48M28F4916NON**
225							**X48M28F2216NON**
300							**X48M28F3316NON**
500							**X48M28F5516NON**
15	80	Contact local Eaton representative					**X48M28B1516NON**
30							**X48M28B3016NON**
45							**X48M28B4516NON**
75							**X48M28B7516NON**
112.5							**X48M28B1216NON**
150							**X48M28B4916NON**
225							**X48M28B2216NON**
300							**X48M28B3316NON**

Note

Additional voltage combinations are available. Contact your local Eaton sales office for assistance if the voltage you require is not included in this catalog.
For other ratings or catalog numbers not shown, or for special enclosure types (including stainless steel), refer to Eaton.
Frame drawings/dimensions information begins on **Page V2-T2-204**.

Three-Phase—Harmonic Mitigating Transformers 60 Hz DOE 2016 Energy-Efficient— Aluminum Windings

600 Delta Volts to 208/120 Volts—Type NON 0° Phase Shift

kVA	Temperature Rise °C	Frame	Wiring Diagram	Weight Lb (kg)	Type 3R WS Kit	Wallmount Bracket	Catalog Number
15	150	Contact local Eaton representative					X60M28T1516NON
30							X60M28T3016NON
45							X60M28T4516NON
75							X60M28T7516NON
112.5							X60M28T1216NON
150							X60M28T4916NON
225							X60M28T2216NON
300							X60M28T3316NON
500							X60M28T5516NON
15	115	Contact local Eaton representative					X60M28F1516NON
30							X60M28F3016NON
45							X60M28F4516NON
75							X60M28F7516NON
112.5							X60M28F1216NON
150							X60M28F4916NON
225							X60M28F2216NON
300							X60M28F3316NON
500							X60M28F5516NON
15	80	Contact local Eaton representative					X60M28B1516NON
30							X60M28B3016NON
45							X60M28B4516NON
75							X60M28B7516NON
112.5							X60M28B1216NON
150							X60M28B4916NON
225							X60M28B2216NON
300							X60M28B3316NON

Note

Additional voltage combinations are available. Contact your local Eaton sales office for assistance if the voltage you require is not included in this catalog.
For other ratings or catalog numbers not shown, or for special enclosure types (including stainless steel), refer to Eaton.
Frame drawings/dimensions information begins on **Page V2-T2-204**.

Three-Phase—Harmonic Mitigating Transformers 60 Hz DOE 2016 Energy-Efficient— Copper Windings

480 Delta Volts to 208/120 Volts—Type NON 0° Phase Shift

kVA	Temperature Rise °C	Frame	Wiring Diagram	Weight Lb (kg)	Type 3R WS Kit	Wallmount Bracket	Catalog Number
15	150	Contact local Eaton representative					**X48M28T1516CUNON**
30							**X48M28T3016CUNON**
45							**X48M28T4516CUNON**
75							**X48M28T7516CUNON**
112.5							**X48M28T1216CUNON**
150							**X48M28T4916CUNON**
225							**X48M28T2216CUNON**
300							**X48M28T3316CUNON**
500							**X48M28T5516CUNON**
15	115	Contact local Eaton representative					**X48M28F1516CUNON**
30							**X48M28F3016CUNON**
45							**X48M28F4516CUNON**
75							**X48M28F7516CUNON**
112.5							**X48M28F1216CUNON**
150							**X48M28F4916CUNON**
225							**X48M28F2216CUNON**
300							**X48M28F3316CUNON**
500							**X48M28F5516CUNON**
15	80	Contact local Eaton representative					**X48M28B1516CUNON**
30							**X48M28B3016CUNON**
45							**X48M28B4516CUNON**
75							**X48M28B7516CUNON**
112.5							**X48M28B1216CUNON**
150							**X48M28B4916CUNON**
225							**X48M28B2216CUNON**
300							**X48M28B3316CUNON**

Note

Additional voltage combinations are available. Contact your local Eaton sales office for assistance if the voltage you require is not included in this catalog.
For other ratings or catalog numbers not shown, or for special enclosure types (including stainless steel), refer to Eaton.
Frame drawings/dimensions information begins on **Page V2-T2-204**.

Three-Phase—Harmonic Mitigating Transformers 60 Hz DOE 2016 Energy-Efficient— Copper Windings

600 Delta Volts to 208/120 Volts—Type NON 0° Phase Shift

kVA	Temperature Rise °C	Frame	Wiring Diagram	Weight Lb (kg)	Type 3R WS Kit	Wallmount Bracket	Catalog Number
15	150	Contact local Eaton representative					X60M28T1516CUNON
30							X60M28T3016CUNON
45							X60M28T4516CUNON
75							X60M28T7516CUNON
112.5							X60M28T1216CUNON
150							X60M28T4916CUNON
225							X60M28T2216CUNON
300							X60M28T3316CUNON
500							X60M28T5516CUNON
15	115	Contact local Eaton representative					X60M28F1516CUNON
30							X60M28F3016CUNON
45							X60M28F4516CUNON
75							X60M28F7516CUNON
112.5							X60M28F1216CUNON
150							X60M28F4916CUNON
225							X60M28F2216CUNON
300							X60M28F3316CUNON
500							X60M28F5516CUNON
15	80	Contact local Eaton representative					X60M28B1516CUNON
30							X60M28B3016CUNON
45							X60M28B4516CUNON
75							X60M28B7516CUNON
112.5							X60M28B1216CUNON
150							X60M28B4916CUNON
225							X60M28B2216CUNON
300							X60M28B3316CUNON

Note

Additional voltage combinations are available. Contact your local Eaton sales office for assistance if the voltage you require is not included in this catalog.
For other ratings or catalog numbers not shown, or for special enclosure types (including stainless steel), refer to Eaton.
Frame drawings/dimensions information begins on **Page V2-T2-204**.

Three-Phase—Harmonic Mitigating Transformers 60 Hz DOE 2016 Energy-Efficient— Aluminum Windings

480 Delta Volts to 208/120 Volts—Type THR 30° Phase Shift

kVA	Temperature Rise °C	Frame	Wiring Diagram	Weight Lb (kg)	Type 3R WS Kit	Wallmount Bracket	Catalog Number
15	150	Contact local Eaton representative					**X48M28T1516THR**
30							**X48M28T3016THR**
45							**X48M28T4516THR**
75							**X48M28T7516THR**
112.5							**X48M28T1216THR**
150							**X48M28T4916THR**
225							**X48M28T2216THR**
300							**X48M28T3316THR**
500							**X48M28T5516THR**
15	115	Contact local Eaton representative					**X48M28F1516THR**
30							**X48M28F3016THR**
45							**X48M28F4516THR**
75							**X48M28F7516THR**
112.5							**X48M28F1216THR**
150							**X48M28F4916THR**
225							**X48M28F2216THR**
300							**X48M28F3316THR**
500							**X48M28F5516THR**
15	80	Contact local Eaton representative					**X48M28B1516THR**
30							**X48M28B3016THR**
45							**X48M28B4516THR**
75							**X48M28B7516THR**
112.5							**X48M28B1216THR**
150							**X48M28B4916THR**
225							**X48M28B2216THR**
300							**X48M28B3316THR**

Note

Additional voltage combinations are available. Contact your local Eaton sales office for assistance if the voltage you require is not included in this catalog.
For other ratings or catalog numbers not shown, or for special enclosure types (including stainless steel), refer to Eaton.
Frame drawings/dimensions information begins on **Page V2-T2-204**.

Three-Phase—Harmonic Mitigating Transformers 60 Hz DOE 2016 Energy-Efficient— Aluminum Windings

600 Delta Volts to 208/120 Volts—Type THR 30° Phase Shift

kVA	Temperature Rise °C	Frame	Wiring Diagram	Weight Lb (kg)	Type 3R WS Kit	Wallmount Bracket	Catalog Number
15	150	Contact local Eaton representative					X60M28T1516THR
30							X60M28T3016THR
45							X60M28T4516THR
75							X60M28T7516THR
112.5							X60M28T1216THR
150							X60M28T4916THR
225							X60M28T2216THR
300							X60M28T3316THR
500							X60M28T5516THR
15	115	Contact local Eaton representative					X60M28F1516THR
30							X60M28F3016THR
45							X60M28F4516THR
75							X60M28F7516THR
112.5							X60M28F1216THR
150							X60M28F4916THR
225							X60M28F2216THR
300							X60M28F3316THR
500							X60M28F5516THR
15	80	Contact local Eaton representative					X60M28B1516THR
30							X60M28B3016THR
45							X60M28B4516THR
75							X60M28B7516THR
112.5							X60M28B1216THR
150							X60M28B4916THR
225							X60M28B2216THR
300							X60M28B3316THR

Note

Additional voltage combinations are available. Contact your local Eaton sales office for assistance if the voltage you require is not included in this catalog.
For other ratings or catalog numbers not shown, or for special enclosure types (including stainless steel), refer to Eaton.
Frame drawings/dimensions information begins on **Page V2-T2-204**.

Three-Phase—Harmonic Mitigating Transformers 60 Hz DOE 2016 Energy-Efficient— Copper Windings

480 Delta Volts to 208/120 Volts—Type THR 30° Phase Shift

kVA	Temperature Rise °C	Frame	Wiring Diagram	Weight Lb (kg)	Type 3R WS Kit	Wallmount Bracket	Catalog Number
15	150	Contact local Eaton representative					X48M28T1516CUTHR
30							X48M28T3016CUTHR
45							X48M28T4516CUTHR
75							X48M28T7516CUTHR
112.5							X48M28T1216CUTHR
150							X48M28T4916CUTHR
225							X48M28T2216CUTHR
300							X48M28T3316CUTHR
500							X48M28T5516CUTHR
15	115	Contact local Eaton representative					X48M28F1516CUTHR
30							X48M28F3016CUTHR
45							X48M28F4516CUTHR
75							X48M28F7516CUTHR
112.5							X48M28F1216CUTHR
150							X48M28F4916CUTHR
225							X48M28F2216CUTHR
300							X48M28F3316CUTHR
500							X48M28F5516CUTHR
15	80	Contact local Eaton representative					X48M28B1516CUTHR
30							X48M28B3016CUTHR
45							X48M28B4516CUTHR
75							X48M28B7516CUTHR
112.5							X48M28B1216CUTHR
150							X48M28B4916CUTHR
225							X48M28B2216CUTHR
300							X48M28B3316CUTHR

Note

Additional voltage combinations are available. Contact your local Eaton sales office for assistance if the voltage you require is not included in this catalog.
For other ratings or catalog numbers not shown, or for special enclosure types (including stainless steel), refer to Eaton.
Frame drawings/dimensions information begins on **Page V2-T2-204**.

Three-Phase—Harmonic Mitigating Transformers 60 Hz DOE 2016 Energy-Efficient— Copper Windings

600 Delta Volts to 208/120 Volts—Type THR 30° Phase Shift

kVA	Temperature Rise °C	Frame	Wiring Diagram	Weight Lb (kg)	Type 3R WS Kit	Wallmount Bracket	Catalog Number
15	150	Contact local Eaton representative					**X60M28T1516CUTHR**
30							**X60M28T3016CUTHR**
45							**X60M28T4516CUTHR**
75							**X60M28T7516CUTHR**
112.5							**X60M28T1216CUTHR**
150							**X60M28T4916CUTHR**
225							**X60M28T2216CUTHR**
300							**X60M28T3316CUTHR**
500							**X60M28T5516CUTHR**
15	115	Contact local Eaton representative					**X60M28F1516CUTHR**
30							**X60M28F3016CUTHR**
45							**X60M28F4516CUTHR**
75							**X60M28F7516CUTHR**
112.5							**X60M28F1216CUTHR**
150							**X60M28F4916CUTHR**
225							**X60M28F2216CUTHR**
300							**X60M28F3316CUTHR**
500							**X60M28F5516CUTHR**
15	80	Contact local Eaton representative					**X60M28B1516CUTHR**
30							**X60M28B3016CUTHR**
45							**X60M28B4516CUTHR**
75							**X60M28B7516CUTHR**
112.5							**X60M28B1216CUTHR**
150							**X60M28B4916CUTHR**
225							**X60M28B2216CUTHR**
300							**X60M28B3316CUTHR**

Note

Additional voltage combinations are available. Contact your local Eaton sales office for assistance if the voltage you require is not included in this catalog.
For other ratings or catalog numbers not shown, or for special enclosure types (including stainless steel), refer to Eaton.
Frame drawings/dimensions information begins on **Page V2-T2-204**.

Accessories

Harmonic mitigating transformers are available with the same options and accessories as general-purpose ventilated transformers. Please refer to Section 2.7 **Page V2-T2-167**.

Technical Data and Specifications

Frequency

Eaton standard low-voltage dry-type distribution transformers are designed for 60 Hz operation. Transformers required for other frequencies are available and must be specifically designed.

Overload Capacity

Short-term overload is designed into transformers as required by ANSI. Dry-type distribution transformers will deliver 200% nameplate load for one-half hour; 150% load for one hour and 125% load for four hours without being damaged, provided that a constant 50% load precedes and follows the overload. See ANSI C57.96-01.250 for additional limitations.

Continuous overload capacity is not deliberately designed into a transformer because the design objective is to be within the allowed winding temperature rise with nameplate loading.

Insulation System and Temperature Rise

Industry standards classify insulation systems and rise as shown below:

Insulation System Classification

Ambient	+ Winding Rise	+ Hot Spot	= Temp. Class
40°C	55°C	10°C	105°C
40°C	80°C	30°C	150°C
25°C	135°C	20°C	180°C
40°C	115°C	30°C	185°C
40°C	150°C	30°C	220°C

The design life of transformers having different insulation systems is the same—the lower-temperature systems are designed for the same life as the higher-temperature systems.

Enclosures

Eaton ventilated transformers use a NEMA 2 rated (drip-proof) enclosure as a standard, and are rated NEMA 3R with the addition of weathershields. Transformers manufactured in enclosures 939, 940, 942, 943, 944 and 945 are UL Listed to be installed indoors (without weathershields) with just 2 inches clearance on the sides and behind the transformer.

Sound Levels

All Eaton 600 volt class general-purpose low-voltage dry-type distribution transformers are designed to meet NEMA ST-20 levels listed here.

Lower sound levels are available and must be designed specially.

Average Sound Levels

NEMA ST-20 Average Sound Level, dB

Equivalent Winding kVA Range	Self-Cooled Ventilated (up to 1.2 kV) K-Factor 1, 4, 9	Self-Cooled Ventilated (up to 1.2 kV) K-Factor 13, 20	Encapsulated (up to 1.2 kV)
3.00 and below	40	40	45
3.01 to 9.00	40	40	45
9.01 to 15.00	45	45	50
15.01 to 30.00	45	45	50
30.01 to 50.00	45	48	50
50.01 to 75.00	50	53	55
75.01 to 112.50	50	53	55
112.51 to 150.00	50	53	55
150.01 to 225.00	55	58	57
225.01 to 300.00	55	58	57
300.01 to 500.00	60	63	59
500.01 to 700.00	62	65	61
700.01 to 1000.00	64	67	63
Greater than 1000	Consult factory	Consult factory	Consult factory

Note

For other ratings or catalog numbers not shown, or for special enclosure types (including stainless steel), refer to Eaton.

Demystifying Harmonic Mitigating Transformer Myths

Aren't "power factor corrected" computer power supplies fixing all harmonics?

The use of power factor corrected computer power supplies is a great first start to reducing harmonic currents in your facility. These are becoming prevalent in server applications, but have not "crossed-over" into the laptop computer/business computer. Remember also that, once the computer power supply harmonics are addressed, you will still need to address the harmonic currents coming from the variety of other equipment in your facility.

Don't K-rated transformers fix harmonics?

The K-rated transformer was created to address the additional heat being produced by standard delta-wye transformers when feeding nonlinear loads. The goal of the K-rated transformer is to dissipate the heat produced over a larger area, thus providing the illusion of correction. The K-rated transformer does nothing to reduce the root issue of harmonic currents or correct power quality issues. Because of their larger size, they also consume additional energy to "do the same work" and are counter-productive to an energy-efficient electrical distribution design.

Don't you need two HMTs for any correction to occur?

The design of HMTs allows them to address different families of harmonic currents in different ways. A single HMT will treat the triplen (3rd, 9th, 15th and so on) harmonic currents in its secondary winding. The 5th, 7th, 17th and 19th harmonic family is treated on a system basis through a technique known as "phase shifting." This phase shift does occur between the Type NON and Type THR, and the Type POS and Type NEG harmonic mitigating transformers—and this can also occur between a Type NON and a standard delta-wye transformer (that is probably already existing within your facility). See our Sample HMT Applications area for additional information.

The cost of HMTs is too high!

While the initial cost of HMTs is typically 1.5 to 4 times the cost of a standard transformer (due to the additional design, materials and labor involved in creating the magnetics necessary to reduce harmonic impact)—to not use an HMT in a harmonic environment will actually cost you 250% more energy loss in the transformer. Due to the relatively long life of a transformer (20–30 years), these additional energy costs easily overshadow the initial one-time first cost increment.

If I use one HMT, don't I need to change all my transformers?

Most facilities have only a percentage (typically 20–25%) of their electrical system that really requires the use of an HMT. This means in a typical building that only a few areas are either critical (meaning high requirements for "clean" power) or have high concentrations of electronic, nonlinear loads—requiring the use of the HMT in those specific areas. The harmonic mitigating transformer is a weapon in your arsenal in providing a complete, properly designed electrical system for today and tomorrow.

Transformer Technology Table Explanation

In understanding the product placement of the HMT, it becomes useful to have some "rule of thumb" understanding to compare products. Looking at one of the aspects of an HMT—price—you can see that, if a standard delta-wye transformer had a cost of one unit, a K-13 transformer would cost about double and an HMT would cost 1.5 to 4 times the unit cost. What's impressive to compare is the next column of information—"Energy Savings." If the amount of energy used to power today's loads is compared against a standard delta-wye transformer (that was never designed to feed today's types of loads), you can easily see that the HMT is designed to meet the issue head-on! Referring to the table's information, you can see that it would take 30% more energy to power the same computer loads with a K-13 transformer, whereas an HMT would take 25% less energy to feed those same computer loads. (This is due to the fact that the HMT has a different design than a standard delta-wye transformer and addresses the root issue of harmonic currents.) A good analogy is to look at the incandescent light bulb versus a compact fluorescent lamp—you might pay a bit more up front, but because of the large energy savings (because of the harmonic loading), you soon realize that the upfront cost pales in comparison to the potential of energy saved. Eaton would be happy to provide you with an estimation calculator to help you determine the amount of payback and return on investment (ROI) based on the incremental cost of the HMT. It's very typical to return the price differential between the HMT and a standard transformer with a few years—thus using the additional 20 to 30 years of energy savings to add to your bottom line.

Transformer Technology Comparison ①

Transformer Type	Cost	Energy Savings	Power Quality
Standard delta-wye	if 1X	if 1X	Not designed for harmonics
K-13	1.5–2X	–0.3X	Bulked up—doesn't help
HMT	2.5X	2.5X	Corrects root issue

Note

① Comparing cost, energy savings and power quality performance between the "commonly used" transformer types.

Sample HMT Applications

Typical Application of Type NON Transformer

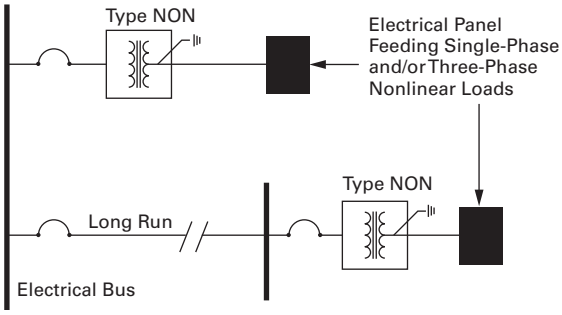

Installation of a Type NON transformer provides an effective treatment of triplen (3rd, 9th, 15th and so on) harmonic currents that are generated by loads connected to the transformer. Triplen harmonic currents are treated in the secondary windings of the transformer due to the transformer's low zero sequence impedance. Type NON transformers do not need to be used in combination with other transformers to treat triplen harmonic currents. A single Type NON transformer may be installed, or multiple units can be applied.

Type NON transformers are an ideal solution for treating triplen harmonics generated by personal computers, printers, fax machines and other office equipment, as well as by single-phase electronic ballasts, and single-phase electronic testing or monitoring devices.

Typical Application of Type NON Transformer with a Standard Delta-Wye Transformer

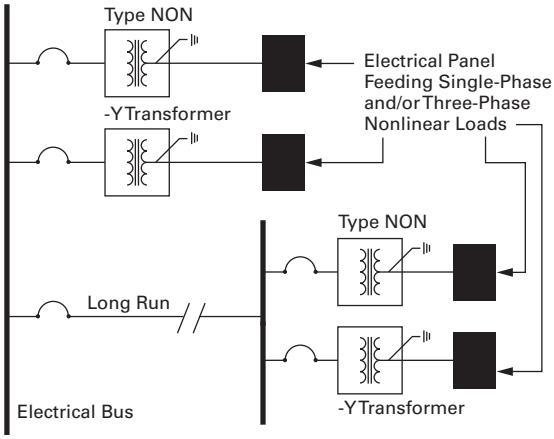

When a delta-wye transformer exists in an electrical distribution system, the addition of a Type NON transformer offers an economical solution for treating harmonic currents. The 30° phase-shift created between a Type NON harmonic mitigating transformer and a delta-wye transformer (standard transformer or K-Factor transformer) provides treatment of 5th, 7th, 17th and 19th harmonic currents. These harmonic currents are canceled in the common electrical bus that feeds the transformers.

Additionally, triplen (3rd, 9th, 15th and so on) harmonic currents generated by the loads connected to the Type NON transformer will be treated in the secondary windings of the Type NON transformer due to its low zero sequence impedance. When using two or more transformers to treat harmonics, it is better that the load be split equally between the transformers to receive the maximum benefit.

Note: Triplen currents will still circulate in the delta-wye transformer for additional waste. See figure on **Page V2-T2-78** to correct.

Optimum Application of Type NON and Type THR Transformers

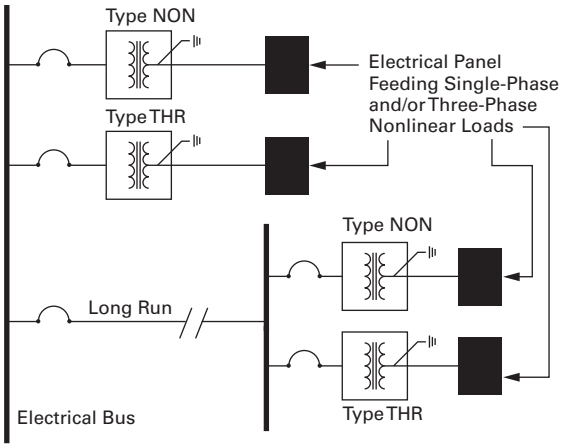

When you're searching for an optimum harmonic correction solution in an electrical distribution system, the combination of a Type NON and Type THR transformer offers a great solution. The 30° phase shift created between Type NON and type THR harmonic mitigating transformers provides treatment of 5th, 7th, 17th and 19th harmonic currents. These harmonic currents are canceled in the common electrical bus that feeds the transformers.

Additionally,triplen (3rd, 9th, 15th and so on) harmonic currents generated by the loads will be treated in the secondary windings of HMTs. This will ensure that these currents will not circulate in the primary of the transformer creating additional heat, voltage distortion and wasted energy loss. When using two or more transformers to treat harmonics, it is better that the load be split equally between the transformers to receive the maximum benefit.

Typical Application of Type NEG and Type POS Transformers

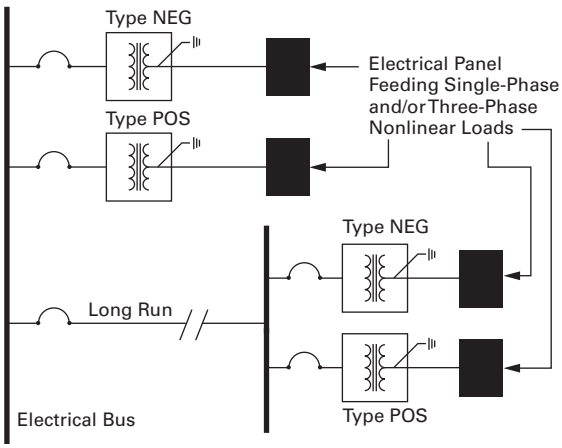

The combination of a Type POS (+15° phase-shift) transformer and a Type NEG (–15° phase-shift) transformer effectively treats 5th, 7th, 17th and 19th harmonic currents. These harmonic currents are canceled in the common electrical bus that feeds the transformers.

Additionally, triplen (3rd, 9th, 15th and so on) harmonic currents generated by the loads connected to these transformers will be treated in their secondary windings due to their low zero sequence impedance. When using two or more transformers to treat harmonics, it is better that the load be split equally between the transformers to receive the maximum benefit.

Type EP and EPT



Contents

Description	*Page*
General-Purpose Encapsulated Transformers	
Catalog Number Selection	**V2-T2-80**
Product Selection	**V2-T2-80**
Single-Phase	**V2-T2-80**
Three-Phase	**V2-T2-86**
Accessories	**V2-T2-95**
Technical Data and Specifications	**V2-T2-95**

Product Description

Note: The following pages provide listings for most standard transformer ratings and catalog numbers. For other ratings or catalog numbers not shown, or for special enclosure types (including stainless steel), refer to Eaton.

Type EP and EPT

- Encapsulated design
- Suitable for indoor or outdoor applications
- Totally enclosed, non-ventilated enclosures
- Enclosures are NEMA 3R rated
- Mountable in any position indoors and upright-only outdoors
- 180°C insulation system
- 115°C rise standard; 80°C optional
- Available in ratings through 37.5 kVA single-phase; 75 kVA three-phase
- Types EP and EPT encapsulated transformers are specifically excluded from the scope of U.S. DOE energy efficiency requirements

Application Description

The basic purpose of a transformer is voltage transformation as near as practically possible to the load for economy and distribution of power. Typical loads for dry-type distribution transformers include lighting, heating, air conditioners, fans and machine tools. Such loads are found in commercial, institutional, industrial and residential structures.

Features, Benefits and Functions

- 60 Hz operation (50/60 Hz optional)
- Short-term overload capability as required by ANSI
- Meet NEMA ST-20 sound levels

Standards and Certifications

- UL listed
- CSA certified

Listed

Industry Standards

All Eaton dry-type distribution and control transformers are built and tested in accordance with applicable NEMA, ANSI and IEEE Standards. All 600 volt class transformers are UL listed unless otherwise noted.

Seismically Qualified

Eaton manufactured dry-type distribution transformers are seismically qualified and exceed requirements of the Uniform Building Code (UBC), International Building Code (IBC), and California Code Title 24.

Catalog Number Selection

Please refer to Section 2.7 **Page V2-T2-162**.

2

Product Selection

Additional Product Selection information begins on **Page V2-T2-165**.

Single-Phase Encapsulated—Type EP, 60 Hz

Type EP 0.05–37.5 kVA



120 x 240 Volts to 120/240 Volts ①

kVA	Full Capacity Taps FCAN	FCBN	Type	°C Temp. Rise	Frame	Wiring Diagram Number	Weight Lb (kg)	Weathershield	Catalog Number
0.25	—	—	EP	115	FR57P	3E	13 (6)	Indoor–Outdoor	**S10N11P26P**
0.5	—	—			FR57P		16 (7)		**S10N11P51P**
0.75	—	—			FR67P		29 (13)		**S10N11P76P**
1	—	—			FR67P		31 (14)		**S10N11P01P**
1.5	—	—			FR67P		42 (19)		**S10N11P16P**
2	—	—			FR68P		42 (19)		**S10N11P02P**
3	—	—			FR176		55 (25)		**S10N11S03N**
5	—	—			FR177		113 (51)		**S10N11S05N**
7.5	—	—			FR178		123 (56)		**S10N11S07N**
10	—	—			FR179		193 (88)		**S10N11S10N**
15	—	—			FR180		216 (98)		**S10N11S15N**
25	—	—			FR182		375 (170)		**S10N11S25N**

208 Volts to 120/240 Volts ①

kVA	Full Capacity Taps FCAN	FCBN	Type	°C Temp. Rise	Frame	Wiring Diagram Number	Weight Lb (kg)	Weathershield	Catalog Number
0.25	—	—	EP	115	FR57P	26A	13 (6)	Indoor–Outdoor	**S29N11P26P**
0.5	—	—			FR57P		16 (7)		**S29N11P51P**
0.75	—	—			FR67P		29 (13)		**S29N11P76P**
1	—	—			FR67P		31 (14)		**S29N11P01P**
1.5	—	—			FR67P		42 (19)		**S29N11P16P**
2	—	—			FR68P		42 (19)		**S29N11P02P**
3	—	—			FR176		65 (30)		**S29N11S03N**
5	—	—			FR177		113 (51)		**S29N11S05N**
7.5	—	—			FR178		123 (56)		**S29N11S07N**
10	—	—			FR179		193 (88)		**S29N11S10N**
15	—	—			FR180		216 (98)		**S29N11S15N**
25	—	—			FR182		395 (179)		**S29N11S25N**

Notes

① Contact Eaton for availability of 0.05–0.25 kVA designs.

Contact your local Eaton sales office for CE Mark transformer requirements. For other ratings or catalog numbers not shown, or for special enclosure types (including stainless steel), refer to Eaton. Frame drawings/dimensions information begins on **Page V2-T2-204**.

Single-Phase Encapsulated—Type EP, 60 Hz

277 Volts to 120/240 Volts ①

kVA	Full Capacity Taps FCAN	FCBN	Type	°C Temp. Rise	Frame	Wiring Diagram Number	Weight Lb (kg)	Weathershield	Catalog Number
0.25	—	—	EP	115	FR57P	524A	13 (6)	Indoor–Outdoor	**S27N11P26P**
0.5	—	—			FR58AP		26 (12)		**S27N11P51P**
0.75	—	—			FR58AP		29 (13)		**S27N11P76P**
1	—	—			FR59AP		31 (14)		**S27N11P01P**
1.5	—	—			FR67P		42 (19)		**S27N11P16P**
2	—	—			FR176P		65 (30)		**S27N11P02P**
3	—	—			FR176		55 (25)		**S27N11S03N**
5	—	—			FR177		113 (51)		**S27N11S05N**
7.5	—	—			FR178		123 (56)		**S27N11S07N**
10	—	—			FR179		193 (88)		**S27N11S10N**
15	—	—			FR180		180 (82)		**S27N11S15N**
25	—	—			FR182		375 (170)		**S27N11S25N**

240 x 480 Volts to 120/240 Volts

kVA	Full Capacity Taps FCAN	FCBN	Type	°C Temp. Rise	Frame	Wiring Diagram Number	Weight Lb (kg)	Weathershield	Catalog Number
0.050	—	—	EP	115	FR52	3A	7 (3)	Indoor–Outdoor	**S20N11S81N**
0.075	—	—			FR54		7 (3)		**S20N11S85N**
0.100	—	—			FR54		7 (3)		**S20N11S82N**
0.150	—	—			FR55		8 (4)		**S20N11S83N**
0.25	—	—			FR57P		12 (5)		**S20N11P26P**
0.5	—	—			FR57P		16 (7)		**S20N11P51P**
0.75	—	—			FR58AP		26 (12)		**S20N11P76P**
1	—	—			FR67P		31 (14)		**S20N11P01P**
1.5	—	—			FR67P		42 (19)		**S20N11P16P**
2	—	—			FR68P		42 (19)		**S20N11P02P**
3	—	—			FR176		65 (30)		**S20N11S03N**
3	②	②			FR176		65 (30)		**S20K11S03N**
5	—	—			FR177		113 (51)		**S20N11S05N**
5	②	②			FR177	9A	105 (48)		**S20K11S05N**
7.5	—	—			FR178	3A	105 (48)		**S20N11S07N**
7.5	②	②			FR178	9A	123 (56)		**S20K11S07N**
10	—	—			FR179	3A	193 (88)		**S20N11S10N**
10	②	②			FR179	9A	193 (88)		**S20K11S10N**
15	—	—			FR180	3A	216 (98)		**S20N11S15N**
15	③	③			FR180	23A	216 (98)		**S20L11S15N**
25	—	—			FR182	3A	385 (175)		**S20N11S25N**
25	③	③			FR182	23A	375 (170)		**S20L11S25N**
37.5	③	③			FR300A	248A	735 (334)		**S20L11S37** ④

Notes

① Contact Eaton for availability of 0.05–0.25 kVA designs.
② 1 at +10% FCBN at 240 volts; 2 at –5% FCBN at 480 volts.
③ 2 at +5% FCBN at 240 volts; 4 at –2.5% FCBN at 480 volts.
④ Floor-mount only.

Contact your local Eaton sales office for CE Mark transformer requirements.
For other ratings or catalog numbers not shown, or for special enclosure types (including stainless steel), refer to Eaton.
Frame drawings/dimensions information begins on **Page V2-T2-204**.

Single-Phase Encapsulated—Type EP, 60 Hz

190/200/208/220 x 380/400/416/440 Volts to 110/220 Volts 50/60 Hz—Export Model IP 22 Rated

kVA	Full Capacity Taps FCAN	FCBN	Type	°C Temp. Rise	Frame	Wiring Diagram Number	Weight Lb (kg)	Weathershield	Catalog Number
0.5	—	—	EP	115	FR67	538A	34 (15)	Indoor–Outdoor	**S40N14S51CE**
1	—	—			FR67		42 (19)		**S40N14S01CE**
1.5	—	—			FR176		46 (21)		**S40N14S16CE**
2	—	—			FR176		65 (30)		**S40N14S02CE**
3	—	—			FR177		113 (51)		**S40N14S03CE**
5	—	—			FR178		140 (64)		**S40N14S05CE**
7.5	—	—			FR179		193 (88)		**S40N14S07CE**
10	—	—			FR180		216 (98)		**S40N14S10CE**
15	—	—			FR182		375 (170)		**S40N14S15CE**

120/208/240/277 Volts to 120/240 Volts 60 Hz

kVA	Full Capacity Taps FCAN	FCBN	Type	°C Temp. Rise	Frame	Wiring Diagram Number	Weight Lb (kg)	Weathershield	Catalog Number
1	—	—	EP	115	FR67P	①	42 (19)	Indoor–Outdoor	**S54N11P01**
1.5	—	—			FR176P		65 (30)		**S54N11P16**
2	—	—			FR176P		65 (30)		**S54N11P02**
3	—	—			FR177		113 (51)		**S54N11S03**
5	—	—			FR178		140 (64)		**S54N11S05**
7.5	—	—			FR179		193 (88)		**S54N11S07**
10	—	—			FR180		216 (98)		**S54N11S10**

240 x 480 Volts to 120/240 Volts Stainless Steel ②

kVA	Full Capacity Taps FCAN	FCBN	Type	°C Temp. Rise	Frame	Wiring Diagram Number	Weight Lb (kg)	Weathershield	Catalog Number
1	—	—	EP	115	FR67P	3A	34 (15)	Indoor–Outdoor	**S20N11P01PSS**
2	—	—			FR68P		46 (21)		**S20N11P02PSS**
3	—	—			FR176		65 (30)		**S20N11S03SS**
5	—	—			FR177		113 (51)		**S20N11S05SS**
7.5	—	—			FR178		123 (56)		**S20N11S07SS**
10	—	—			FR179		193 (88)		**S20N11S10SS**
15	—	—			FR180		205 (93)		**S20N11S15SS**
25	—	—			FR182		375 (170)		**S20N11S25SS**

Notes

① Refer to your local Eaton sales office.

② NEMA 3R, 304 stainless steel enclosure; 316 stainless steel enclosure available as an option.

Contact your local Eaton sales office for CE Mark transformer requirements.
For other ratings or catalog numbers not shown, or for special enclosure types (including stainless steel), refer to Eaton.
Frame drawings/dimensions information begins on **Page V2-T2-204**.

Single-Phase Encapsulated—Type EP, 60 Hz

480 Volts to 120/240 Volts

kVA	Full Capacity Taps FCAN	FCBN	Type	°C Temp. Rise	Frame	Wiring Diagram Number	Weight Lb (kg)	Weathershield	Catalog Number
1	—	2 at –5%	EP	115	FR67P	2D	31 (14)	Indoor–Outdoor	**S48G11P01P**
1.5	—	2 at –5%			FR67P		42 (19)		**S48G11P16P**
2	—	2 at –5%			FR68P		42 (19)		**S48G11P02P**
3	—	2 at –5%			FR176		65 (30)		**S48G11S03N**
3	2 at +2.5%	2 at –2.5%			FR176	16A	65 (30)		**S48D11S03N**
5	—	2 at –5%			FR177	2D	113 (51)		**S48G11S05N**
5	2 at +2.5%	2 at –2.5%			FR177	16A	113 (51)		**S48D11S05N**
7.5	—	2 at –5%			FR178	2D	123 (56)		**S48G11S07N**
7.5	2 at +2.5%	2 at –2.5%			FR178	16A	123 (56)		**S48D11S07N**
10	—	2 at –5%			FR179	2D	193 (88)		**S48G11S10N**
10	2 at +2.5%	2 at –2.5%			FR179	16A	193 (88)		**S48D11S10N**
15	—	2 at –5%			FR180	2D	216 (98)		**S48G11S15N**
15	2 at +2.5%	2 at –2.5%			FR180	16A	216 (98)		**S48D11S15N**
25	—	2 at –5%			FR182	2D	385 (175)		**S48G11S25N**
25	2 at +2.5%	4 at –2.5%			FR132	83A	410 (186)		**S48M11S25N**

480 Volts to 120/240 Volts Stainless Steel, Copper Windings ①

kVA	Full Capacity Taps FCAN	FCBN	Type	°C Temp. Rise	Frame	Wiring Diagram Number	Weight Lb (kg)	Weathershield	Catalog Number
10	2 at +2.5%	2 at –2.5%	EP	115	FR179	16A	210 (95)	Indoor–Outdoor	**S48D11S10CUSS**
15	2 at +2.5%	2 at –2.5%			FR180		235 (107)		**S48D11S15SSCU**
25	2 at +2.5%	4 at –2.5%			FR182	83A	415 (188)		**S48M11S25SSCU**

600 Volts to 120/240 Volts

kVA	Full Capacity Taps FCAN	FCBN	Type	°C Temp. Rise	Frame	Wiring Diagram Number	Weight Lb (kg)	Weathershield	Catalog Number
0.5	—	2 at –5%	EP	115	FR57P	2I	16 (7)	Indoor–Outdoor	**S60G11P51P**
0.75	—	2 at –5%			FR58AP		26 (12)		**S60G11P76P**
1	—	2 at –5%			FR67P		31 (14)		**S60G11P01P**
1.5	—	2 at –5%			FR67P		42 (19)		**S60G11P16P**
2	—	2 at –5%			FR68P		42 (19)		**S60G11P02P**
3	—	2 at –5%			FR176		65 (30)		**S60G11S03N**
5	—	2 at –5%			FR177		105 (48)		**S60G11S05N**
7.5	—	2 at –5%			FR178		123 (56)		**S60G11S07N**
10	—	2 at –5%			FR179		193 (88)		**S60G11S10N**
15	—	4 at –2.5%			FR180	527A	216 (98)		**S60J11S15N**
25	—	4 at –2.5%			FR182		385 (175)		**S60J11S25N**
25	2 at +2.5%	4 at –2.5%			FR132	83B	395 (180)		**S60M11S25N**

Notes

① NEMA 3R, 304 stainless steel enclosure; 316 stainless steel enclosure available as an option.

Contact your local Eaton sales office for CE Mark transformer requirements.
For other ratings or catalog numbers not shown, or for special enclosure types (including stainless steel), refer to Eaton.
Frame drawings/dimensions information begins on **Page V2-T2-204**.

Single-Phase Shielded—Type EP, 60 Hz

120 x 240 Volts to 120/240 Volts

kVA	Full Capacity Taps FCAN	FCBN	Type	°C Temp. Rise	Frame	Wiring Diagram Number	Weight Lb (kg)	Weathershield	Catalog Number
3	—	—	EP	115	FR176	90B	50 (23)	Indoor–Outdoor	**S10N11E03N**
5	—	—			FR177		90 (41)		**S10N11E05N**
7.5	—	—			FR178		123 (56)		**S10N11E07N**
10	—	—			FR179		210 (95)		**S10N11E10N**
15	—	—			FR180		205 (93)		**S10N11E15N**
25	—	—			FR182		375 (170)		**S10N11E25N**

120 Volts to 120 Volts

kVA	Full Capacity Taps FCAN	FCBN	Type	°C Temp. Rise	Frame	Wiring Diagram Number	Weight Lb (kg)	Weathershield	Catalog Number
3	—	—	EP	115	FR176	77A	60 (27)	Indoor–Outdoor	**S12N12E03N**
5	—	—			FR177		100 (45)		**S12N12E05N**
7.5	—	—			FR178		123 (56)		**S12N12E07N**
10	—	—			FR179		180 (82)		**S12N12E10N**
15	—	—			FR180		216 (98)		**S12N12E15N**
25	—	—			FR182		375 (170)		**S12N12E25N**

208 Volts to 120/240 Volts

kVA	Full Capacity Taps FCAN	FCBN	Type	°C Temp. Rise	Frame	Wiring Diagram Number	Weight Lb (kg)	Weathershield	Catalog Number
3	—	—	EP	115	FR176	578A	60 (27)	Indoor–Outdoor	**S29N11E03N**
5	—	—			FR177		135 (61)		**S29N11E05N**
7.5	—	—			FR178		95 (43)		**S29N11E07N**
10	—	—			FR179		165 (75)		**S29N11E10N**
15	—	—			FR180		185 (94)		**S29N11E15N**
25	—	—			FR182		375 (170)		**S29N11E25N**

208 Volts to 208 Volts

kVA	Full Capacity Taps FCAN	FCBN	Type	°C Temp. Rise	Frame	Wiring Diagram Number	Weight Lb (kg)	Weathershield	Catalog Number
3	—	—	EP	115	FR176	77B	65 (30)	Indoor–Outdoor	**S29N29E03N**
5	—	—			FR177		113 (51)		**S29N29E05N**
7.5	—	—			FR178		123 (56)		**S29N29E07N**
10	—	—			FR179		195 (89)		**S29N29E10N**
15	—	—			FR180		216 (98)		**S29N29E15N**
25	—	—			FR182		375 (170)		**S29N29E25N**

Note

Contact your local Eaton sales office for CE Mark transformer requirements.
For other ratings or catalog numbers not shown, or for special enclosure types (including stainless steel), refer to Eaton.
Frame drawings/dimensions information begins on **Page V2-T2-204**.

Single-Phase Shielded—Type EP, 60 Hz

240 Volts to 240 Volts

kVA	Full Capacity Taps FCAN	FCBN	Type	°C Temp. Rise	Frame	Wiring Diagram Number	Weight Lb (kg)	Weathershield	Catalog Number
3	—	—	EP	115	FR176	77C	65 (30)	Indoor–Outdoor	**S24N24E03N**
5	—	—			FR177		113 (51)		**S24N24E05N**
7.5	—	—			FR178		123 (56)		**S24N24E07N**
10	—	—			FR179		193 (88)		**S24N24E10N**
15	—	—			FR180		216 (98)		**S24N24E15N**
25	—	—			FR182		375 (170)		**S24N24E25N**

277 Volts to 120/240 Volts

kVA	Full Capacity Taps FCAN	FCBN	Type	°C Temp. Rise	Frame	Wiring Diagram Number	Weight Lb (kg)	Weathershield	Catalog Number
3	—	—	EP	115	FR176	513B	65 (30)	Indoor–Outdoor	**S27N11E03N**
5	—	—			FR177		113 (51)		**S27N11E05N**
7.5	—	—			FR178		75 (34)		**S27N11E07N**
10	—	—			FR179		162 (74)		**S27N11E10N**
15	—	—			FR180		216 (98)		**S27N11E15N**
25	—	—			FR182		375 (170)		**S27N11E25N**

240 x 480 Volts to 120/240 Volts

kVA	Full Capacity Taps FCAN	FCBN	Type	°C Temp. Rise	Frame	Wiring Diagram Number	Weight Lb (kg)	Weathershield	Catalog Number
0.25	—	—	EP	115	FR57P	90A	12 (5)	Indoor–Outdoor	**S20N11E26P**
0.50	—	—			FR57P		16 (7)		**S20N11E51P**
0.75	—	—			FR58AP		26 (12)		**S20N11E76P**
1	—	—			FR67P		31 (14)		**S20N11E01P**
1.5	—	—			FR67P		42 (19)		**S20N11E16P**
2	—	—			FR68P		42 (19)		**S20N11E02P**
3	—	—			FR176		65 (30)		**S20N11E03A**
5	—	—			FR177		113 (51)		**S20N11E05A**
7.5	—	—			FR178		123 (56)		**S20N11E07A**
10	—	—			FR179		166 (75)		**S20N11E10A**
15	—	—			FR180		216 (98)		**S20N11E15A**
25	①	①			FR182	526A	375 (170)		**S20L11E25A**

Notes

① 2 at +5% FCBN at 240 volts; 4 at –2.5% FCBN at 480 volts.

Contact your local Eaton sales office for CE Mark transformer requirements.
For other ratings or catalog numbers not shown, or for special enclosure types (including stainless steel), refer to Eaton.
Frame drawings/dimensions information begins on **Page V2-T2-204**.

Three-Phase Encapsulated—Type EPT, 60 Hz

Type EPT 3–75 kVA



240 Delta Volts to 208Y/120 Volts

kVA	Full Capacity Taps FCAN	FCBN	Type	°C Temp. Rise	Frame	Wiring Diagram Number	Weight Lb (kg)	Weathershield	Catalog Number
9	—	2 at –5%	EPT	115	FR103	70C	190 (86)	Indoor–Outdoor	**Y24G28T09N** ①
15	—	2 at –5%			FR95		275 (125)		**Y24G28T15N** ①
30	2 at +2.5%	4 at –2.5%			FR243	84C	422 (191)		**Y24M28T30N**
45	2 at +2.5%	4 at –2.5%			FR244		660 (299)		**Y24M28T45N**

380 Delta Volts to 190Y/110 Volts

kVA	Full Capacity Taps FCAN	FCBN	Type	°C Temp. Rise	Frame	Wiring Diagram Number	Weight Lb (kg)	Weathershield	Catalog Number
3	—	2 at –5%	EPT	115	FR201	70F	116 (53)	Indoor–Outdoor	**Y38G19T03A** ①
6	—	2 at –5%			FR200		165 (75)		**Y38G19T06A** ①
9	—	2 at –5%			FR95		275 (125)		**Y38G19T09A** ①
15	—	2 at –5%			FR95	72R	275 (125)		**Y38G19T15A** ①
30	2 at +2.5%	4 at –2.5%			FR243	84AC	422 (191)		**Y38M19T30A**
45	2 at +2.5%	4 at –2.5%			FR244		660 (299)		**Y38M19T45A**
75	2 at +2.5%	4 at –2.5%			FR245		1275 (580)		**Y38M19T75A** ②

380 Delta Volts to 208Y/120 Volts

kVA	Full Capacity Taps FCAN	FCBN	Type	°C Temp. Rise	Frame	Wiring Diagram Number	Weight Lb (kg)	Weathershield	Catalog Number
3	—	2 at –5%	EPT	115	FR201	70D	116 (53)	Indoor–Outdoor	**Y38G28T03A** ①
6	—	2 at –5%			FR200	70F	165 (75)		**Y38G28T06A** ①
9	—	2 at –5%			FR103	70D	185 (84)		**Y38G28T09A** ①
15	—	2 at –5%			FR95		275 (125)		**Y38G28T15A** ①
30	2 at +2.5%	4 at –2.5%			FR243	84H	422 (191)		**Y38M28T30A**
45	2 at +2.5%	4 at –2.5%			FR244	84R	660 (299)		**Y38M28T45A**
75	2 at +2.5%	4 at –2.5%			FR245		1275 (580)		**Y38M28T75A** ②

Notes

① T-T (Scott T) connected.

② Floor-mount only.

Contact your local Eaton sales office for CE Mark transformer requirements.
For other ratings or catalog numbers not shown, or for special enclosure types (including stainless steel), refer to Eaton.
Frame drawings/dimensions information begins on **Page V2-T2-204**.

Three-Phase Encapsulated—Type EPT, 60 Hz

380 Delta Volts to 220Y/127 Volts

kVA	Full Capacity Taps FCAN	FCBN	Type	°C Temp. Rise	Frame	Wiring Diagram Number	Weight Lb (kg)	Weathershield	Catalog Number
3	—	2 at –5%	EPT	115	FR201	70F	116 (53)	Indoor–Outdoor	**Y38G31T03A** ①
6	—	2 at –5%			FR200		165 (75)		**Y38G31T06A** ①
9	—	2 at –5%			FR103	70M	195 (89)		**Y38G31T09A** ①
15	—	2 at –5%			FR95	70F	275 (125)		**Y38G31T15A** ①
30	2 at +2.5%	4 at –2.5%			FR243	84R	422 (191)		**Y38M31T30A**
45	2 at +2.5%	4 at –2.5%			FR244		660 (299)		**Y38M31T45A**
75	2 at +2.5%	4 at –2.5%			FR245		1275 (580)		**Y38M31T75A** ②

380 Delta Volts to 220 Delta Volts

kVA	Full Capacity Taps FCAN	FCBN	Type	°C Temp. Rise	Frame	Wiring Diagram Number	Weight Lb (kg)	Weathershield	Catalog Number
3	—	2 at –5%	EPT	115	FR201	74K	116 (53)	Indoor–Outdoor	**Y38G25T03A** ①
6	—	2 at –5%			FR200		180 (82)		**Y38G25T06A** ①
9	—	2 at –5%			FR103		195 (89)		**Y38G25T09A** ①
15	—	2 at –5%			FR95		275 (125)		**Y38G25T15A** ①
30	2 at +2.5%	4 at –2.5%			FR243	③	422 (191)		**Y38M25T30A**
45	2 at +2.5%	4 at –2.5%			FR244		660 (299)		**Y38M25T45A**
75	2 at +2.5%	4 at –2.5%			FR245	85L	1275 (580)		**Y38M25T75** ②

380 Delta Volts to 380Y/220 Volts

kVA	Full Capacity Taps FCAN	FCBN	Type	°C Temp. Rise	Frame	Wiring Diagram Number	Weight Lb (kg)	Weathershield	Catalog Number
3	—	2 at –5%	EPT	115	FR201	70D	116 (53)	Indoor–Outdoor	**Y38G37T03A** ①
6	—	2 at –5%			FR200		165 (75)		**Y38G37T06A** ①
9	—	2 at –5%			FR103		180 (82)		**Y38G37T09A** ①
15	—	2 at –5%			FR95		275 (125)		**Y38G37T15A** ①
30	2 at +2.5%	4 at –2.5%			FR243	84H	422 (191)		**Y38M37T30A**
45	2 at +2.5%	4 at –2.5%			FR244		660 (299)		**Y38M37T45A**
75	2 at +2.5%	4 at –2.5%			FR245		1275 (580)		**Y38M37T75A** ②

380 Delta Volts to 480Y/277 Volts

kVA	Full Capacity Taps FCAN	FCBN	Type	°C Temp. Rise	Frame	Wiring Diagram Number	Weight Lb (kg)	Weathershield	Catalog Number
3	—	2 at –5%	EPT	115	FR201	70F	116 (53)	Indoor–Outdoor	**Y38G47T03A** ①
6	—	2 at –5%			FR200		180 (82)		**Y38G47T06A** ①
9	—	2 at –5%			FR103		166 (75)		**Y38G47T09A** ①
15	—	2 at –5%			FR95		275 (125)		**Y38G47T15A** ①
30	2 at +2.5%	4 at –2.5%			FR243	84AB	422 (191)		**Y38M47T30A**
45	2 at +2.5%	4 at –2.5%			FR244		660 (299)		**Y38M47T45A**
75	2 at +2.5%	4 at –2.5%			FR245		1275 (580)		**Y38M47T75A** ②

Notes

① T-T (Scott T) connected.

② Floor-mount only.

③ Refer to your Eaton sales office.

Contact your local Eaton sales office for CE Mark transformer requirements.
For other ratings or catalog numbers not shown, or for special enclosure types (including stainless steel), refer to Eaton.
Frame drawings/dimensions information begins on **Page V2-T2-204**.

Three-Phase Encapsulated—Type EPT, 60 Hz

416 Delta Volts to 208Y/120 Volts

kVA	Full Capacity Taps FCAN	FCBN	Type	°C Temp. Rise	Frame	Wiring Diagram Number	Weight Lb (kg)	Weathershield	Catalog Number
3	—	2 at –5%	EPT	115	FR201	70V	116 (53)	Indoor–Outdoor	**Y43G28T03A** ①
6	—	2 at –5%			FR200		175 (79)		**Y43G28T06A** ①
9	—	2 at –5%			FR103		190 (86)		**Y43G28T09A** ①
15	—	2 at –5%			FR95		275 (125)		**Y43G28T15A** ①
30	2 at +2.5%	4 at –2.5%			FR243	84I	422 (191)		**Y43M28T30A**
45	2 at +2.5%	4 at –2.5%			FR244		660 (299)		**Y43M28T45A**
75	2 at +2.5%	4 at –2.5%			FR245		1275 (580)		**Y43M28T75A** ②

440 Delta Volts to 220Y/127 Volts

kVA	Full Capacity Taps FCAN	FCBN	Type	°C Temp. Rise	Frame	Wiring Diagram Number	Weight Lb (kg)	Weathershield	Catalog Number
3	—	2 at –5%	EPT	115	FR201	70G	116 (53)	Indoor–Outdoor	**Y44G31T03A** ①
6	—	2 at –5%			FR200		165 (75)		**Y44G31T06A** ①
9	—	2 at –5%			FR103		166 (75)		**Y44G31T09A** ①
15	—	2 at –5%			FR95		275 (125)		**Y44G31T15A** ①
30	2 at +2.5%	4 at –2.5%			FR243	84O	422 (191)		**Y44M31T30A** ②
45	2 at +2.5%	4 at –2.5%			FR244		660 (299)		**Y44M31T45A**
75	2 at +2.5%	4 at –2.5%			FR245		1275 (580)		**Y44M31T75A** ②

480 Delta Volts to 208Y/120 Volts

kVA	Full Capacity Taps FCAN	FCBN	Type	°C Temp. Rise	Frame	Wiring Diagram Number	Weight Lb (kg)	Weathershield	Catalog Number
3	—	2 at –5%	EPT	115	FR201	70A	116 (52)	Indoor–Outdoor	**Y48G28T03N** ①
6	—	2 at –5%			FR200		165 (75)		**Y48G28T06N** ①
6	2 at +2.5%	2 at –2.5%			FR200	72B	165 (75)		**Y48D28T06N** ①
9	—	2 at –5%			FR103	70A	166 (75)		**Y48G28T09N** ①
9	—	4 at –2.5%			FR103	503A	185 (84)		**Y48J28T09N** ①
9	2 at +2.5%	2 at –2.5%			FR103	72B	185 (84)		**Y48D28T09N** ①
15	—	2 at –5%			FR95	70A	275 (125)		**Y48G28T15N** ①
15	—	4 at –2.5%			FR95	503A	275 (125)		**Y48J28T15N** ①
15	2 at +2.5%	2 at –2.5%			FR95	72B	275 (125)		**Y48D28T15N** ①
30	2 at +2.5%	4 at –2.5%			FR243	84A	422 (191)		**Y48M28T30N**
45	2 at +2.5%	4 at –2.5%			FR244		720 (327)		**Y48M28T45N**
75	2 at +2.5%	4 at –2.5%			FR245		1275 (580)		**Y48M28T75N** ②

480 Delta Volts to 208Y/120 Volts—Copper Windings

kVA	Full Capacity Taps FCAN	FCBN	Type	°C Temp. Rise	Frame	Wiring Diagram Number	Weight Lb (kg)	Weathershield	Catalog Number
15	2 at +2.5%	2 at –2.5%	EPT	115	FR95	72B	300 (136)	Indoor–Outdoor	**Y48D28T15CU** ①
30	2 at +2.5%	4 at –2.5%			FR243	84A	505 (230)		**Y48M28T30CU**
45	2 at +2.5%	4 at –2.5%			FR244		810 (368)		**Y48M28T45CU**
75	2 at +2.5%	4 at –2.5%			FR245		1450 (659)		**Y48M28T75CU** ②③

Notes

① T-T (Scott T) connected.

② Floor-mount only.

③ Not CSA certified.

Contact your local Eaton sales office for CE Mark transformer requirements.
For other ratings or catalog numbers not shown, or for special enclosure types (including stainless steel), refer to Eaton.
Frame drawings/dimensions information begins on **Page V2-T2-204**.

Three-Phase Encapsulated—Type EPT, 60 Hz

480 Delta Volts to 208Y/120 Volts Stainless Steel ①

kVA	Full Capacity Taps FCAN	FCBN	Type	°C Temp. Rise	Frame	Wiring Diagram Number	Weight Lb (kg)	Weathershield	Catalog Number
3	—	2 at –5%	EPT	115	FR201	70A	116 (53)	Indoor–Outdoor	**Y48G28T03SS** ②
6	2 at +2.5%	2 at –2.5%			FR200	72B	175 (79)		**Y48D28T06SS** ②
9	2 at +2.5%	2 at –2.5%			FR103		185 (84)		**Y48D28T09SS** ②
15	2 at +2.5%	2 at –2.5%			FR95		275 (125)		**Y48D28T15SS** ②
30	2 at +2.5%	4 at –2.5%			FR243	84A	422 (191)		**Y48M28T30SS**
45	2 at +2.5%	4 at –2.5%			FR244		660 (299)		**Y48M28T45SS**
75	2 at +2.5%	4 at –2.5%			FR245		1275 (580)		**Y48M28T75SS** ③

480 Delta Volts to 208Y/120 Volts Stainless Steel—Copper Windings ①

kVA	Full Capacity Taps FCAN	FCBN	Type	°C Temp. Rise	Frame	Wiring Diagram Number	Weight Lb (kg)	Weathershield	Catalog Number
15	2 at +2.5%	2 at –2.5%	EPT	115	FR95	72B	275 (125)	Indoor–Outdoor	**Y48D28T15CUSS** ②
30	2 at +2.5%	4 at –2.5%			FR243	84A	504 (229)		**Y48M28T30CUSS**
45	2 at +2.5%	4 at –2.5%			FR244		810 (368)		**Y48M28T45CUSS**

480 Delta Volts to 220Y/127 Volts

kVA	Full Capacity Taps FCAN	FCBN	Type	°C Temp. Rise	Frame	Wiring Diagram Number	Weight Lb (kg)	Weathershield	Catalog Number
3	—	2 at –5%	EPT	115	FR201	70K	116 (53)	Indoor–Outdoor	**Y48G31T03A** ②
6	—	2 at –5%			FR200		175 (79)		**Y48G31T06A** ②
9	—	2 at –5%			FR103	70A	185 (84)		**Y48G31T09A** ②
15	—	2 at –5%			FR95		275 (125)		**Y48G31T15A** ②
30	2 at +2.5%	4 at –2.5%			FR243	84A	422 (191)		**Y48M31T30A**
45	2 at +2.5%	4 at –2.5%			FR244		660 (299)		**Y48M31T45A**
75	2 at +2.5%	4 at –2.5%			FR245	84K	1275 (580)		**Y48M31T75A** ③

480 Delta Volts to 240 Delta Volts

kVA	Full Capacity Taps FCAN	FCBN	Type	°C Temp. Rise	Frame	Wiring Diagram Number	Weight Lb (kg)	Weathershield	Catalog Number
3	—	2 at –5%	EPT	115	FR201	74A	116 (52)	Indoor–Outdoor	**Y48G24T03N** ②④
6	—	2 at –5%			FR200		165 (75)		**Y48G24T06N** ②④
9	—	4 at –2.5%			FR103	73A	185 (84)		**Y48J24T09N** ②④
15	—	4 at –2.5%			FR95		275 (125)		**Y48J24T15N** ②④
30	2 at +2.5%	4 at –2.5%			FR243	85A	422 (191)		**Y48M24T30N** ④
45	2 at +2.5%	4 at –2.5%			FR244		660 (299)		**Y48M24T45N** ④

Notes

① NEMA 3R, 304 stainless steel enclosure; 316 stainless steel enclosure available.
② T-T (Scott T) connected.
③ Floor-mount only.
④ Do not include 120 volt lighting tap.

Contact your local Eaton sales office for CE Mark transformer requirements.
For other ratings or catalog numbers not shown, or for special enclosure types (including stainless steel), refer to Eaton.
Frame drawings/dimensions information begins on **Page V2-T2-204**.

Three-Phase Encapsulated—Type EPT, 60 Hz

480 Delta Volts to 380Y/220 Volts

kVA	Full Capacity Taps FCAN	FCBN	Type	°C Temp. Rise	Frame	Wiring Diagram Number	Weight Lb (kg)	Weathershield	Catalog Number
3	—	2 at –5%	EPT	115	FR201	70A	116 (53)	Indoor–Outdoor	**Y48G37T03A** ①
6	—	2 at –5%			FR200	70R	165 (75)		**Y48G37T06A** ①
9	—	2 at –5%			FR103		185 (84)		**Y48G37T09A** ①
15	—	2 at –5%			FR95		275 (125)		**Y48G37T15A** ①
30	2 at +2.5%	4 at –2.5%			FR243	84A	422 (191)		**Y48M37T30A**
45	2 at +2.5%	4 at –2.5%			FR244		660 (299)		**Y48M37T45A**
75	2 at +2.5%	4 at –2.5%			FR245		1275 (580)		**Y48M37T75A** ②

480 Delta Volts to 380 Delta Volts

kVA	Full Capacity Taps FCAN	FCBN	Type	°C Temp. Rise	Frame	Wiring Diagram Number	Weight Lb (kg)	Weathershield	Catalog Number
3	—	2 at –5%	EPT	115	FR201	74B	116 (53)	Indoor–Outdoor	**Y48G38T03A** ①
6	—	2 at –5%			FR200		165 (75)		**Y48G38T06A** ①
9	—	2 at –5%			FR103		185 (84)		**Y48G38T09A** ①
15	—	2 at –5%			FR95	74A	275 (125)		**Y48G38T15A** ①
30	2 at +2.5%	4 at –2.5%			FR243	85A	422 (191)		**Y48M38T30A**
45	2 at +2.5%	4 at –2.5%			FR244		660 (299)		**Y48M38T45A**
75	2 at +2.5%	4 at –2.5%			FR245		1297 (593)		**Y48M38T75** ②

480 Delta Volts to 416Y/240 Volts

kVA	Full Capacity Taps FCAN	FCBN	Type	°C Temp. Rise	Frame	Wiring Diagram Number	Weight Lb (kg)	Weathershield	Catalog Number
3	—	2 at –5%	EPT	115	FR200	70A	165 (75)	Indoor–Outdoor	**Y48G51T03A** ①
6	—	2 at –5%			FR200		185 (84)		**Y48G51T06A** ①
9	—	2 at –5%			FR103	70S	185 (84)		**Y48G51T09A** ①
15	—	2 at –5%			FR95		275 (125)		**Y48G51T15A** ①
30	2 at +2.5%	4 at –2.5%			FR243	84A	422 (191)		**Y48M51T30A**
45	2 at +2.5%	4 at –2.5%			FR244		660 (299)		**Y48M51T45A**
75	2 at +2.5%	4 at –2.5%			FR245		1275 (580)		**Y48M51T75A** ②

480 Delta Volts to 440Y/254 Volts

kVA	Full Capacity Taps FCAN	FCBN	Type	°C Temp. Rise	Frame	Wiring Diagram Number	Weight Lb (kg)	Weathershield	Catalog Number
3	—	2 at –5%	EPT	115	FR201	70A	116 (53)	Indoor–Outdoor	**Y48G35T03A** ①
6	—	2 at –5%			FR200		185 (84)		**Y48G35T06A** ①
9	—	2 at –5%			FR103		185 (84)		**Y48G35T09A** ①
15	—	2 at –5%			FR95		275 (125)		**Y48G35T15A** ①
30	2 at +2.5%	4 at –2.5%			FR243	84A	422 (191)		**Y48M35T30A**
45	2 at +2.5%	4 at –2.5%			FR244		660 (299)		**Y48M35T45A**
75	2 at +2.5%	4 at –2.5%			FR245		1275 (580)		**Y48M35T75A** ②

Notes

① T-T (Scott T) connected.

② Floor-mount only.

Contact your local Eaton sales office for CE Mark transformer requirements.
For other ratings or catalog numbers not shown, or for special enclosure types (including stainless steel), refer to Eaton.
Frame drawings/dimensions information begins on **Page V2-T2-204**.

Three-Phase Encapsulated—Type EPT, 60 Hz

480 Delta Volts to 480Y/277 Volts

kVA	Full Capacity Taps FCAN	FCBN	Type	°C Temp. Rise	Frame	Wiring Diagram Number	Weight Lb (kg)	Weathershield	Catalog Number
9	2 at +2.5%	2 at –2.5%	EPT	115	FR103	72C	190 (86)	Indoor–Outdoor	**Y48D47T09N** ①
15	2 at +2.5%	2 at –2.5%			FR95		275 (125)		**Y48D47T15N** ①
30	2 at +2.5%	4 at –2.5%			FR243	84A	422 (191)		**Y48M47T30N**
45	2 at +2.5%	4 at –2.5%			FR244		660 (299)		**Y48M47T45N**

600 Delta Volts to 208Y/120 Volts

kVA	Full Capacity Taps FCAN	FCBN	Type	°C Temp. Rise	Frame	Wiring Diagram Number	Weight Lb (kg)	Weathershield	Catalog Number
9	—	2 at –5%	EPT	115	FR103	70B	185 (84)	Indoor–Outdoor	**Y60G28T09N** ①
15	—	2 at –5%			FR95		275 (125)		**Y60G28T15N** ①
30	2 at +2.5%	4 at –2.5%			FR243	84B	422 (191)		**Y60M28T30N**
45	2 at +2.5%	4 at –2.5%			FR244		660 (299)		**Y60M28T45N**

Three-Phase Shielded—Type EPT, 60 Hz

480 Delta Volts to 208Y/120 Volts

kVA	Full Capacity Taps FCAN	FCBN	Type	°C Temp. Rise	Frame	Wiring Diagram Number	Weight Lb (kg)	Weathershield	Catalog Number
3	2 at +2.5%	2 at –2.5%	EPT	115	FR201	86B	116 (52)	Indoor–Outdoor	**Y48D28E03A** ①
6	2 at +2.5%	2 at –2.5%			FR200		165 (75)		**Y48D28E06A** ①
9	2 at +2.5%	2 at –2.5%			FR103		190 (86)		**Y48D28E09N** ①
15	2 at +2.5%	2 at –2.5%			FR95		275 (125)		**Y48D28E15B** ①

480 Delta Volts to 240 Delta Volts

kVA	Full Capacity Taps FCAN	FCBN	Type	°C Temp. Rise	Frame	Wiring Diagram Number	Weight Lb (kg)	Weathershield	Catalog Number
3	—	2 at –5%	EPT	115	FR201	88A	116 (52)	Indoor–Outdoor	**Y48G24E03A** ①
6	—	2 at –5%			FR200		165 (75)		**Y48G24E06A** ①
9	—	4 at –2.5%			FR103	505B	195 (89)		**Y48J24E09A** ①
15	—	4 at –2.5%			FR95		275 (125)		**Y48J24E15A** ①

Notes

① T-T (Scott T) connected.

Contact your local Eaton sales office for CE Mark transformer requirements.
For other ratings or catalog numbers not shown, or for special enclosure types (including stainless steel), refer to Eaton.
Frame drawings/dimensions information begins on **Page V2-T2-204**.

NEMA Type 4X Single-Phase Encapsulated—Type EP, 60 Hz, Grade 304 Stainless Steel ①

240 x 480 Volts to 120/240 Volts—Aluminum Windings

kVA	Full Capacity Taps FCAN	FCBN	Type	°C Temp. Rise	Frame	Wiring Diagram Number	Weight Lb (kg)	Weathershield	Catalog Number
0.100 ②	—	—	EP	115	FR544X	3A	7 (3)	Indoor–Outdoor	**S20N11S82SS4X**
0.015 ②	—	—			FR554X		9 (4)		**S20N11S83SS4X**
0.250 ②	—	—			FR57P4X		15 (7)		**S20N11P26SS4X**
0.500 ②	—	—			FR57P4X		14 (6)		**S20N11P51SS4X**
0.750 ②	—	—			FR58AP4X		22 (10)		**S20N11P76SS4X**
1 ②	—	—			FR67P4X		30 (14)		**S20N11P01SS4X**
1.5 ②	—	—			FR67P4X		41 (19)		**S20N11P16SS4X**
2 ②	—	—			FR68P4X		75 (34)		**S20N11P02SS4X**
3	—	—			FR1764X		68 (31)		**S20N11S03SS4X**
3	③	③			FR1764X	9A	67 (30)		**S20K11S03SS4X**
5	—	—			FR1774X	3A	107 (49)		**S20N11S05SS4X**
5	③	③			FR1774X	9A	105 (48)		**S20K11S05SS4X**
7.5	—	—			FR1784X	3A	129 (58)		**S20N11S07SS4X**
7.5	③	③			FR1784X	9A	130 (59)		**S20K11S07SS4X**
10	—	—			FR1794X	3A	196 (89)		**S20N11S10SS4X**
10	③	③			FR1794X	9A	198 (90)		**S20K11S10SS4X**
15	—	—			FR1804X	3A	215 (98)		**S20N11S15SS4X**
15	③	③			FR1804X	23A	215 (98)		**S20L11S15SS4X**
25	—	—			FR1824X	3A	393 (178)		**S20N11S25SS4X**
25	④	④			FR1824X	23A	453 (206)		**S20L11S25SS4X**
37.5	④	④			FR300A4X	248A	735 (334)		**S20L11S37SS4X** ⑤

Notes

① Grade 304 stainless steel standard. Grade 316 stainless steel available as an option. Replace suffix "SS" with suffix "S6."
② Copper windings provided as standard.
③ 1 at +10% FCBN at 240 volts; 2 at –5% FCBN at 480 volts.
④ 2 at +5% FCBN at 240 volts; 4 at –2.5% FCBN at 480 volts.
⑤ Floor-mount only.

Contact your local Eaton sales office for voltage combinations not shown in the above table.
Other voltages and custom features are available upon request.

NEMA Type 4X Single-Phase Encapsulated—Type EP, 60 Hz, Grade 304 Stainless Steel ①

240 x 480 Volts to 120/240 Volts—Copper Windings

kVA	Full Capacity Taps FCAN	FCBN	Type	°C Temp. Rise	Frame	Wiring Diagram Number	Weight Lb (kg)	Weathershield	Catalog Number
0.100 ②	—	—	EP	115	FR544X	3A	7 (3)	Indoor–Outdoor	**S20N11S82SS4X**
0.015 ②	—	—			FR554X		9 (4)		**S20N11S83SS4X**
0.250 ②	—	—			FR57P4X		15 (7)		**S20N11P26SS4X**
0.500 ②	—	—			FR57P4X		14 (6)		**S20N11P51SS4X**
0.750 ②	—	—			FR58AP4X		22 (10)		**S20N11P76SS4X**
1 ②	—	—			FR67P4X		30 (14)		**S20N11P01SS4X**
1.5 ②	—	—			FR67P4X		36 (16)		**S20N11P16SS4X**
2 ②	—	—			FR68P4X		41 (19)		**S20N11P02SS4X**
3	—	—			FR1764X		76 (34)		**S20N11S03CUSS4X**
3	③	③			FR1764X	9A	77 (35)		**S20K11S03CUSS4X**
5	—	—			FR1774X	3A	135 (61)		**S20N11S05CUSS4X**
5	③	③			FR1774X	9A	121 (55)		**S20K11S05CUSS4X**
7.5	—	—			FR1784X	3A	144 (65)		**S20N11S07CUSS4X**
7.5	③	③			FR1784X	9A	146 (66)		**S20K11S07CUSS4X**
10	—	—			FR1794X	3A	229 (104)		**S20N11S10CUSS4X**
10	③	③			FR1794X	9A	219 (99)		**S20K11S10CUSS4X**
15	—	—			FR1804X	3A	236 (107)		**S20N11S15CUSS4X**
15	③	③			FR1804X	23A	236 (107)		**S20L11S15CUSS4X**
25	—	—			FR300A4X	3A	388 (176)		**S20N11S25CUSS4X**
25	④	④			FR300A4X	23A	388 (176)		**S20L11S25CUSS4X**
37.5	④	④			FR300A4X	248A	775 (352)		**S20L11S37CUSS4X** ⑤

Notes

① Grade 304 stainless steel standard. Grade 316 stainless steel available as an option. Replace suffix "SS" with suffix "S6."
② Copper windings provided as standard.
③ 1 at +10% FCBN at 240 volts; 2 at –5% FCBN at 480 volts.
④ 2 at +5% FCBN at 240 volts; 4 at –2.5% FCBN at 480 volts.
⑤ Floor-mount only.

Contact your local Eaton sales office for voltage combinations not shown in the above table.
Other voltages and custom features are available upon request.

NEMA Type 4X Three-Phase Encapsulated—Type EPT, 60 Hz, Grade 304 Stainless Steel ①

2

480 Delta Volts to 208Y/120 Volts—Aluminum Windings

kVA	Full Capacity Taps FCAN	FCBN	Type	°C Temp. Rise	Frame	Wiring Diagram Number	Weight Lb (kg)	Weathershield	Catalog Number
3	—	2 at –5%	EPT	115	FR2014X	70A	125 (57)	Indoor–Outdoor	**Y48G28T03SS4X** ②
6	—	2 at –5%			FR2004X		165 (75)		**Y48G28T06SS4X** ②
6	2 at +2.5%	2 at –2.5%			FR2004X	72B	171 (78)		**Y48D28T06SS4X** ②
9	—	2 at –5%			FR1034X	70A	180 (82)		**Y48G28T09SS4X** ②
9	—	4 at –2.5%			FR1034X	503A	192 (87)		**Y48J28T09SS4X** ②
9	2 at +2.5%	2 at –2.5%			FR1034X	72B	196 (89)		**Y48D28T09SS4X** ②
15	2 at +2.5%	2 at –2.5%			FR954X		281 (127)		**Y48D28T15SS4X** ②
15	—	2 at –5%			FR954X	70A	269 (122)		**Y48G28T15SS4X** ②
15	—	4 at –2.5%			FR954X	503A	268 (121)		**Y48J28T15SS4X** ②
30	2 at +2.5%	4 at –2.5%			FR2434X	84A	539 (245)		**Y48M28T30SS4X**
45	2 at +2.5%	4 at –2.5%			FR2444X		723 (328)		**Y48M28T45SS4X**
75	2 at +2.5%	4 at –2.5%			FR2454X		1277 (580)		**Y48M28T75SS4X** ③

480 Delta Volts to 208Y/120 Volts—Copper Windings

kVA	Full Capacity Taps FCAN	FCBN	Type	°C Temp. Rise	Frame	Wiring Diagram Number	Weight Lb (kg)	Weathershield	Catalog Number
3	—	2 at –5%	EPT	115	FR2014X	70A	139 (63)	Indoor–Outdoor	**Y48G28T03CUSS4X** ②
6	—	2 at –5%			FR2004X		187 (84)		**Y48G28T06CUSS4X** ②
6	2 at +2.5%	2 at –2.5%			FR2004X	72B	188 (85)		**Y48D28T06CUSS4X** ②
9	—	2 at –5%			FR1034X	70A	226 (103)		**Y48G28T09CUSS4X** ②
9	—	4 at –2.5%			FR1034X	503A	226 (103)		**Y48J28T09CUSS4X** ②
9	2 at +2.5%	2 at –2.5%			FR1034X	72B	231 (105)		**Y48D28T09CUSS4X** ②
15	2 at +2.5%	2 at –2.5%			FR954X		276 (125)		**Y48D28T15CUSS4X** ②
15	—	2 at –5%			FR954X	70A	283 (128)		**Y48G28T15CUSS4X** ②
15	—	4 at –2.5%			FR954X	503A	299 (136)		**Y48J28T15CUSS4X** ②
30	2 at +2.5%	4 at –2.5%			FR2434X	84A	602 (273)		**Y48M28T30CUSS4X**
45	2 at +2.5%	4 at –2.5%			FR2444X		829 (376)		**Y48M28T45CUSS4X**
75	2 at +2.5%	4 at –2.5%			FR2454X		1452 (659)		**Y48M28T75CUSS4X** ③

Notes

① Grade 304 stainless steel standard. Grade 316 stainless steel available as an option. Replace suffix "SS" with suffix "S6."

② T-T (Scott T) connected.

③ Floor-mount only.

Contact your local Eaton sales office for voltage combinations not shown in the above table.
Other voltages and custom features are available upon request.

Accessories

Please refer to Section 2.7 **Page V2-T2-167**.

Technical Data and Specifications

Frequency

Eaton standard dry-type distribution transformers are designed for 60 Hz operation. Transformers required for other frequencies are available and must be specifically designed.

Overload Capability

Short-term overload is designed into transformers as required by ANSI. Dry-type distribution transformers will deliver 200% nameplate load for one-half hour, 150% load for one hour and 125% load for four hours without being damaged, provided that a constant 50% load precedes and follows the overload. See ANSI C57.96-01.250 for additional limitations.

Continuous overload capacity is not deliberately designed into a transformer because the design objective is to be within the allowed winding temperature rise with nameplate loading.

Insulation System and Temperature Rise

Industry standards classify insulation systems and rise as shown below:

Insulation System Classification

Ambient	+ Winding Rise	+ Hot Spot	= Temp. Class
40°C	55°C	10°C	105°C
40°C	80°C	30°C	150°C
25°C	135°C	20°C	180°C
40°C	115°C	30°C	185°C
40°C	150°C	30°C	220°C

The design life of transformers having different insulation systems is the same—the lower-temperature systems are designed for the same life as the higher-temperature systems.

Enclosures

Eaton encapsulated transformers, Types EP and EPT, use a NEMA 3R rated enclosure as standard. NEMA 4X enclosures (grade 304 or 316 stainless steel) are available as an option.

Winding Terminations

Primary and secondary windings are terminated in the wiring compartment. Encapsulated units have copper leads or stabs brought out for connections. Eaton recommends that external cables be rated 90°C (sized at 75°C ampacity) for encapsulated designs.

Series-Multiple Windings

Series-multiple windings consist of two similar coils in each winding that can be connected in series or parallel (multiple). Transformers with series-multiple windings are designated with an "x" or "/" between the voltage ratings, such as voltages of "120/240" or "240 x 480." If the series-multiple winding is designated by an "x," the winding can be connected only for a series or parallel. With the "/" designation, a mid-point also becomes available in addition to the series or parallel connection. As an example, a 120 x 240 winding can be connected for either 120 (parallel) or 240 (series), but a 120/240 winding can be connected for 120 (parallel), 240 (series) or 240 with a 120 mid-point.

Sound Levels

All Eaton 600 volt class general-purpose dry-type distribution transformers are designed to meet NEMA ST-20 sound levels listed here. These are the sound levels measured in a soundproof environment. Actual sound levels measured at an installation will likely be higher due to electrical connections and environmental conditions.

Lower sound levels are available and should be specified when the transformer is going to be installed in an area where sound may be a concern.

For additional information, please refer to Section 2.7 **Page V2-T2-171**.

Average Sound Levels

NEMA ST-20 Average Sound Level, dB

Equivalent Winding kVA Range	Self-Cooled Ventilated (up to 1.2 kV) K-Factor 1, 4, 9	Self-Cooled Ventilated (up to 1.2 kV) K-Factor 13, 20	Encapsulated (up to 1.2 kV)
3.00 and below	40	40	45
3.01 to 9.00	40	40	45
9.01 to 15.00	45	45	50
15.01 to 30.00	45	45	50
30.01 to 50.00	45	48	50
50.01 to 75.00	50	53	55
75.01 to 112.50	50	53	55
112.51 to 150.00	50	53	55
150.01 to 225.00	55	58	57
225.01 to 300.00	55	58	57
300.01 to 500.00	60	63	59
500.01 to 700.00	62	65	61
700.01 to 1000.00	64	67	63
Greater than 1000	Consult factory	Consult factory	Consult factory

Note

For other ratings or catalog numbers not shown, or for special enclosure types (including stainless steel), refer to Eaton.

Distribution Transformers



2

Contents

Description	*Page*
Distribution Transformers	
Motor Drive Isolation Transformers	**V2-T2-97**
Mini–Power Centers	**V2-T2-105**
Totally Enclosed Non-Ventilated Transformers	**V2-T2-109**
Class I, Division 2, Hazardous Location Transformers	**V2-T2-112**
Marine Duty Transformers	**V2-T2-115**
Buck-Boost and Low-Voltage Lighting Transformers	**V2-T2-120**
Medium-Voltage Dry-Type Distribution Transformers	**V2-T2-149**

Type MD



Contents

Description	*Page*
Motor Drive Isolation Transformers	
Catalog Number Selection	**V2-T2-98**
Product Selection	**V2-T2-98**
Accessories	**V2-T2-104**
Technical Data and Specifications	**V2-T2-104**
Mini–Power Centers	**V2-T2-105**
Totally Enclosed Non-Ventilated Transformers	**V2-T2-109**
Class I, Division 2, Hazardous Location Transformers	**V2-T2-112**
Marine Duty Transformers	**V2-T2-115**
Buck-Boost and Low-Voltage Lighting Transformers	**V2-T2-120**
Medium-Voltage Dry-Type Distribution Transformers	**V2-T2-149**

Motor Drive Isolation Transformers

Product Description

Note: The following pages provide listings for most standard transformer ratings and catalog numbers. For other ratings or catalog numbers not shown, or for special enclosure types (including stainless steel), refer to Eaton.

- Suitable for indoor or outdoor applications (with weathershield)
- Ventilated enclosures
- 220°C insulation system
- 150°C rise standard (self extinguishing), 115°C or 80°C rise optional
- Available in ratings from 7.5 through 1500 kVA
- Motor drive isolation transformers are specifically excluded from the scope of U.S. DOE energy efficiency requirements

Application Description

Drive isolation transformers are specifically designed for use with AC and DC adjustable speed drives. Two winding drive isolation transformers provide:

- Electrical isolation between the incoming line and the drive circuitry
- Voltage conversion of input line to standard drive input voltages
- Minimized line disturbances caused by SCR (silicon controlled rectifiers) firing
- Reduced short-circuit currents and voltage line transients

Drive isolation transformers are specifically sized to the drive kVA requirements and are braced to withstand the mechanical stresses of current reversals and short circuits associated with SCR drives.

Features, Benefits and Functions

- 60 Hz operation (50/60 Hz operation available)
- Short-term overload capability as required by ANSI
- Primary and secondary terminals are front accessible for fast and easy connection
- Slotted screw mounting holes in enclosure and cover reduce installation time
- Sound dampening pads, which isolate the core and coil from the case, reduce noise levels to meet NEMA ST-20
- Core laminations of precision sheared silicon steel are hand stacked to ensure quiet operation
- Terminations are clearly marked for easy identification
- Three-phase transformers have one 5% full capacity tap above and below nominal voltage for incoming source adjustment
- Units are suitable for continuous operation in a 40°C ambient maximum
- Full current neutral
- Thermoguard protection embedded in coils of three-phase models to indicate that high temperatures (approximately 190°C) are present. Thermoguards consist of a set of NC dry contacts
- Three coil delta-wye configurations are used throughout the product line

Standards and Certifications

- ANSI C89.2
- NEMA ST-20
- UL 506
- UL 1561

UL Listed

Seismic Qualified

All Eaton manufactured dry-type distribution transformers are seismically qualified and exceed requirements of the International Building Code (IBC) and California Code Title 24.

Catalog Number Selection

Please refer to Section 2.7 **Page V2-T2-162**.

2

Product Selection

Additional Product Selection information begins on **Page V2-T2-165**.

Three-Phase Drive Isolation

208 Delta Volts to 460Y/266 Volts

hp	kVA	Full Capacity Taps FCAN	Full Capacity Taps FCBN	°C Temp. Rise	Frame	Wiring Diagram Number	Weight Lb (kg)	Weathershield	Catalog Number
5	7.5	1 at +5%	1 at –5%	150	FR912D	347B	158 (72)	**WS38**	**MD075E86**
7.5	11				FR912D		176 (80)	**WS38**	**MD11E86**
10	14				FR912D		149 (68)	**WS38**	**MD14E86**
15	20				FR912D		240 (19)	**WS38**	**MD20E86**
20	27				FR912D		231 (15)	**WS38**	**MD27E86**
25	34				FR912D		310 (141)	**WS38**	**MD34E86**
30	40				FR912D		307 (139)	**WS38**	**MD40E86**
40	51				FR914D		480 (218)	**WS39**	**MD51E86**
50	63				FR914D		485 (220)	**WS39**	**MD63E86**
60	75				FR914D		482 (219)	**WS39**	**MD75E86**
75	93				FR915D		600 (272)	**WS39**	**MD93E86**
100	118				FR916A		658 (299)	**WS19**	**MD118E86**
125	145				FR916A		770 (350)	**WS19**	**MD145E86**
150	175				FR918A	321B	1320 (599)	**WS34**	**MD175E86**
200	220				FR918A		1436 (652)	**WS34**	**MD220E86**
250	275				FR918A		①	**WS34**	**MD275E86**
300	330				FR919E		①	**WS35**	**MD330E86**
400	440				FR920E		①	**WS35**	**MD440E86**

Notes

① Contact Eaton.

For other ratings or catalog numbers not shown, or for special enclosure types (including stainless steel), refer to Eaton.
Frame drawings/dimensions information begins on **Page V2-T2-204**.

Three-Phase Drive Isolation

230 Delta Volts to 230Y/133 Volts

hp	kVA	Full Capacity Taps FCAN	FCBN	°C Temp. Rise	Frame	Wiring Diagram Number	Weight Lb (kg)	Weathershield	Catalog Number
5	7.5	1 at +5%	1 at –5%	150	FR912D	286A	158 (72)	**WS38**	**MD075E88**
7.5	11				FR912D		156 (71)	**WS38**	**MD11E88**
10	14				FR912D		158 (72)	**WS38**	**MD14E88**
15	20				FR912D		216 (98)	**WS38**	**MD20E88**
20	27				FR912D		231 (105)	**WS38**	**MD27E88**
25	34				FR912D		310 (141)	**WS38**	**MD34E88**
30	40				FR912D		310 (141)	**WS38**	**MD40E88**
40	51				FR914D		480 (218)	**WS39**	**MD51E88**
50	63				FR914D		500 (227)	**WS39**	**MD63E88**
60	75				FR914D		538 (244)	**WS39**	**MD75E88**
75	93				FR915D		600 (272)	**WS39**	**MD93E88**
100	118				FR915D		600 (272)	**WS39**	**MD118E88**
125	145				FR916A		868 (394)	**WS19**	**MD145E88**
150	175				FR918A	318D	1320 (599)	**WS34**	**MD175E88**
200	220				FR918A		1332 (605)	**WS34**	**MD220E88**
250	275				FR918A		1350 (613)	**WS34**	**MD275E88**
300	330				FR919E		2336 (1061)	**WS35**	**MD330E88**
400	440				FR920E		①	**WS35**	**MD440E88**

230 Delta Volts to 460Y/266 Volts

hp	kVA	Full Capacity Taps FCAN	FCBN	°C Temp. Rise	Frame	Wiring Diagram Number	Weight Lb (kg)	Weathershield	Catalog Number
5	7.5	1 at +5%	1 at –5%	150	FR912D	347A	158 (72)	**WS38**	**MD075E89**
7.5	11				FR912D		158 (72)	**WS38**	**MD11E89**
10	14				FR912D		158 (72)	**WS38**	**MD14E89**
15	20				FR912D		254 (115)	**WS38**	**MD20E89**
20	27				FR912D		231 (105)	**WS38**	**MD27E89**
25	34				FR912D		310 (141)	**WS38**	**MD34E89**
30	40				FR912D		344 (156)	**WS38**	**MD40E89**
40	51				FR914D		480 (218)	**WS39**	**MD51E89**
50	63				FR914D		457 (207)	**WS39**	**MD63E89**
60	75				FR914D		480 (218)	**WS39**	**MD75E89**
75	93				FR915D		600 (272)	**WS39**	**MD93E89**
100	118				FR916A		941 (427)	**WS19**	**MD118E89**
125	145				FR916A		770 (350)	**WS19**	**MD145E89**
150	175				FR918A	321A	1326 (602)	**WS34**	**MD175E89**
200	220				FR918A		1332 (605)	**WS34**	**MD220E89**
250	275				FR918A		1350 (613)	**WS34**	**MD275E89**
300	330				FR919E		2400 (1090)	**WS35**	**MD330E89**
400	440				FR920E		①	**WS35**	**MD440E89**

Notes

① Contact Eaton.

For other ratings or catalog numbers not shown, or for special enclosure types (including stainless steel), refer to Eaton.
Frame drawings/dimensions information begins on **Page V2-T2-204**.

2

Three-Phase Drive Isolation

460 Delta Volts to 230Y/133 Volts

hp	kVA	Full Capacity Taps FCAN	FCBN	°C Temp. Rise	Frame	Wiring Diagram Number	Weight Lb (kg)	Weathershield	Catalog Number
5	7.5	1 at +5%	1 at –5%	150	FR912D	286D	193 (88)	**WS38**	**MD075E91**
7.5	11				FR912D		158 (72)	**WS38**	**MD11E91**
10	14				FR912D		158 (72)	**WS38**	**MD14E91**
15	20				FR912D		216 (98)	**WS38**	**MD20E91**
20	27				FR912D		231 (105)	**WS38**	**MD27E91**
25	34				FR912D		340 (154)	**WS38**	**MD34E91**
30	40				FR912D		339 (154)	**WS38**	**MD40E91**
40	51				FR914D		535 (243)	**WS39**	**MD51E91**
50	63				FR914D		480 (218)	**WS39**	**MD63E91**
60	75				FR914D		469 (213)	**WS39**	**MD75E91**
75	93				FR915D		727 (330)	**WS39**	**MD93E91**
100	118				FR916A		770 (350)	**WS19**	**MD118E91**
125	145				FR916A		770 (350)	**WS19**	**MD145E91**
150	175				FR917		1100 (499)	**WS34**	**MD175E91**
200	220				FR918A		1299 (590)	**WS34**	**MD220E91**
250	275				FR918A		1596 (725)	**WS34**	**MD275E91**
300	330				FR919E	318E	2234 (1014)	**WS35**	**MD330E91**
400	440				FR919E		2400 (1090)	**WS35**	**MD440E91**

460 Delta Volts to 400Y/231 Volts

hp	kVA	Full Capacity Taps FCAN	FCBN	°C Temp. Rise	Frame	Wiring Diagram Number	Weight Lb (kg)	Weathershield	Catalog Number
5	7.5	1 at +5%	1 at –5%	150	FR912D	286D	193 (88)	**WS38**	**MD075E75**
7.5	11				FR912D		158 (72)	**WS38**	**MD11E75**
10	14				FR912D		158 (72)	**WS38**	**MD14E75**
15	20				FR912D		216 (98)	**WS38**	**MD20E75**
20	27				FR912D		231 (105)	**WS38**	**MD27E75**
25	34				FR912D		340 (154)	**WS38**	**MD34E75**
30	40				FR912D		339 (154)	**WS38**	**MD40E75**
40	51				FR914D		535 (243)	**WS39**	**MD51E75**
50	63				FR914D		480 (218)	**WS39**	**MD63E75**
60	75				FR914D		469 (213)	**WS39**	**MD75E75**
75	93				FR915D		727 (330)	**WS39**	**MD93E75**
100	118				FR916A		770 (350)	**WS19**	**MD118E75**
125	145				FR916A		770 (350)	**WS19**	**MD145E75**
150	175				FR917		1100 (499)	**WS34**	**MD175E75**
200	220				FR918A		1299 (590)	**WS34**	**MD220E75**
250	275				FR918A		1596 (725)	**WS34**	**MD275E75**
300	330				FR919E	318E	2234 (1014)	**WS35**	**MD330E75**
400	440				FR919E		2400 (1090)	**WS35**	**MD440E75**

Note

For other ratings or catalog numbers not shown, or for special enclosure types (including stainless steel), refer to Eaton.
Frame drawings/dimensions information begins on **Page V2-T2-204**.

Three-Phase Drive Isolation

460 Delta Volts to 460Y/266 Volts

hp	kVA	Full Capacity Taps FCAN	FCBN	°C Temp. Rise	Frame	Wiring Diagram Number	Weight Lb (kg)	Weathershield	Catalog Number
5	7.5	1 at +5%	1 at –5%	150	FR912D	286D	164 (74)	**WS38**	**MD075E92**
7.5	11				FR912D		161 (73)	**WS38**	**MD11E92**
10	14				FR912D		173 (79)	**WS38**	**MD14E92**
15	20				FR912D		231 (105)	**WS38**	**MD20E92**
20	27				FR912D		250 (114)	**WS38**	**MD27E92**
25	34				FR912D		310 (141)	**WS38**	**MD34E92**
30	40				FR912D		310 (141)	**WS38**	**MD40E92**
40	51				FR914D		503 (228)	**WS39**	**MD51E92**
50	63				FR914D		535 (243)	**WS39**	**MD63E92**
60	75				FR914D		535 (243)	**WS39**	**MD75E92**
75	93				FR916A		710 (322)	**WS19**	**MD93E92**
100	118				FR916A		770 (350)	**WS19**	**MD118E92**
125	145				FR916A		866 (393)	**WS19**	**MD145E92**
150	175				FR917		1100 (499)	**WS34**	**MD175E92**
200	220				FR918A		1100 (499)	**WS34**	**MD220E92**
250	275				FR918A		1469 (667)	**WS34**	**MD275E92**
300	330				FR919E	318E	2587 (1174)	**WS35**	**MD330E92**
400	440				FR919E		2500 (1135)	**WS35**	**MD440E92**

Note

For other ratings or catalog numbers not shown, or for special enclosure types (including stainless steel), refer to Eaton.
Frame drawings/dimensions information begins on **Page V2-T2-204**.

Three-Phase Drive Isolation

480 Delta Volts to 240 Delta Volts

hp	kVA	Full Capacity Taps FCAN	FCBN	°C Temp. Rise	Frame	Wiring Diagram Number	Weight Lb (kg)	Weathershield	Catalog Number
5	7.5	1 at +5%	1 at –5%	150	FR912D	300A	193 (88)	**WS38**	**MD075E77**
7.5	11				FR912D		158 (72)	**WS38**	**MD11E77**
10	14				FR912D		158 (72)	**WS38**	**MD14E77**
15	20				FR912D		185 (84)	**WS38**	**MD20E77**
20	27				FR912D		231 (105)	**WS38**	**MD27E77**
25	34				FR912D		329 (149)	**WS38**	**MD34E77**
30	40				FR912D		339 (154)	**WS38**	**MD40E77**
40	51				FR914D		535 (243)	**WS39**	**MD51E77**
50	63				FR914D		480 (218)	**WS39**	**MD63E77**
60	75				FR914D		469 (213)	**WS39**	**MD75E77**
75	93				FR915D		727 (330)	**WS39**	**MD93E77**
100	118				FR916A		770 (350)	**WS19**	**MD118E77**
125	145				FR916A		770 (350)	**WS19**	**MD145E77**
150	175				FR917		1100 (499)	**WS34**	**MD175E77**
200	220				FR918A		1299 (590)	**WS34**	**MD220E77**
250	275				FR918A		1596 (725)	**WS34**	**MD275E77**
300	330				FR919E	348D	2234 (1014)	**WS35**	**MD330E77**
400	440				FR919E		2400 (1090)	**WS35**	**MD440E77**

480 Delta Volts to 480 Delta Volts

hp	kVA	Full Capacity Taps FCAN	FCBN	°C Temp. Rise	Frame	Wiring Diagram Number	Weight Lb (kg)	Weathershield	Catalog Number
5	7.5	1 at +5%	1 at –5%	150	FR912D	300A	193 (88)	**WS38**	**MD075E99**
7.5	11				FR912D		158 (72)	**WS38**	**MD11E99**
10	14				FR912D		158 (72)	**WS38**	**MD14E99**
15	20				FR912D		185 (84)	**WS38**	**MD20E99**
20	27				FR912D		231 (105)	**WS38**	**MD27E99**
25	34				FR912D		329 (149)	**WS38**	**MD34E99**
30	40				FR912D		339 (154)	**WS38**	**MD40E99**
40	51				FR914D		535 (243)	**WS39**	**MD51E99**
50	63				FR914D		480 (218)	**WS39**	**MD63E99**
60	75				FR914D		469 (213)	**WS39**	**MD75E99**
75	93				FR915D		727 (330)	**WS39**	**MD93E99**
100	118				FR916A		770 (350)	**WS19**	**MD118E99**
125	145				FR916A		770 (350)	**WS19**	**MD145E99**
150	175				FR917		1100 (499)	**WS34**	**MD175E99**
200	220				FR918A		1299 (590)	**WS34**	**MD220E99**
250	275				FR918A		1596 (725)	**WS34**	**MD275E99**
300	330				FR919E	348D	2234 (1014)	**WS35**	**MD330E99**
400	440				FR919E		2400 (1090)	**WS35**	**MD440E99**

Note

For other ratings or catalog numbers not shown, or for special enclosure types (including stainless steel), refer to Eaton.
Frame drawings/dimensions information begins on **Page V2-T2-204**.

Three-Phase Drive Isolation

575 Delta Volts to 460Y/266 Volts

hp	kVA	Full Capacity Taps FCAN	FCBN	°C Temp. Rise	Frame	Wiring Diagram Number	Weight Lb (kg)	Weathershield	Catalog Number
5	7.5	1 at +5%	1 at –5%	150	FR912D	286H	158 (72)	**WS38**	**MD075E95**
7.5	11				FR912D		158 (72)	**WS38**	**MD11E95**
10	14				FR912D		158 (72)	**WS38**	**MD14E95**
15	20				FR912D		272 (123)	**WS38**	**MD20E95**
20	27				FR912D		266 (121)	**WS38**	**MD27E95**
25	34				FR912D		360 (163)	**WS38**	**MD34E95**
30	40				FR912D		310 (141)	**WS38**	**MD40E95**
40	51				FR914D		504 (229)	**WS39**	**MD51E95**
50	63				FR914D		506 (230)	**WS39**	**MD63E95**
60	75				FR914D		524 (238)	**WS39**	**MD75E95**
75	93				FR916A		730 (331)	**WS19**	**MD93E95**
100	118				FR916A		770 (350)	**WS19**	**MD118E95**
125	145				FR916A		770 (350)	**WS19**	**MD145E95**
150	175				FR917		1282 (582)	**WS34**	**MD175E95**
200	220				FR917		1201 (545)	**WS34**	**MD220E95**
250	275				FR923	318F	702 (319)	**WS37**	**MD275E95**
300	330				FR919E		2263 (1027)	**WS35**	**MD330E95**
400	440				FR919E		2400 (1090)	**WS35**	**MD440E95**

575 Delta Volts to 575Y/332 Volts

hp	kVA	Full Capacity Taps FCAN	FCBN	°C Temp. Rise	Frame	Wiring Diagram Number	Weight Lb (kg)	Weathershield	Catalog Number
5	7.5	1 at +5%	1 at –5%	150	FR912D	286H	158 (72)	**WS38**	**MD075E96**
7.5	11				FR912D		158 (72)	**WS38**	**MD11E96**
10	14				FR912D		231 (105)	**WS38**	**MD14E96**
15	20				FR912D		231 (105)	**WS38**	**MD20E96**
20	27				FR912D		231 (105)	**WS38**	**MD27E96**
25	34				FR912D		261 (118)	**WS38**	**MD34E96**
30	40				FR912D		310 (141)	**WS38**	**MD40E96**
40	51				FR914D		480 (218)	**WS39**	**MD51E96**
50	63				FR914D		500 (227)	**WS39**	**MD63E96**
60	75				FR914D		538 (244)	**WS39**	**MD75E96**
75	93				FR916A		600 (272)	**WS19**	**MD93E96**
100	118				FR916A		948 (430)	**WS19**	**MD118E96**
125	145				FR916A		868 (394)	**WS19**	**MD145E96**
150	175				FR917		1320 (599)	**WS34**	**MD175E96**
200	220				FR917		1332 (605)	**WS34**	**MD220E96**
250	275				FR918A	318F	1350 (613)	**WS34**	**MD275E96**
300	330				FR919E		2336 (1061)	**WS35**	**MD330E96**
400	440				FR919E		2500 (1137)	**WS35**	**MD440E96**

Note

For other ratings or catalog numbers not shown, or for special enclosure types (including stainless steel), refer to Eaton.
Frame drawings/dimensions information begins on **Page V2-T2-204**.

Motor Drive Isolation Transformers

Accessories

- Copper windings
- Non-standard voltages
- 50/60 Hz designs
- Delta-delta configuration
- 80°C or 115°C rise designs
- Encapsulated designs (up to 34 kVA). Thermoguards are not available on encapsulated designs
- Totally enclosed non-ventilated
- Electrostatic shields

Please refer to Section 2.7 **Page V2-T2-167**.

Technical Data and Specifications

Frequency

Eaton standard dry-type distribution transformers are designed for 60 Hz operation. Transformers required for other frequencies are available and must be specifically designed.

Overload Capability

Short-term overload is designed into transformers as required by ANSI. Dry-type distribution transformers will deliver 200% nameplate load for one-half hour, 150% load for one hour and 125% load for four hours without being damaged, provided that a constant 50% load precedes and follows the overload. See ANSI C57.96-01.250 for additional limitations.

Continuous overload capacity is not deliberately designed into a transformer because the design objective is to be within the allowed winding temperature rise with nameplate loading.

Insulation System and Temperature Rise

Industry standards classify insulation systems and rise as shown below:

Insulation System Classification

Ambient	+ Winding Rise	+ Hot Spot	= Temp. Class
40°C	55°C	10°C	105°C
40°C	80°C	30°C	150°C
25°C	135°C	20°C	180°C
40°C	115°C	30°C	185°C
40°C	150°C	30°C	220°C

The design life of transformers having different insulation systems is the same—the lower-temperature systems are designed for the same life as the higher-temperature systems.

Enclosures

Eaton ventilated transformers, Type MD, use a NEMA 2 rated (drip-proof) enclosure as standard, and are rated NEMA 3R with the addition of weathershields.

Winding Terminations

Primary and secondary windings are terminated in the wiring compartment. Ventilated transformers have leads brought out to aluminum pads that are pre-drilled to accept Cu/Al lugs. **Lugs are not supplied with these transformers.** Eaton recommends that external cables be rated 75°C for ventilated designs.

Sound Levels

All Eaton 600 volt class general-purpose dry-type distribution transformers are designed to meet NEMA ST-20 sound levels listed here. These are the sound levels measured in a soundproof environment. Actual sound levels measured at an installation will likely be higher due to electrical connections and environmental conditions. Lower sound levels are available and should be specified when the transformer is going to be installed in an area where sound may be a concern.

For additional information, please refer to Section 2.7 **Page V2-T2-171**.

Average Sound Levels

NEMA ST-20 Average Sound Level, dB

Equivalent Winding kVA Range	Self-Cooled Ventilated (up to 1.2 kV) K-Factor 1, 4, 9	Self-Cooled Ventilated (up to 1.2 kV) K-Factor 13, 20	Encapsulated (up to 1.2 kV)
3.00 and below	40	40	45
3.01 to 9.00	40	40	45
9.01 to 15.00	45	45	50
15.01 to 30.00	45	45	50
30.01 to 50.00	45	48	50
50.01 to 75.00	50	53	55
75.01 to 112.50	50	53	55
112.51 to 150.00	50	53	55
150.01 to 225.00	55	58	57
225.01 to 300.00	55	58	57
300.01 to 500.00	60	63	59
500.01 to 700.00	62	65	61
700.01 to 1000.00	64	67	63
Greater than 1000	Consult factory	Consult factory	Consult factory

Note

For other ratings or catalog numbers not shown, or for special enclosure types (including stainless steel), refer to Eaton.

Mini–Power Centers



Contents

Description	*Page*
Motor Drive Isolation Transformers	**V2-T2-97**
Mini–Power Centers	
Catalog Number Selection	**V2-T2-106**
Product Selection	**V2-T2-106**
Accessories	**V2-T2-108**
Technical Data and Specifications	**V2-T2-108**
Totally Enclosed Non-Ventilated Transformers	**V2-T2-109**
Class I, Division 2, Hazardous Location Transformers	**V2-T2-112**
Marine Duty Transformers	**V2-T2-115**
Buck-Boost and Low-Voltage Lighting Transformers	**V2-T2-120**
Medium-Voltage Dry-Type Distribution Transformers	**V2-T2-149**

Mini–Power Centers

Product Description

Note: The following pages provide listings for most standard transformer ratings and catalog numbers. For other ratings or catalog numbers not shown, or for special enclosure types (including stainless steel), refer to Eaton.

- Encapsulated design
- Suitable for indoor or outdoor applications
- 180°C insulation system
- 115°C rise standard; 80°C rise optional

Application Description

A mini–power center combines three individual components into one NEMA Type 3R enclosure: a main breaker, an encapsulated single-phase (Type EP) or three-phase (EPT) dry-type transformer, and a secondary distribution loadcenter with main breaker. Interconnecting wiring is completed at the factory. Mini–power centers are used wherever there is a 480 volt or 600 volt distribution system and loads requiring 208Y/120 volt, three-phase or 120/240 volt single-phase. Typical installations include:

- Industrial plant assembly lines
- Plant expansions
- Test equipment
- Temporary construction site power
- Sewage disposal plants
- Warehouses
- Car washes
- Parking lots
- Commercial buildings
- Mini–power centers are encapsulated transformers and are outside the scope of U.S. DOE energy efficiency requirements

Features, Benefits and Functions

- 60 Hz operation
- Indoor/outdoor, NEMA 3R
- Primary main breaker
- Secondary main breaker (Type BR plug-in and Type BAB bolt-on branch breakers not included)
- All live parts enclosed for personnel safety
- Cover is hinged to prevent removal and can be padlocked
- Cores are grounded with a copper lead
- Ground bar is supplied to permit grounding of individual secondary circuits
- Neutral bar is grounded to case
- Branch circuits can be easily added or changed using Type BR plug-in breakers and Type BR plug-in and Type BAB bolt-on
- Suitable for service entrance
- Wide range of configurations available:
  - Aluminum windings and plug-in loadcenter chassis standard
  - Copper windings and plug-in loadcenter chassis also available
  - Copper windings and bolt-on loadcenter chassis available
- Short-term overload capability as required by ANSI
- Meet NEMA ST-20 sound levels

Standards and Certifications

- UL listed
- CSA® certified

Listed

Industry Standards

All Eaton dry-type distribution and control transformers are built and tested in accordance with applicable NEMA, ANSI and IEEE Standards. All 600 volt class transformers are UL listed unless otherwise noted.

Seismically Qualified

Eaton manufactured dry-type distribution transformers are seismically qualified and exceed requirements of the International Building Code (IBC) and California Code Title 24.

Catalog Number Selection

Please refer to Section 2.7 **Page V2-T2-162**.

2

Product Selection

Additional Product Selection information begins on **Page V2-T2-165**.

Single-Phase

480 Volts to 120/240 Volts

kVA	Full Capacity Taps FCBN	Frame	Wiring Diagram Number	Weight Lb (kg)	Main Circuit Breaker Primary ①	Main Circuit Breaker Secondary	Branch Breakers Max. Number ②③ Single-Pole	Branch Breakers Max. Number ②③ Two-Pole	Max. Amp	Catalog Number
3	2 at –5%	FR283	97A3K	105 (47)	EHD2015	BR215	8	4	12	**P48G11S03P**
5	2 at –5%	FR284	110A5K	110 (50)	EHD2020	BR225	12	6	20	**P48G11S05P**
7.5	2 at –5%	FR284	109A7K	125 (56)	EHD2030	BR230	12	6	30	**P48G11S07P**
10	2 at –5%	FR285	108A10K	180 (82)	EHD2040	BR250	12	6	40	**P48G11S10P**
15	2 at –5%	FR286	107A15K	215 (98)	EHD2060	BR270	20	10	60	**P48G11S15P**
25	2 at –5%	FR287	106A25K	373 (169)	EHD2100	BR2125	26	13	100	**P48G11S25P**

600 Volts to 120/240 Volts

kVA	Full Capacity Taps FCBN	Frame	Wiring Diagram Number	Weight Lb (kg)	Main Circuit Breaker Primary ①	Main Circuit Breaker Secondary	Branch Breakers Max. Number ②③ Single-Pole	Branch Breakers Max. Number ②③ Two-Pole	Max. Amp	Catalog Number
5	2 at –5%	FR284	110B5K	110 (50)	FDB2015	BR225	12	6	20	**P60G11S05P**
7.5	2 at –5%	FR284	109B7K	125 (56)	FDB2030	BR230	12	6	30	**P60G11S07P**
10	2 at –5%	FR285	108B10K	180 (82)	FDB2040	BR250	12	6	40	**P60G11S10P**
15	2 at –5%	FR286	107B15K	215 (98)	FDB2060	BR270	20	10	60	**P60G11S15P**
25	2 at –5%	FR287	106B25K	373 (169)	FDB2100	BR2125	26	13	100	**P60G11S25P**

Three-Phase

480 Delta Volts to 208Y/120 Volts

kVA	Full Capacity Taps FCBN	Frame	Wiring Diagram Number	Weight Lb (kg)	Main Circuit Breaker Primary	Main Circuit Breaker Secondary	Branch Breakers Max. Number ②③ Single-Pole	Branch Breakers Max. Number ②③ Two-Pole	Branch Breakers Max. Number ②③ Three-Pole	Max. Amp	Catalog Number
15	2 at –5%	FR289A	105A15K	320 (145)	EHD3040	BR350	18	9	6	40	**P48G28T15P**
22.5	2 at –5%	FR290A	103A21K	565 (256)	EHD3070	BR370	18	9	6	60	**P48G28T21P**
30	2 at –5%	FR291A	104A30K	635 (288)	EHD3090	BR3100	24	12	8	80	**P48G28T30P**

600 Delta Volts to 208Y/120 Volts

kVA	Full Capacity Taps FCBN	Frame	Wiring Diagram Number	Weight Lb (kg)	Main Circuit Breaker Primary	Main Circuit Breaker Secondary	Branch Breakers Max. Number ②③ Single-Pole	Branch Breakers Max. Number ②③ Two-Pole	Branch Breakers Max. Number ②③ Three-Pole	Max. Amp	Catalog Number
15	2 at –5%	FR289A	105D15K	320 (145)	FDB3030	BR350	18	9	6	40	**P60G28T15P**
22.5	2 at –5%	FR290A	103B21K	565 (256)	FDB3050	BR370	18	9	6	60	**P60G28T21P**
30	2 at –5%	FR291A	104B30K	635 (288)	FDB3070	BR3100	24	12	8	80	**P60G28T30P**

Notes

① Primary breakers with higher interrupting capacity available. For HFD breaker, add suffix "H." For FD breaker, add suffix "F." For FDC breaker, add suffix "C." Main breakers are fixed only.

② Combinations can be selected.

③ Branch breakers not included. Use Eaton's Type BR.

For 304 grade stainless steel enclosure, replace 10th character of catalog number with an "SS" suffix, e.g., P48G11S03SS, or add "SS" suffix before the addition of "CUB."
For 316 grade stainless steel enclosure, replace 10th character of catalog number with an "S6" suffix, e.g., P48G11S03S6, or add "S6" suffix before the addition of "CUB."
For other ratings or catalog numbers not shown, or for special enclosure types (including stainless steel), refer to Eaton. Frame drawings/dimensions information begins on **Page V2-T2-204**.

All Copper, Bolt-On Breaker Designs—Single-Phase

480 Volts to 120/240 Volts

kVA	Full Capacity Taps FCBN	Frame	Wiring Diagram Number	Weight Lb (kg)	Main Circuit Breaker Primary ①	Main Circuit Breaker Secondary	Branch Breakers Max. Number ②③ Single-Pole	Branch Breakers Max. Number ②③ Two-Pole	Max. Amp	Catalog Number
3	2 at –5%	FR306	97A3K	105 (47)	EHD2015L	BAB2015	8	4	12	**P48G11S03CUB**
5	2 at –5%	FR307	110A5K	110 (50)	EHD2020L	BAB2025	12	6	20	**P48G11S05CUB**
7.5	2 at –5%	FR307	109A7K	110 (50)	EHD2030L	BAB2030	12	6	30	**P48G11S07CUB**
10	2 at –5%	FR308	108A10K	180 (82)	EHD2040L	BAB2050	12	6	40	**P48G11S10CUB**
15	2 at –5%	FR309	108A15K	215 (98)	EHD2060L	BAB2070	24	12	60	**P48G11S15CUB**
25	2 at –5%	FR310	106A25K	385 (175)	EHD2100L	BAB2125	26	13	100	**P48G11S25CUB**

600 Volts to 120/240 Volts

kVA	Full Capacity Taps FCBN	Frame	Wiring Diagram Number	Weight Lb (kg)	Main Circuit Breaker Primary ①	Main Circuit Breaker Secondary	Branch Breakers Max. Number ②③ Single-Pole	Branch Breakers Max. Number ②③ Two-Pole	Max. Amp	Catalog Number
3	2 at –5%	FR306	97B3K	105 (47)	FDB2015L	BAB2015	8	4	12	**P60G11S03CUB**
5	2 at –5%	FR307	110B5K	110 (50)	FDB2020L	BAB2025	12	6	20	**P60G11S05CUB**
7.5	2 at –5%	FR307	109B7K	110 (50)	FDB2030L	BAB2030	12	6	30	**P60G11S07CUB**
10	2 at –5%	FR308	108B10K	180 (82)	FDB2040L	BAB2050	12	6	40	**P60G11S10CUB**
15	2 at –5%	FR309	108B15K	215 (98)	FDB2060L	BAB2070	24	12	60	**P60G11S15CUB**
25	2 at –5%	FR310	106B25K	385 (175)	FDB2100L	BAB2125	26	13	100	**P60G11S25CUB**

Three-Phase

480 Volts to 208Y/120 Volts

kVA	Full Capacity Taps FCBN	Frame	Wiring Diagram Number	Weight Lb (kg)	Main Circuit Breaker Primary	Main Circuit Breaker Secondary	Branch Breakers Max. Number ②③ Single-Pole	Branch Breakers Max. Number ②③ Two-Pole	Branch Breakers Max. Number ②③ Three-Pole	Max. Amp	Catalog Number
15	2 at –5%	FR289A	105A15K	320 (145)	EHD3040L	BAB3050H	18	9	6	40	**P48G28T15CUB**
22.5	2 at –5%	FR290A	103A21K	565 (257)	EHD3070L	BAB3070H	18	9	6	60	**P48G28T21CUB**
30	2 at –5%	FR291A	104A30K	635 (288)	EHD3090L	BAB3100H	24	12	8	80	**P48G28T30CUB**

600 Volts to 208Y/120 Volts

kVA	Full Capacity Taps FCBN	Frame	Wiring Diagram Number	Weight Lb (kg)	Main Circuit Breaker Primary	Main Circuit Breaker Secondary	Branch Breakers Max. Number ②③ Single-Pole	Branch Breakers Max. Number ②③ Two-Pole	Branch Breakers Max. Number ②③ Three-Pole	Max. Amp	Catalog Number
15	2 at –5%	FR289A	105D15K	320 (145)	FDB3030L	BAB3050H	18	9	6	40	**P60G28T15CUB**
22.5	2 at –5%	FR290A	103B21K	565 (257)	FDB3050L	BAB3070H	18	9	6	60	**P60G28T21CUB**
30	2 at –5%	FR291A	104B30K	635 (288)	FDB3070L	BAB3100H	24	12	8	80	**P60G28T30CUB**

Notes

① Primary breakers with higher interrupting capacity available. For HFD breaker, add suffix "H." For FD breaker, add suffix "F." For FDC breaker, add suffix "C." Main breakers are fixed only. UL Listed only, not CSA.

② Combinations can be selected.

③ Branch breakers not included. Use Eaton's Type BAB.

For 304 grade stainless steel enclosure, replace 10th character of catalog number with an "SS" suffix, e.g., P48G11S03SS, or add "SS" suffix before the addition of "CUB."
For 316 grade stainless steel enclosure, replace 10th character of catalog number with an "S6" suffix, e.g., P48G11S03S6, or add "S6" suffix before the addition of "CUB."
For other ratings or catalog numbers not shown, or for special enclosure types (including stainless steel), refer to Eaton.
Frame drawings/dimensions information begins on **Page V2-T2-204**.

Mini–Power Centers

Accessories

2

Please refer to Section 2.7
Page V2-T2-167.

Technical Data and Specifications

Frequency

Eaton standard dry-type distribution transformers are designed for 60 Hz operation. Transformers required for other frequencies must be specifically designed.

Overload Capability

Short-term overload is designed into transformers as required by ANSI. Dry-type distribution transformers will deliver 200% nameplate load for one-half hour, 150% load for one hour and 125% load for four hours without being damaged, provided that a constant 50% load precedes and follows the overload. See ANSI C57.96-01.250 for additional limitations.

Continuous overload capacity is not deliberately designed into a transformer because the design objective is to be within the allowed winding temperature rise with nameplate loading.

Insulation System and Temperature Rise

Industry standards classify insulation systems and rise as shown below:

Insulation System Classification

Ambient	+ Winding Rise	+ Hot Spot	= Temp. Class
40°C	55°C	10°C	105°C
40°C	80°C	30°C	150°C
25°C	135°C	20°C	180°C
40°C	115°C	30°C	185°C
40°C	150°C	30°C	220°C

The design life of transformers having different insulation systems is the same—the lower-temperature systems are designed for the same life as the higher-temperature systems.

Winding Terminations

Eaton recommends that external cables be rated 90°C (sized at 75°C ampacity) for encapsulated designs and 75°C for ventilated designs.

Sound Levels

All Eaton 600 volt class general-purpose dry-type distribution transformers are designed to meet NEMA ST-20 sound levels listed here. These are the sound levels measured in a soundproof environment. Actual sound levels measured at an installation will likely be higher due to electrical connections and environmental conditions. Lower sound levels are available and should be specified when the transformer is going to be installed in an area where sound may be a concern.

Average Sound Levels

NEMA ST-20 Average Sound Level, dB

Equivalent Winding kVA Range	Self-Cooled Ventilated (up to 1.2 kV) K-Factor 1, 4, 9	Self-Cooled Ventilated (up to 1.2 kV) K-Factor 13, 20	Encapsulated (up to 1.2 kV)
3.00 and below	40	40	45
3.01 to 9.00	40	40	45
9.01 to 15.00	45	45	50
15.01 to 30.00	45	45	50
30.01 to 50.00	45	48	50
50.01 to 75.00	50	53	55
75.01 to 112.50	50	53	55
112.51 to 150.00	50	53	55
150.01 to 225.00	55	58	57
225.01 to 300.00	55	58	57
300.01 to 500.00	60	63	59
500.01 to 700.00	62	65	61
700.01 to 1000.00	64	67	63
Greater than 1000	Consult factory	Consult factory	Consult factory

Note

For other ratings or catalog numbers not shown, or for special enclosure types (including stainless steel), refer to Eaton. The following pages provide listings for most standard transformer ratings and styles. For all-copper and bolt-on-breaker designs, contact Eaton.

Three-Phase Type DT-3E Totally Enclosed Non-Ventilated



Contents

Description	*Page*
Motor Drive Isolation Transformers	**V2-T2-97**
Mini–Power Centers	**V2-T2-105**
Totally Enclosed Non-Ventilated Transformers	
Catalog Number Selection	**V2-T2-110**
Product Selection	**V2-T2-110**
Accessories	**V2-T2-111**
Technical Data and Specifications	**V2-T2-111**
Class I, Division 2, Hazardous Location Transformers	**V2-T2-112**
Marine Duty Transformers	**V2-T2-115**
Buck-Boost and Low-Voltage Lighting Transformers	**V2-T2-120**
Medium-Voltage Dry-Type Distribution Transformers	**V2-T2-149**

Totally Enclosed Non-Ventilated Transformers

Product Description

Note: The following pages provide listings for most standard transformer ratings and catalog numbers. For other ratings or catalog numbers not shown, or for special enclosure types (including stainless steel), refer to Eaton.

- Suitable for indoor or outdoor applications
- Totally enclosed, non-ventilated enclosures rated NEMA 3R
- 220°C insulation system
- 150°C rise standard; 115°C or 80°C rise optional
- Totally enclosed non-ventilated transformers are specifically excluded from the scope of U.S. DOE energy efficiency requirements

Application Description

Totally enclosed non-ventilated dry-type transformers are for special applications, where because of adverse atmospheric conditions it is desirable to use a dry-type non-ventilated transformer vs. the ventilated standard unit, which has openings in its enclosure to allow air to flow directly over the core and coil.

In applications where the atmosphere contains conductive, corrosive, or combustible materials, which might damage a transformer, or lint and dust flyings that might block the ventilation passages, the non-ventilated transformer is highly suited. It has no openings in the enclosure. Heat is dissipated by radiating from the surface area of the enclosure. Consequently, the enclosures are larger than those of the standard ventilated type. Non-ventilated transformers are suited for application in the textile, chemical, automotive, petrochemical, foundry, cement, food, paper and other industries.

Features, Benefits and Functions

- 60 Hz operation (50/60 Hz operation available)
- Short-term overload capability as required by ANSI
- Meet NEMA ST-20 sound levels

Standards and Certifications

- UL listed

Listed

Industry Standards

All Eaton dry-type distribution and control transformers are built and tested in accordance with applicable NEMA, ANSI and IEEE Standards.

Seismically Qualified

Eaton manufactured dry-type distribution transformers are seismically qualified and exceed requirements of the International Building Code (IBC) and California Code Title 24.

Catalog Number Selection

Please refer to Section 2.7 **Page V2-T2-162**.

2

Product Selection

Additional Product Selection information begins on **Page V2-T2-165**.

Single-Phase—Type DS-3E, 60 Hz ①

240 x 480 Volts to 120/240 Volts +1–5%, –2–5% at 240 Volts Primary; +2–2.5%, –4–2.5% at 480 Volts Primary

kVA	Type	°C Temp. Rise	Frame	Wiring Diagram Number	Weight Lb (kg)	Catalog Number
15	DS-3E	150	FR817N	3XA	350 (159)	**T20P11S15NV**
25	DS-3E	150	FR818N	3XA	350 (159)	**T20P11S25NV**
37.5	DS-3E	150	FR820N	3XA	600 (274)	**T20P11S37NV**
50	DS-3E	150	FR820N	3XA	720 (329)	**T20P11S50NV**

Three-Phase—Type DT-3E, 60 Hz ①

480 Delta Volts to 208Y/120 Volts +2–2.5% FCAN, 4–2.5% FCBN Taps

kVA	Type	°C Temp. Rise	Frame	Wiring Diagram Number	Weight Lb (kg)	Catalog Number
15	DT-3E	150	FR912DN	280B	480 (217)	**V48M28T15NV**
30	DT-3E	150	FR912DN	280B	480 (217)	**V48M28T30NV**
45	DT-3E	150	FR915DN	280B	600 (272)	**V48M28T45NV**
75	DT-3E	150	FR916AN	280B	760 (344)	**V48M28T75NV**
112.5	DT-3E	150	FR917N	280B	1100 (499)	**V48M28T12NV**
150	DT-3E	150	FR918AN	280B	1300 (589)	**V48M28T49NV**
225	DT-3E	150	FR919EN	275A	2400 (1088)	**V48M28T22NV**
300	DT-3E	150	FR920EN	275A	2900 (1315)	**V48M28T33NV**

Notes

① Transformers Type EPT 75 kVA and smaller three-phase, and Type EP 37.5 kVA and smaller single-phase, are furnished in place of non-ventilated transformers as standard. See general-purpose transformers.

Contact your local Eaton sales office for availability of additional totally enclosed non-ventilated transformers. Contact your local Eaton sales office for CE Mark transformer requirements. For other ratings or catalog numbers not shown, or for special enclosure types (including stainless steel), refer to Eaton. Frame drawings/dimensions information begins on **Page V2-T2-204**.

Totally Enclosed Non-Ventilated Transformers

Accessories

Please refer to Section 2.7 **Page V2-T2-167**.

Technical Data and Specifications

Frequency

Eaton standard dry-type distribution transformers are designed for 60 Hz operation. Transformers required for other frequencies are available and must be specifically designed.

Overload Capability

Short-term overload is designed into transformers as required by ANSI. Dry-type distribution transformers will deliver 200% nameplate load for one-half hour, 150% load for one hour and 125% load for four hours without being damaged, provided that a constant 50% load precedes and follows the overload. See ANSI C57.96-01.250 for additional limitations.

Continuous overload capacity is not deliberately designed into a transformer because the design objective is to be within the allowed winding temperature rise with nameplate loading.

Insulation System and Temperature Rise

Industry standards classify insulation systems and rise as shown below:

Insulation System Classification

Ambient	+ Winding Rise	+ Hot Spot	= Temp. Class
40°C	55°C	10°C	105°C
40°C	80°C	30°C	150°C
25°C	135°C	20°C	180°C
40°C	115°C	30°C	185°C
40°C	150°C	30°C	220°C

The design life of transformers having different insulation systems is the same—the lower-temperature systems are designed for the same life as the higher-temperature systems.

Enclosures

Eaton totally enclosed, non-ventilated transformers, Types DS-3E and DT-3E, use a NEMA 3R rated enclosure as standard.

Winding Terminations

Primary and secondary windings are terminated in the wiring compartment. Totally enclosed non-ventilated transformers have leads brought out to aluminum pads that are pre-drilled to accept Cu/Al lugs. **Lugs are not supplied with these transformers.** Eaton recommends external cables be rated 75°C for ventilated designs.

Series-Multiple Windings

Series-multiple windings consist of two similar coils in each winding that can be connected in series or parallel (multiple). Transformers with series-multiple windings are designated with an "x" or "/" between the voltage ratings, such as voltages of "120/240" or "240 x 480." If the series-multiple winding is designated by an "x," the winding can be connected only for a series or parallel. With the "/" designation, a mid-point also becomes available in addition to the series or parallel connection. As an example, a 120 x 240 winding can be connected for either 120 (parallel) or 240 (series), but a 120/240 winding can be connected for 120 (parallel), or 240 (series), or 240 with a 120 mid-point.

Note: The preceding pages provide listings for most standard transformer ratings and catalog numbers. For all-copper and bolt-on-breaker designs, contact Eaton. For other ratings or catalog numbers not shown, or for special enclosure types (including stainless steel), refer to Eaton.

Three-Phase Type EPTZ Encapsulated



Contents

Description	*Page*
Motor Drive Isolation Transformers	**V2-T2-97**
Mini–Power Centers	**V2-T2-105**
Totally Enclosed Non-Ventilated Transformers	**V2-T2-109**
Class I, Division 2, Hazardous Location Transformers	
Catalog Number Selection	**V2-T2-113**
Product Selection	**V2-T2-113**
Accessories	**V2-T2-114**
Technical Data and Specifications	**V2-T2-114**
Marine Duty Transformers	**V2-T2-115**
Buck-Boost and Low-Voltage Lighting Transformers	**V2-T2-120**
Medium-Voltage Dry-Type Distribution Transformers	**V2-T2-149**

Class I, Division 2, Hazardous Location Transformers

Product Description

Note: The following pages provide listings for most standard transformer ratings and catalog numbers. For other ratings or catalog numbers not shown, or for special enclosure types (including stainless steel), refer to Eaton.

- Encapsulated design
- Suitable for indoor or outdoor applications
- Totally enclosed, non-ventilated enclosures
- 180°C insulation system
- 115°C rise standard; 80°C rise optional
- Mountable in any position indoors. Upright only outdoors
- Available in ratings up to 600 volts primary, 25 kVA single-phase, 75 kVA three-phase
- Available in NEMA Type 4X enclosure
- Encapsulated transformers, such as Class I, Division 2 transformers, are specifically excluded from the scope of U.S. DOE energy efficiency requirements

Application Description

Type EPZ and EPTZ transformers are labeled as "Suitable for use in Class I, Division 2, Groups A, B, C and D locations, as defined by NEC Article 501, with NEC-recommended installation procedures for dry-type transformers rated under 600 volts nominal operation."

A Class I, Division 2 location per Section 500 of the NEC is defined as:

1. A location in which volatile flammable liquids or gases are handled, processed or used, but that normally will be confined within closed containers or systems from which they can escape only in case of accidental rupture or breakdown of the container or system.
2. Or, a location where ignitable concentrations of gases or vapors are normally prevented by positive mechanical ventilation and that might become hazardous through failure of the ventilation equipment.
3. Or, a location that is adjacent to a Class I, Division 1 location and ignitable concentrations of gases or vapors might occasionally enter.

Atmospheres classified by NEC Section 500 as Group A includes acetylene. Group B includes gases such as hydrogen and formaldehyde. Group C may contain gases or vapors such as ethyl ether, ethylene, or the equivalent. Atmospheres classified as Group D may contain gases or vapors such as acetone, ammonia, benzene, butane, cyclopropane, ethanol, gasoline, hexane, methanol, methane, natural gas, naphtha, propane or the equivalent.

Features, Benefits and Functions

- NEMA 3R enclosure
- 60 Hz operation
- Aluminum windings (copper optional)
- Short-term overload capability as required by ANSI
- Meet NEMA ST-20 sound levels

Standards and Certifications

- UL listed

UL Listed

Industry Standards

All Eaton dry-type distribution and control transformers are built and tested in accordance with applicable NEMA, ANSI and IEEE Standards.

Seismically Qualified

Eaton manufactured dry-type distribution transformers are seismically qualified and exceed requirements of the International Building Code (IBC) and California Code Title 24.

Catalog Number Selection

Please refer to Section 2.7 **Page V2-T2-162**.

Product Selection

Additional Product Selection information begins on **Page V2-T2-165**.

Single-Phase—Type EPZ, 60 Hz

480 Volts to 120/240 Volts

kVA	Full Capacity Taps FCAN	Full Capacity Taps FCBN	Type	°C Temp. Rise	Frame	Wiring Diagram Number	Weight Lb (kg)	Catalog Number
0.05	—	—	EPZ	115	FR57H	524H	13 (6)	**Z48N11S51A**
0.75	—	—			FR58H		21 (10)	**Z48N11S76A**
1	—	—			FR59H		31 (14)	**Z48N11S01A**
1.5	—	—			FR67H		40 (18)	**Z48N11S16A**
2	—	—			FR68H		40 (18)	**Z48N11S02A**
3	—	—			FR176H		65 (30)	**Z48N11S03A**
5	—	—			FR177H		113 (51)	**Z48N11S05A**
7.5	—	—			FR178H		123 (56)	**Z48N11S07A**
10	—	—			FR179H		193 (88)	**Z48N11S10A**
15	—	—			FR180H		234 (107)	**Z48N11S15**
25	—	—			FR182H		375 (170)	**Z48N11S25A**

Three-Phase—Type EPTZ, 60 Hz

480 Delta Volts to 208Y/120 Volts Three-Phase

kVA	Full Capacity Taps FCAN	Full Capacity Taps FCBN	Type	°C Temp. Rise	Frame	Wiring Diagram Number	Weight Lb (kg)	Catalog Number
3	—	2 at –5%	EPTZ	115	FR201H	70A	116 (53)	**Z48G28T03A**
6	—	2 at –5%			FR200H		143 (65)	**Z48G28T06A**
9	—	2 at –5%			FR103H		166 (75)	**Z48G28T09A**
15	—	2 at –5%			FR95H		275 (125)	**Z48G28T15A**
30	—	2 at –5%			FR243H	66A	523 (239)	**Z48G28T30**
45	—	2 at –5%			FR244H		660 (299)	**Z48G28T45A**
75	—	2 at –5%			FR245H		1275 (580)	**Z48G28T75A** ①

480 Delta Volts to 240 Delta Volts with 120 Volt Lighting Tap on B Phase ②

kVA	Full Capacity Taps FCAN	Full Capacity Taps FCBN	Type	°C Temp. Rise	Frame	Wiring Diagram Number	Weight Lb (kg)	Catalog Number
6	—	2 at –5%	EPTZ	115	FR102H	95A	115 (52)	**Z48G22T06A**
9	—	2 at –5%			FR97H		160 (73)	**Z48G22T09A**
15	—	2 at –5%			FR195H		340 (155)	**Z48G22T15A**
30	—	2 at –5%			FR243H	62A	422 (191)	**Z48G22T30A**
45	—	2 at –5%			FR244H		660 (299)	**Z48G22T45A**

Notes

① Floor-mount only.

② Center Tap capacity limited to 5% of rated kVA.

For 316 grade stainless steel enclosure, replace 10th character of catalog number with an "SS" suffix. Contact your local Eaton sales office for CE Mark transformer requirements. For other ratings or catalog numbers not shown, or for special enclosure types (including stainless steel), refer to Eaton. Frame drawings/dimensions information begins on **Page V2-T2-204**.

Class I, Division 2, Hazardous Location Transformers

Accessories

Please refer to Section 2.7 **Page V2-T2-167**.

Technical Data and Specifications

Frequency

Eaton standard dry-type distribution transformers are designed for 60 Hz operation. Transformers required for other frequencies are available and must be specifically designed.

Overload Capability

Short-term overload is designed into transformers as required by ANSI. Dry-type distribution transformers will deliver 200% nameplate load for one-half hour, 150% load for one hour, and 125% load for four hours without being damaged, provided that a constant 50% load precedes and follows the overload. See ANSI C57.96-01.250 for additional limitations.

Continuous overload capacity is not deliberately designed into a transformer because the design objective is to be within the allowed winding temperature rise with nameplate loading.

Insulation System and Temperature Rise

Industry standards classify insulation systems and rise as shown below:

Insulation System Classification

Ambient	+ Winding Rise	+ Hot Spot	= Temp. Class
40°C	55°C	10°C	105°C
40°C	80°C	30°C	150°C
25°C	135°C	20°C	180°C
40°C	115°C	30°C	185°C
40°C	150°C	30°C	220°C

The design life of transformers having different insulation systems is the same—the lower-temperature systems are designed for the same life as the higher-temperature systems.

Enclosures

Eaton encapsulated transformers, Types EPZ and EPTZ, use a NEMA 3R rated enclosure.

Sound Levels

All Eaton 600 volt class general-purpose dry-type distribution transformers are designed to meet NEMA ST-20 sound levels listed here. These are the sound levels measured in a soundproof environment. Actual sound levels measured at an installation will likely be higher due to electrical connections and environmental conditions. Lower sound levels are available and should be specified when the transformer is going to be installed in an area where sound may be a concern.

Winding Terminations

Lugs are not supplied with these transformers. Eaton recommends that external cables be rated 90°C (sized at 75°C ampacity) for encapsulated designs and 75°C for ventilated designs.

Unused tap leads must be properly insulated prior to energization. EPZ and EPTZ transformers are UL and cUL listed.

Series-Multiple Windings

Series-multiple windings consist of two similar coils in each winding that can be connected in series or parallel (multiple). Transformers with series-multiple windings are designated with an "x" or "/" between the voltage ratings, such as voltages of "120/240" or "240 x 480." If the series-multiple winding is designated by an "x," the winding can be connected only for a series or parallel. With the "/" designation, a mid-point also becomes available in addition to the series or parallel connection. As an example, a 120 x 240 winding can be connected for either 120 (parallel) or 240 (series), but a 120/240 winding can be connected for 120 (parallel), 240 (series) or 240 with a 120 mid-point.

Marine Duty Transformers



Contents

Description	*Page*
Motor Drive Isolation Transformers	**V2-T2-97**
Mini–Power Centers	**V2-T2-105**
Totally Enclosed Non-Ventilated Transformers	**V2-T2-109**
Class I, Division 2, Hazardous Location Transformers	**V2-T2-112**
Marine Duty Transformers	
Catalog Number Selection	**V2-T2-116**
Product Selection	**V2-T2-116**
Accessories	**V2-T2-119**
Technical Data and Specifications	**V2-T2-119**
Buck-Boost and Low-Voltage Lighting Transformers	**V2-T2-120**
Medium-Voltage Dry-Type Distribution Transformers	**V2-T2-149**

Marine Duty Transformers

Product Description

Note: The following pages provide listings for most standard transformer ratings and catalog numbers. For other ratings or catalog numbers not shown, or for special enclosure types (including stainless steel), refer to Eaton.

Types EP, EPT

- Encapsulated design
- Suitable for indoor or outdoor applications
- Totally enclosed, non-ventilated enclosures
- Enclosures are NEMA 3R rated
- Mountable in any position indoors and upright-only outdoors
- 180°C insulation system
- 115°C rise standard; 80°C rise optional
- Copper windings standard
- Available in single-phase ratings through 37.5 kVA (EP)
- Available in three-phase ratings through 75 kVA (EPT)

Types DS-3, DT-3

- Ventilated, NEMA 2 enclosure standard
- Suitable for indoor applications; outdoors when weathershields are also installed
- Upright mounting only
- 220°C insulation system
- 115°C rise standard; 150°C or 80°C rise optional
- Copper windings standard
- Available in single-phase ratings 15–167 kVA and up to 4160 volts primary (DS-3)
- Available in three-phase ratings 15–1500 kVA and up to 4160 volts primary (DT-3)
- cUL Energy Verified in accordance with energy standards: CFR Title 10 Chapter II Part 431, Appendix A of Subpart K and CSA C802.2-12 Update No. 1 May 2013 by Underwriters Laboratories Inc.

Application Description

The basic purpose of a transformer is voltage transformation as near as practically possible to the load for economy and distribution of power. Typical loads for low-voltage dry-type distribution transformers include lighting, heating, air conditioners, fans and machine tools. Such loads are found in commercial, institutional, industrial and residential structures.

Features, Benefits and Functions

- Meets ABS (American Bureau of Shipping) specification
- ABS Type Approval Certificate Number 04-TP517621-X
- 60 Hz operation
- 115°C temperature rise standard
- Copper windings standard
- Short-term overload capability as required by ANSI
- Meet NEMA ST-20 sound levels

Standards and Certifications

- UL listed

Listed

Energy Verified

Industry Standards

All Eaton low-voltage dry-type distribution and control transformers are built and tested in accordance with applicable NEMA, ANSI and IEEE Standards. All 600 volt class transformers are UL listed unless otherwise noted.

Catalog Number Selection

Please refer to Section 2.7 **Page V2-T2-162**.

2

Product Selection

Additional Product Selection information begins on **Page V2-T2-165**.

Single-Phase—Type DS-3M Marine Duty 60 Hz DOE 2016 Energy-Efficient

240 x 480 Volts to 120/240 Volts

kVA	Temperature Rise °C	Frame	Wiring Diagram	Weight Lb (kg)	Type 3R WS Kit	Wallmount Bracket	Catalog Number
15	115	Contact local Eaton representative					**RT20P11F1516CU**
25							**RT20P11F2516CU**
37.5							**RT20P11F3716CU**
50							**RT20P11F5016CU**
75							**RT20P11F7516CU**
100							**RT20P11F9916CU**

600 Volts to 120/240 Volts

kVA	Temperature Rise °C	Frame	Wiring Diagram	Weight Lb (kg)	Type 3R WS Kit	Wallmount Bracket	Catalog Number
15	115	Contact local Eaton representative					**RT60M11F1516CU**
25							**RT60M11F2516CU**
37.5							**RT60M11F3716CU**
50							**RT60M11F5016CU**
75							**RT60M11F7516CU**
100							**RT60M11F9916CU**

Note

Frame drawings/dimensions information begins on **Page V2-T2-204**.

Three-Phase—Type DT-3M Marine Duty 60 Hz DOE 2016 Energy-Efficient

208 Delta Volts to 208Y/120 Volts

kVA	Temperature Rise °C	Frame	Wiring Diagram	Weight Lb (kg)	Type 3R WS Kit	Wallmount Bracket	Catalog Number
15	115	FR939	280E	253 (115)	WS57	WMB05	**MV29M28F1516CU**
30		FR940		455 (206)	WS58	WMB05	**MV29M28F3016CU**
45		FR940		495 (225)	WS58	WMB05	**MV29M28F4516CU**
75		FR942		698 (317)	WS59	WMB04	**MV29M28F7516CU**
112.5		FR943	324A	1335 (606)	WS60	WMB04	**MV29R28F1216CU**
150		FR943		1493 (678)	WS60	WMB04	**MV29R28F4916CU**
225		FR944		2186 (992)	WS61	—	**MV29R28F2216CU**
300		FR945		2696 (1224)	WS62	—	**MV29R28F3316CU**
500		Contact local Eaton representative					**MV29R28F5516CU**

208 Delta Volts to 480Y/277 Volts

kVA	Temperature Rise °C	Frame	Wiring Diagram	Weight Lb (kg)	Type 3R WS Kit	Wallmount Bracket	Catalog Number
15	115	FR939	E0342B	247 (112)	WS57	WMB05	**MV29M47F1516CU**
30		FR940		434 (197)	WS58	WMB05	**MV29M47F3016CU**
45		FR940		600 (272)	WS58	WMB05	**MV29M47F4516CU**
75		FR942		682 (310)	WS59	WMB04	**MV29M47F7516CU**
112.5		FR943	E0351A	1154 (524)	WS60	WMB04	**MV29R47F1216CU**
150		FR943		1500 (681)	WS60	WMB04	**MV29R47F4916CU**
225		FR944		1918 (871)	WS61	—	**MV29R47F2216CU**
300		Contact local Eaton representative					**MV29R47F3316CU**
500							**MV29R47F5516CU**

240 Delta Volts to 208Y/120 Volts

kVA	Temperature Rise °C	Frame	Wiring Diagram	Weight Lb (kg)	Type 3R WS Kit	Wallmount Bracket	Catalog Number
15	115	FR939	280C	253 (115)	WS57	WMB05	**MV24M28F1516CU**
30		FR940		455 (206)	WS58	WMB05	**MV24M28F3016CU**
45		FR940		495 (225)	WS58	WMB05	**MV24M28F4516CU**
75		FR942		698 (317)	WS59	WMB04	**MV24M28F7516CU**
112.5		FR943	324B	1335 (606)	WS60	WMB04	**MV24R28F1216CU**
150		FR943		1493 (678)	WS60	WMB04	**MV24R28F4916CU**
225		FR944		2186 (992)	WS61	—	**MV24R28F2216CU**
300		FR945		2696 (1224)	WS62	—	**MV24R28F3316CU**
500		Contact local Eaton representative					**MV24R28F5516CU**

240 Delta Volts to 480Y/277 Volts

kVA	Temperature Rise °C	Frame	Wiring Diagram	Weight Lb (kg)	Type 3R WS Kit	Wallmount Bracket	Catalog Number
15	115	FR939	E0317A	253 (115)	WS57	WMB05	**MV24M47F1516CU**
30		FR940		455 (206)	WS58	WMB05	**MV24M47F3016CU**
45		FR940		495 (225)	WS58	WMB05	**MV24M47F4516CU**
75		FR942		698 (317)	WS59	WMB04	**MV24M47F7516CU**
112.5		FR943	E0351C	1335 (606)	WS60	WMB04	**MV24R47F1216CU**
150		FR943		1493 (678)	WS60	WMB04	**MV24R47F4916CU**
225		FR944		2186 (992)	WS61	—	**MV24R47F2216CU**
300		Contact local Eaton representative					**MV24R47F3316CU**
500							**MV24R47F5516CU**

Note

Frame drawings/dimensions information begins on **Page V2-T2-204**.

Three-Phase—Type DT-3M Marine Duty 60 Hz DOE 2016 Energy-Efficient

440 Delta Volts to 220Y/127 Volts

kVA	Temperature Rise °C	Frame	Wiring Diagram	Weight Lb (kg)	Type 3R WS Kit	Wallmount Bracket	Catalog Number
15	115	Contact local Eaton representative					**MV44M31F1516CU**
30							**MV44M31F3016CU**
45							**MV44M31F4516CU**
75							**MV44M31F7516CU**
112.5							**MV44M31F1216CU**
150							**MV44M31F4916CU**
225							**MV44M31F2216CU**
300							**MV44M31F3316CU**
500							**MV44M31F5516CU**

480 Delta Volts to 208Y/120 Volts

kVA	Temperature Rise °C	Frame	Wiring Diagram	Weight Lb (kg)	Type 3R WS Kit	Wallmount Bracket	Catalog Number
15	115	FR939	280B	241 (109)	WS57	WMB05	**MV48M28F1516CU**
30		FR940		433 (197)	WS58	WMB05	**MV48M28F3016CU**
45		FR940		471 (214)	WS58	WMB05	**MV48M28F4516CU**
75		FR942		665 (302)	WS59	WMB04	**MV48M28F7516CU**
112.5		FR943		1271 (577)	WS60	WMB04	**MV48M28F1216CU**
150		FR943		1422 (646)	WS60	WMB04	**MV48M28F4916CU**
225		FR944		2082 (945)	WS61	—	**MV48M28F2216CU**
300		FR945		2568 (1166)	WS62	—	**MV48M28F3316CU**
500		Contact local Eaton representative					**MV48M28F5516CU**

480 Delta Volts to 480Y/277 Volts

kVA	Temperature Rise °C	Frame	Wiring Diagram	Weight Lb (kg)	Type 3R WS Kit	Wallmount Bracket	Catalog Number
15	115	FR939	280B	271 (123)	WS57	WMB05	**MV48M47F1516CU**
30		FR940		431 (196)	WS58	WMB05	**MV48M47F3016CU**
45		FR940		485 (220)	WS58	WMB05	**MV48M47F4516CU**
75		FR942		730 (331)	WS59	WMB04	**MV48M47F7516CU**
112.5		FR943		1146 (520)	WS60	WMB04	**MV48M47F1216CU**
150		FR943		1432 (650)	WS60	WMB04	**MV48M47F4916CU**
225		FR944		2150 (976)	WS61	—	**MV48M47F2216CU**
300		FR945		2700 (1226)	WS62	—	**MV48M47F3316CU**
500		Contact local Eaton representative					**MV48M47F5516CU**

Note

Frame drawings/dimensions information begins on **Page V2-T2-204**.

Marine Duty Transformers

Accessories

Please refer to Section 2.7 **Page V2-T2-167**.

Technical Data and Specifications

Frequency

Eaton standard low-voltage dry-type distribution transformers are designed for 60 Hz operation. Transformers required for other frequencies are available and must be specifically designed.

Overload Capability

Short-term overload is designed into transformers as required by ANSI. Dry-type distribution transformers will deliver 200% nameplate load for one-half hour, 150% load for one hour, and 125% load for four hours without being damaged, provided that a constant 50% load precedes and follows the overload. See ANSI C57.96-01.250 for additional limitations.

Continuous overload capacity is not deliberately designed into a transformer because the design objective is to be within the allowed winding temperature rise with nameplate loading.

Insulation System and Temperature Rise

Industry standards classify insulation systems and rise as shown below:

Insulation System Classification

Ambient	+ Winding Rise	+ Hot Spot	= Temp. Class
40°C	55°C	10°C	105°C
40°C	80°C	30°C	150°C
25°C	135°C	20°C	180°C
40°C	115°C	30°C	185°C
40°C	150°C	30°C	220°C

The design life of transformers having different insulation systems is the same—the lower-temperature systems are designed for the same life as the higher-temperature systems.

Enclosures

Eaton ventilated transformers Types DS-3M and DT-3M use a NEMA 2 rated (drip-proof) enclosure as standard, and are rated NEMA 3R with the addition of weathershields. Eaton encapsulated transformers Types EPM and EPTM use a NEMA 3R rated enclosure. Type DT-3M transformers manufactured in enclosures 939, 940, 942, 943, 944 and 945 are UL Listed to be installed with just 2 inches clearance on the sides and rear of the transformer.

Winding Terminations

Primary and secondary windings are terminated in the wiring compartment. Encapsulated units have copper leads or stabs brought out for connections. Ventilated transformers have leads brought out to aluminum pads that are pre-drilled to accept Cu/Al lugs. **Lugs are not supplied with these transformers.** Eaton recommends that external cables be rated 90°C (sized at 75°C ampacity) for encapsulated designs and 75°C for ventilated designs.

Series-Multiple Windings

Series-multiple windings consist of two similar coils in each winding that can be connected in series or parallel (multiple). Transformers with series-multiple windings are designated with an "x" or "/" between the voltage ratings, such as voltages of "120/240" or "240 x 480." If the series-multiple winding is designated by an "x," the winding can be connected only for a series or parallel. With the "/" designation, a mid-point also becomes available in addition to the series or parallel connection. As an example, a 120 x 240 winding can be connected for either 120 (parallel) or 240 (series), but a 120/240 winding can be connected for 120 (parallel), 240 (series) or 240 with a 120 mid-point.

Sound Levels

All Eaton 600 volt class general-purpose low-voltage dry-type distribution transformers are designed to meet NEMA ST-20 sound levels listed here. These are the sound levels measured in a soundproof environment. Actual sound levels measured at an installation will likely be higher due to electrical connections and environmental conditions. Lower sound levels are available and should be specified when the transformer is going to be installed in an area where sound may be a concern.

For additional information, please refer to Section 2.7 **Page V2-T2-171**.

Average Sound Levels

NEMA ST-20 Average Sound Level, dB

Equivalent Winding kVA Range	Self-Cooled Ventilated (up to 1.2 kV) K-Factor 1, 4, 9	Self-Cooled Ventilated (up to 1.2 kV) K-Factor 13, 20	Encapsulated (up to 1.2 kV)
3.00 and below	40	40	45
3.01 to 9.00	40	40	45
9.01 to 15.00	45	45	50
15.01 to 30.00	45	45	50
30.01 to 50.00	45	48	50
50.01 to 75.00	50	53	55
75.01 to 112.50	50	53	55
112.51 to 150.00	50	53	55
150.01 to 225.00	55	58	57
225.01 to 300.00	55	58	57
300.01 to 500.00	60	63	59
500.01 to 700.00	62	65	61
700.01 to 1000.00	64	67	63
Greater than 1000	Consult factory	Consult factory	Consult factory

Type EP Buck-Boost Transformer



Contents

Description	*Page*
Motor Drive Isolation Transformers	**V2-T2-97**
Mini–Power Centers	**V2-T2-105**
Totally Enclosed Non-Ventilated Transformers	**V2-T2-109**
Class I, Division 2, Hazardous Location Transformers	**V2-T2-112**
Marine Duty Transformers	**V2-T2-115**
Buck-Boost and Low-Voltage Lighting Transformers	
Product Selection	**V2-T2-121**
Accessories	**V2-T2-147**
Technical Data and Specifications	**V2-T2-147**
Wiring Diagrams	**V2-T2-148**
Medium-Voltage Dry-Type Distribution Transformers	**V2-T2-149**

Buck-Boost and Low-Voltage Lighting Transformers

Product Description

Note: The following pages provide listings for most standard transformer ratings and catalog numbers. For other ratings or catalog numbers not shown, or for special enclosure types (including stainless steel), refer to Eaton.

Types EP, EPT

- Encapsulated design
- Suitable for indoor or outdoor applications
- Totally enclosed, non-ventilated enclosures
- Enclosures are NEMA 3R rated
- Mountable in any position indoors and upright-only outdoors
- 180°C insulation system
- 115°C rise standard; 80°C rise optional
- Available in single-phase ratings through 7.5 kVA
- Encapsulated transformers, such as buck-boost and low-voltage lighting transformers, are specifically excluded from the scope of U.S. DOE energy efficiency requirements

Application Description

A buck-boost transformer is used to provide an economical method of correcting a lower or higher voltage rating more suitable for efficient operation of electrical equipment. Type EP buck-boost transformers are small kVA, single-phase transformers with dual primary and dual secondary windings, and are usually connected as autotransformers by using one unit for single-phase applications and either two or three units banked for three-phase operation. They are primarily used for motor operation and should not be used for motor control circuits, to correct fluctuating line voltage or to obtain a neutral on a delta system. Buck-boost transformers are ideally suited for use with low-voltage lighting systems, such as outdoor lighting.

Features, Benefits and Functions

- 60 Hz operation
- 600 volt class insulation
- Short-term overload capability as required by ANSI
- Meet NEMA ST-20 sound levels

Standards and Certifications

- UL listed
- CSA certified

Listed

Industry Standards

All Eaton dry-type distribution and control transformers are built and tested in accordance with applicable NEMA, ANSI and IEEE Standards. All 600 volt class transformers are UL listed unless otherwise noted.

Seismically Qualified

Eaton-manufactured dry-type distribution transformers are seismically qualified, and exceed requirements of the International Building Code (IBC) and California Code Title 24.

Catalog Number Selection

Please refer to Section 2.7 **Page V2-T2-162**.

Product Selection

For quick selection data, refer to the tables on this and the following pages.

Selection Requirements

You should have the following information before selecting a buck-boost transformer:

Line Voltage

The voltage that you want to buck (decrease) or boost (increase). This can be found by measuring the supply line voltage with a voltmeter.

Load Voltage

The voltage at which your equipment is designed to operate. This is listed on the nameplate of the load equipment.

Load Amperes or Load kVA

You do not need to know both—one or the other is sufficient for selection purposes. This information usually can be found on the nameplate of the equipment that you want to operate.

Frequency

The supply line frequency must be the same as the frequency of the equipment to be operated—Eaton's buck-boost transformers operate at 60 Hz only.

Phase

The supply line should be the same as the equipment to be operated—either single- or three-phase.

Transformer Interconnection

For three-phase applications, interconnections of transformers should be made in a junction box. Two or three transformers may be used depending on an open delta (2) or wye (3) connection.

5-Step Selector

The tables that follow will simplify the selection of the buck-boost transformers. There are no calculations needed; simply follow these five steps:

1. Refer to the table having the same output voltage as the equipment you want to operate. For example, if you are installing a 240 volt 6 kVA single-phase load use selection table on the page.
2. Select the available line voltage across the top of the chart that is closest to the actual supply voltage. Therefore, for example, if the available line voltage is 213 volts, use the 212 volt column.
3. Read down the column until you reach an output kVA or amps rating equal to or greater than the load requirements. Since 6 kVA, in the example, is not listed, use the next higher rating, or 7.5 kVA.
4. Read across to the far left columns for the catalog number and quantity of transformers for your application. In this case, you will need one (1) catalog number S10N06P01P.
5. Connect the buck-boost transformer(s) you have selected in accordance with the connection diagram specified at the bottom of the available line voltage column. In this example, Diagram "F" would be used.

Note: For single-phase connections and three-phase open delta connections, inputs and outputs may be reversed. kVA capacity remains constant.

Additional Product Selection information begins on **Page V2-T2-165**.

120 x 240 Volts to 12/24 Volts

kVA	°C Temp. Rise	Frame	Weight Lb (kg)	Catalog Number
0.05	115	FR52	7 (3)	**S10N04A81N**
0.10	115	FR54	7 (3)	**S10N04A82N**
0.15	115	FR55	8 (4)	**S10N04A83N**
0.25	115	FR57P	12 (5)	**S10N04P26P**
0.50	115	FR57P	13 (5)	**S10N04P51P**
0.75	115	FR58AP	21 (10)	**S10N04P76P**
1	115	FR67P	31 (14)	**S10N04P01P**
1.5	115	FR67P	40 (18)	**S10N04P16P**
2	115	FR68P	40 (18)	**S10N04P02P**
3	115	FR176	65 (29)	**S10N04A03N**
5	115	FR177	113 (51)	**S10N04A05N**
7.5	115	FR178	123 (55)	**S10N04A07N**

120 x 240 Volts to 16/32 Volts

kVA	°C Temp. Rise	Frame	Weight Lb (kg)	Catalog Number
0.05	115	FR52	7 (3)	**S10N06A81N**
0.10	115	FR54	7 (3)	**S10N06A82N**
0.15	115	FR55	8 (4)	**S10N06A83N**
0.25	115	FR57P	12 (5)	**S10N06P26P**
0.50	115	FR57P	13 (5)	**S10N06P51P**
0.75	115	FR58AP	21 (10)	**S10N06P76P**
1	115	FR67P	31 (14)	**S10N06P01P**
1.5	115	FR67P	40 (18)	**S10N06P16P**
2	115	FR68P	40 (18)	**S10N06P02P**
3	115	FR176	65 (29)	**S10N06A03N**
5	115	FR177	113 (51)	**S10N06A05N**
7.5	115	FR178	123 (55)	**S10N06A07N**

240 x 480 Volts to 24/48 Volts

kVA	°C Temp. Rise	Frame	Weight Lb (kg)	Catalog Number
0.05	115	FR52	7 (3)	**S20N08A81N**
0.10	115	FR54	7 (3)	**S20N08A82N**
0.15	115	FR55	8 (4)	**S20N08A83N**
0.25	115	FR57P	12 (5)	**S20N08P26P**
0.50	115	FR57P	13 (5)	**S20N08P51P**
0.75	115	FR58AP	21 (10)	**S20N08P76P**
1	115	FR67P	31 (14)	**S20N08P01P**
1.5	115	FR67P	40 (18)	**S20N08P16P**
2	115	FR68P	40 (18)	**S20N08P02P**
3	115	FR176	65 (29)	**S20N08A03N**
5	115	FR177	113 (51)	**S20N08A05N**
7.5	115	FR178	123 (55)	**S20N08A07N**

Note

Frame drawings/dimensions information begins on **Page V2-T2-204**.

Single-Phase 115 Volt Output Required, 60 Hz

		Input Available Voltage										
		84		91		96		100		102		
Units Required ①	Unit kVA	Output kVA	Amps	Output kVA	Amps	Output kVA	Amps	Output kVA	Amps	Output kVA	Amps	Catalog Number
1	0.05	—	—	—	—	0.24	2.09	—	—	—	—	**S10N04A81N**
1	0.05	0.13	1.14	0.18	1.56	—	—	0.31	2.70	0.36	3.13	**S10N06A81N**
1	0.10	—	—	—	—	0.48	4.17	—	—	—	—	**S10N04A82N**
1	0.10	0.26	2.29	0.36	3.12	—	—	0.62	5.41	0.72	6.25	**S10N06A82N**
1	0.15	—	—	—	—	0.72	6.25	—	—	—	—	**S10N04A83N**
1	0.15	0.39	3.44	0.54	4.69	—	—	0.93	8.12	1.08	9.37	**S10N06A83N**
1	0.25	—	—	—	—	1.2	10.4	—	—	—	—	**S10N04P26P**
1	0.25	0.659	5.73	0.899	7.81	—	—	1.56	13.5	1.8	15.6	**S10N06P26P**
1	0.50	—	—	—	—	2.4	20.8	—	—	—	—	**S10N04P51P**
1	0.50	1.32	11.5	1.8	15.6	—	—	3.11	27.1	3.59	31.2	**S10N06P51P**
1	0.75	—	—	—	—	3.6	31.2	—	—	—	—	**S10N04P76P**
1	0.75	1.98	17.2	2.7	23.4	—	—	4.67	40.6	5.39	46.8	**S10N06P76P**
1	1	—	—	—	—	4.79	41.7	—	—	—	—	**S10N04P01P**
1	1	2.64	22.9	3.59	31.2	—	—	6.23	54.1	7.19	62.5	**S10N06P01P**
1	1.5	—	—	—	—	7.2	62.5	—	—	—	—	**S10N04P16P**
1	1.5	3.95	34.4	5.39	46.9	—	—	9.34	81.2	10.8	93.7	**S10N06P16P**
1	2	—	—	—	—	9.58	83.3	—	—	—	—	**S10N04P02P**
1	2	5.27	45.8	7.19	62.5	—	—	12.5	108	14.4	125	**S10N06P02P**
1	3	—	—	—	—	14.37	125.1	—	—	—	—	**S10N04A03N**
1	3	7.92	68.7	10.77	93.6	—	—	18.69	162.3	21.57	187.5	**S10N06A03N**
1	5	—	—	—	—	23.95	208.5	—	—	—	—	**S10N04A05N**
1	5	13.2	115	18	156	—	—	31.15	270.5	35.95	312.5	**S10N06A05N**
1	7.5	—	—	—	—	36	312	—	—	—	—	**S10N04A07N**
1	7.5	19.8	172	27	234	—	—	46.7	406	53.9	468	**S10N06A07N**
Connection Diagram ②		D		B		B		C		A		

Notes

① Additional wiring trough may be required.

② Refer to **Page V2-T2-148** for buck-boost wiring diagrams.

Output voltage for lower input voltage can be found by: $\frac{\text{Rated Output Voltage}}{\text{Rated Input Voltage}}$ x Input Actual Voltage = Output New Voltage.

Output kVA available at reduced input voltage can be found by: $\frac{\text{Actual Input Voltage}}{\text{Rated Input Voltage}}$ x Output kVA = New kVA Rating.

Frame drawings/dimensions information begins on **Page V2-T2-204**.

Single-Phase 115 Volt Output Required, 60 Hz

		Input Available Voltage										
		105		127		130		138		146		
Units Required ①	Unit kVA	Output kVA	Amps	Output kVA	Amps	Output kVA	Amps	Output kVA	Amps	Output kVA	Amps	Catalog Number
1	0.05	0.48	4.17	0.54	4.58	—	—	0.29	2.5	—	—	**S10N04A81N**
1	0.05	—	—	—	—	0.41	3.54	—	—	0.23	1.98	**S10N06A81N**
1	0.10	0.96	8.33	1.1	9.17	—	—	0.58	5.0	—	—	**S10N04A82N**
1	0.10	—	—	—	—	0.82	7.08	—	—	0.46	3.95	**S10N06A82N**
1	0.15	1.44	12.5	1.6	13.7	—	—	0.87	7.5	—	—	**S10N04A83N**
1	0.15	—	—	—	—	1.3	10.6	—	—	0.69	5.93	**S10N06A83N**
1	0.25	2.39	20.8	2.63	22.9	—	—	1.44	12.5	—	—	**S10N04P26P**
1	0.25	—	—	—	—	2.03	17.7	—	—	1.14	9.88	**S10N06P26P**
1	0.50	4.79	41.6	5.27	45.8	—	—	2.87	25	—	—	**S10N04P51P**
1	0.50	——	—	—	—	4.07	35.4	—	—	2.27	19.8	**S10N06P51P**
1	0.75	7.19	62.4	7.9	68.7	—	—	4.31	37.5	—	—	**S10N04P76P**
1	0.75	—	—	—	—	6.1	53.1	—	—	3.41	29.6	**S10N06P76P**
1	1	9.58	83.3	10.5	91.7	—	—	5.75	50	—	—	**S10N04P01P**
1	1	—	—	—	—	8.14	70.8	—	—	4.55	39.5	**S10N06P01P**
1	1.5	14.4	125	15.8	137	—	—	8.62	75	—	—	**S10N04P16P**
1	1.5	—	—	—	—	12.2	106	—	—	6.82	59.3	**S10N06P16P**
1	2	19.2	16.7	21.1	183	—	—	11.5	100	—	—	**S10N04P02P**
1	2	—	—	—	—	16.3	142	—	—	9.10	79.2	**S10N06P02P**
1	3	28.7	249.9	31.5	275.1	—	—	17.3	150	—	—	**S10N04A03N**
1	3	—	—	—	—	24.4	212.4	—	—	13.6	118.5	**S10N06A03N**
1	5	47.9	416.5	52.5	458.5	—	—	28.7	250	—	—	**S10N04A05N**
1	5	—	—	—	—	40.7	354	—	—	22.7	197.5	**S10N06A05N**
1	7.5	71.9	624	79	687	—	—	43.1	357	—	—	**S10N04A07N**
1	7.5	—	—	—	—	61	531	—	—	34.1	296	**S10N06A07N**
Connection Diagram ②		A		A		A		B		B		

Notes

① Additional wiring trough may be required.

② Refer to **Page V2-T2-148** for buck-boost wiring diagrams.

Output voltage for lower input voltage can be found by: $\frac{\text{Rated Output Voltage}}{\text{Rated Input Voltage}}$ x Input Actual Voltage = Output New Voltage.

Output kVA available at reduced input voltage can be found by: $\frac{\text{Actual Input Voltage}}{\text{Rated Input Voltage}}$ x Output kVA = New kVA Rating.

Frame drawings/dimensions information begins on **Page V2-T2-204**.

Single-Phase 120 Volt Output Required, 60 Hz

		Input Available Voltage										
		88		95		100		104		106		
Units Required ①	Unit kVA	Output kVA	Amps	Output kVA	Amps	Output kVA	Amps	Output kVA	Amps	Output kVA	Amps	Catalog Number
1	0.05	—	—	—	—	0.25	2.09	—	—	—	—	**S10N04A81N**
1	0.05	0.14	1.15	0.19	1.56	—	—	0.33	2.70	0.38	3.13	**S10N06A81N**
1	0.10	—	—	—	—	0.50	4.17	—	—	—	—	**S10N04A82N**
1	0.10	0.28	2.29	0.38	3.12	—	—	0.65	5.41	0.75	6.25	**S10N06A82N**
1	0.15	—	—	—	—	0.75	6.25	—	—	—	—	**S10N04A83N**
1	0.15	0.41	3.44	0.56	4.69	—	—	0.98	8.12	1.12	9.37	**S10N06A83N**
1	0.25	—	—	—	—	1.25	10.4	—	—	—	—	**S10N04P26P**
1	0.25	0.687	5.73	0.937	7.81	—	—	1.62	13.5	1.87	15.6	**S10N06P26P**
1	0.50	—	—	—	—	2.5	20.8	—	—	—	—	**S10N04P51P**
1	0.50	1.37	11.5	1.87	15.6	—	—	3.25	27.1	3.75	31.2	**S10N06P51P**
1	0.75	—	—	—	—	3.75	31.2	—	—	—	—	**S10N04P76P**
1	0.75	2.06	17.2	2.82	23.4	—	—	4.87	40.6	5.62	46.8	**S10N06P76P**
1	1	—	—	—	—	5	41.7	—	——	—	—	**S10N04P01P**
1	1	2.75	22.9	3.75	31.2	—	—	6.5	54.1	7.5	62.5	**S10N06P01P**
1	1.5	—	—	—	—	7.5	62.5	—	—	—	—	**S10N04P16P**
1	1.5	4.12	34.4	5.62	46.9	—	—	9.75	81.2	11.2	93.7	**S10N06P16P**
1	2	—	—	—	—	10	83.3	—	—	—	—	**S10N04P02P**
1	2	5.5	45.8	7.5	62.5	—	—	13	108	15	125	**S10N06P02P**
1	3	—	—	—	—	15	125.1	—	—	—	—	**S10N04A03N**
1	3	8.25	68.7	11.25	93.6	—	—	19.5	162.3	22.5	187.5	**S10N06A03N**
1	5	—	—	—	—	25	208.5	—	—	—	—	**S10N04A05N**
1	5	13.75	114.5	18.75	156	—	—	32.5	270.5	37.5	312.5	**S10N06A05N**
1	7.5	—	—	—	—	37.5	312	—	—	—	—	**S10N04A07N**
1	7.5	20.6	172	28.2	234	—	—	48.7	406	56.2	468	**S10N06A07N**
Connection Diagram ②		D		B		B		C		A		

Notes

① Additional wiring trough may be required.

② Refer to **Page V2-T2-148** for buck-boost wiring diagrams.

Output voltage for lower input voltage can be found by: $\frac{\text{Rated Output Voltage}}{\text{Rated Input Voltage}}$ x Input Actual Voltage = Output New Voltage.

Output kVA available at reduced input voltage can be found by: $\frac{\text{Actual Input Voltage}}{\text{Rated Input Voltage}}$ x Output kVA = New kVA Rating.

Frame drawings/dimensions information begins on **Page V2-T2-204**.

Single-Phase 120 Volt Output Required, 60 Hz

		Input Available Voltage										
		109		132		136		144		152		
Units Required ①	Unit kVA	Output kVA	Amps	Output kVA	Amps	Output kVA	Amps	Output kVA	Amps	Output kVA	Amps	Catalog Number
1	0.05	0.5	4.17	0.55	4.58	—	—	0.3	2.5	—	—	**S10N04A81N**
1	0.05	—	—	—	—	0.43	3.54	—	—	0.24	1.98	**S10N06A81N**
1	0.10	1.0	8.33	1.1	9.17	—	—	0.6	5.0	—	—	**S10N04A82N**
1	0.10	—	—	—	—	0.85	7.08	—	—	0.48	3.95	**S10N06A82N**
1	0.15	1.5	12.5	1.6	13.7	—	—	0.9	7.5	—	—	**S10N04A83N**
1	0.15	—	—	—	—	1.27	10.6	—	—	0.71	5.93	**S10N06A83N**
1	0.25	2.5	20.8	2.75	22.9	—	—	1.5	12.5	—	—	**S10N04P26P**
1	0.25	—	—	—	—	2.12	17.7	—	—	1.19	9.88	**S10N06P26P**
1	0.50	5	41.6	5.5	45.8	—	—	3	25	—	—	**S10N04P51P**
1	0.50	—	—	—	—	4.25	35.4	—	—	2.37	19.8	**S10N06P51P**
1	0.75	7.5	62.4	8.25	68.7	—	—	4.5	37.5	—	—	**S10N04P76P**
1	0.75	—	—	—	—	6.37	53.1	—	—	3.56	29.6	**S10N06P76P**
1	1	10	83.3	11	91.7	—	—	6	50	—	—	**S10N04P01P**
1	1	—	—	—	—	8.5	70.8	—	—	4.75	39.5	**S10N06P01P**
1	1.5	15	125	16.5	137	—	—	9	75	—	—	**S10N04P16P**
1	1.5	—	—	—	—	12.7	106	—	—	7.12	59.3	**S10N06P16P**
1	2	20	167	22	183	—	—	12	100	—	—	**S10N04P02P**
1	2	—	—	—	—	17	142	—	—	9.5	79.2	**S10N06P02P**
1	3	30	249.9	33	275.1	—	—	18	150	—	—	**S10N04A03N**
1	3	—	—	—	—	25.5	212.4	—	—	14.25	118.5	**S10N06A03N**
1	5	50	416.5	55	458.5	—	—	30	250	—	—	**S10N04A05N**
1	5	—	—	—	—	42.5	354	—	—	23.7	197.5	**S10N06A05N**
1	7.5	75	624	82.5	687	—	—	45	375	—	—	**S10N04A07N**
1	7.5	—	—	—	—	63.7	531	—	—	35.6	296	**S10N06A07N**
Connection Diagram ②		A		A		A		B		B		

Notes

① Additional wiring trough may be required.

② Refer to **Page V2-T2-148** for buck-boost wiring diagrams.

Output voltage for lower input voltage can be found by: $\frac{\text{Rated Output Voltage}}{\text{Rated Input Voltage}}$ x Input Actual Voltage = Output New Voltage.

Output kVA available at reduced input voltage can be found by: $\frac{\text{Actual Input Voltage}}{\text{Rated Input Voltage}}$ x Output kVA = New kVA Rating.

Frame drawings/dimensions information begins on **Page V2-T2-204**.

Single-Phase 230 Volt Output Required, 60 Hz

		Input Available Voltage										
		199		203		207		209		216		
Units Required ①	Unit kVA	Output kVA	Amps	Output kVA	Amps	Output kVA	Amps	Output kVA	Amps	Output kVA	Amps	Catalog Number
1	0.05	—	—	—	—	0.43	1.88	0.48	2.08	—	—	**S10N04A81N**
1	0.05	0.31	1.36	0.36	1.56	—	—	—	—	0.72	3.12	**S10N06A81N**
1	0.10	—	—	—	—	0.86	3.75	0.96	4.17	—	—	**S10N04A82N**
1	0.10	0.62	2.71	0.72	3.12	—	—	—	—	1.44	6.25	**S10N06A82N**
1	0.15	—	—	—	—	1.29	5.62	1.44	6.25	—	—	**S10N04A83N**
1	0.15	0.93	4.06	1.08	4.69	—	—	—	—	2.16	9.37	**S10N06A83N**
1	0.25	—	—	—	—	2.15	9.37	2.39	10.4	—	—	**S10N04P26P**
1	0.25	1.55	6.77	1.8	7.81	—	—	—	—	3.59	15.6	**S10N06P26P**
1	0.50	—	—	—	—	4.31	18.7	4.79	20.8	—	—	**S10N04P51P**
1	0.50	3.11	13.5	3.6	15.6	—	—	—	—	7.19	31.2	**S10N06P51P**
1	0.75	—	—	—	—	6.46	28.2	7.19	31.2	—	—	**S10N04P76P**
1	0.75	4.66	20.3	5.4	23.4	—	—	—	—	10.8	46.8	**S10N06P76P**
1	1	—	—	—	—	8.62	37.5	9.58	41.7	—	—	**S10N04P01P**
1	1	6.23	27.1	7.2	31.2	—	—	—	—	14.4	62.5	**S10N06P01P**
1	1.5	—	—	—	—	12.9	56.2	14.4	62.5	—	—	**S10N04P16P**
1	1.5	9.34	40.6	10.8	46.9	—	—	—	—	21.6	93.7	**S10N06P16P**
1	2	—	—	—	—	17.2	75	19.2	83.3	—	—	**S10N04P02P**
1	2	12.5	54.2	14.4	62.5	—	—	—	—	28.7	125	**S10N06P02P**
1	3	—	—	—	—	25.8	112.5	28.7	125.1	—	—	**S10N04A03N**
1	3	18.6	81.3	21.6	93.6	—	—	—	—	43.2	187.5	**S10N06A03N**
1	5	—	—	—	—	43.1	187.5	47.9	208.5	—	—	**S10N04A05N**
1	5	31.1	135.5	36	156	—	—	—	—	72	312.5	**S10N06A05N**
1	7.5	—	—	—	—	64.6	282	71.9	312	—	—	**S10N04A07N**
1	7.5	46.6	203	54	234	—	—	—	—	108	468	**S10N06A07N**
Connection Diagram ②		G		F		G		F		E		

Notes

① Additional wiring trough may be required.

② Refer to **Page V2-T2-148** for buck-boost wiring diagrams.

Output voltage for lower input voltage can be found by: $\frac{\text{Rated Output Voltage}}{\text{Rated Input Voltage}}$ x Input Actual Voltage = Output New Voltage.

Output kVA available at reduced input voltage can be found by: $\frac{\text{Actual Input Voltage}}{\text{Rated Input Voltage}}$ x Output kVA = New kVA Rating.

Frame drawings/dimensions information begins on **Page V2-T2-204**.

Single-Phase 230 Volt Output Required, 60 Hz

		Input Available Voltage										
		219		242		246		253		260		
Units Required ①	Unit kVA	Output kVA	Amps	Output kVA	Amps	Output kVA	Amps	Output kVA	Amps	Output kVA	Amps	Catalog Number
1	0.05	0.96	4.16	1.0	4.38	—	—	0.53	2.29	—	—	**S10N04A81N**
1	0.05	—	—	—	—	0.77	3.34	—	—	0.41	1.77	**S10N06A81N**
1	0.10	1.92	8.33	2.01	8.75	—	—	1.05	4.58	—	—	**S10N04A82N**
1	0.10	—	—	—	—	1.53	6.67	—	—	0.82	3.54	**S10N06A82N**
1	0.15	2.87	12.5	3.02	13.1	—	—	1.58	6.87	—	—	**S10N04A83N**
1	0.15	—	—	—	—	2.3	10.0	—	—	1.22	5.31	**S10N06A83N**
1	0.25	4.79	20.8	5.03	21.9	—	—	2.63	11.5	—	—	**S10N04P26P**
1	0.25	—	—	—	—	3.83	16.7	—	—	2.04	8.85	**S10N06P26P**
1	0.50	9.58	41.6	10.1	43.7	—	—	5.27	22.9	—	—	**S10N04P51P**
1	0.50	—	—	—	—	7.67	33.3	—	—	4.07	17.7	**S10N06P51P**
1	0.75	14.4	62.4	15.1	65.6	—	—	7.9	34.4	—	—	**S10N04P76P**
1	0.75	—	—	—	—	11.5	50	—	—	6.11	26.6	**S10N06P76P**
1	1	19.2	83.3	20.1	87.5	—	—	10.5	45.8	—	—	**S10N04P01P**
1	1	—	—	—	—	15.3	66.7	—	—	8.15	35.4	**S10N06P01P**
1	1.5	28.7	125	30.2	131	—	—	15.8	68.7	—	—	**S10N04P16P**
1	1.5	—	—	—	—	23	100	—	—	12.2	53.1	**S10N06P16P**
1	2	38.3	167	40.2	175	—	—	21.1	91.7	—	—	**S10N04P02P**
1	2	—	—	—	—	30.7	133	—	—	16.3	70.8	**S10N06P02P**
1	3	57.6	249.9	60.3	262.5	—	—	31.5	137.4	—	—	**S10N04A03N**
1	3	—	—	—	—	45.9	200.1	—	—	24.4	106.2	**S10N06A03N**
1	5	96	416.5	100.5	437.5	—	—	52.5	229	—	—	**S10N04A05N**
1	5	—	—	—	—	76.5	333.5	—	—	40.7	177	**S10N06A05N**
1	7.5	144	624	151	656	—	—	79	344	—	—	**S10N04A07N**
1	7.5	—	—	—	—	115	500	—	—	61.1	266	**S10N06A07N**
Connection Diagram ②		E		E		E		F		F		

Notes

① Additional wiring trough may be required.

② Refer to **Page V2-T2-148** for buck-boost wiring diagrams.

Output voltage for lower input voltage can be found by: $\frac{\text{Rated Output Voltage}}{\text{Rated Input Voltage}}$ x Input Actual Voltage = Output New Voltage.

Output kVA available at reduced input voltage can be found by: $\frac{\text{Actual Input Voltage}}{\text{Rated Input Voltage}}$ x Output kVA = New kVA Rating.

Frame drawings/dimensions information begins on **Page V2-T2-204**.

Single-Phase 240 Volt Output Required, 60 Hz

		Input Available Voltage										
		208		212		216		218		225		
Units Required ①	Unit kVA	Output kVA	Amps	Output kVA	Amps	Output kVA	Amps	Output kVA	Amps	Output kVA	Amps	Catalog Number
1	0.05	—	—	—	—	0.45	1.88	0.5	2.08	—	—	**S10N04A81N**
1	0.05	0.32	1.35	0.38	1.56	—	—	—	—	0.75	3.12	**S10N06A81N**
1	0.10	—	—	—	—	0.9	3.75	1.0	4.17	—	—	**S10N04A82N**
1	0.10	0.65	2.71	0.75	3.12	—	—	—	—	1.5	6.25	**S10N06A82N**
1	0.15	—	—	—	—	1.35	5.62	1.5	6.25	—	—	**S10N04A83N**
1	0.15	0.98	4.06	1.12	4.69	—	—	—	—	2.25	9.37	**S10N06A83N**
1	0.25	—	—	—	—	2.25	9.37	2.5	10.4	—	—	**S10N04P26P**
1	0.25	1.62	6.77	1.87	7.81	—	—	—	—	3.75	15.6	**S10N06P26P**
1	0.50	—	—	—	—	4.5	18.7	5	20.8	—	—	**S10N04P51P**
1	0.50	3.25	13.5	3.75	15.6	—	—	—	—	7.5	31.2	**S10N06P51P**
1	0.75	—	—	—	—	6.75	28.2	7.5	31.2	—	—	**S10N04P76P**
1	0.75	4.87	20.3	5.62	23.4	—	—	—	—	11.2	46.8	**S10N06P76P**
1	1	—	—	—	—	9	37.5	10	41.7	—	—	**S10N04P01P**
1	1	6.5	27.1	7.5	31.2	—	—	—	—	15	62.5	**S10N06A01**
1	1.5	—	—	—	—	13.5	56.2	15	62.5	—	—	**S10N04P16P**
1	1.5	9.75	40.6	11.2	46.9	—	—	—	—	22.5	93.7	**S10N06P16P**
1	2	—	—	—	—	18	75	20	83.3	—	—	**S10N04P02P**
1	2	13	54.2	15	62.5	—	—	—	—	30	125	**S10N06P02P**
1	3	—	—	—	—	27	112.5	30	125.1	—	—	**S10N04A03N**
1	3	19.5	81.3	22.5	93.6	—	—	—	—	45	187.5	**S10N06A03N**
1	5	—	—	—	—	45	187	50	208	—	—	**S10N04A05N**
1	5	32.5	135	37.5	156	—	—	—	—	75	312	**S10N06A05N**
1	7.5	—	—	—	—	67.5	282	75	312	—	—	**S10N04A07N**
1	7.5	48.7	203	56.2	234	—	—	—	—	112	468	**S10N06A07N**
Connection Diagram ②		G		F		G		F		E		

Notes

① Additional wiring trough may be required.

② Refer to **Page V2-T2-148** for buck-boost wiring diagrams.

Output voltage for lower input voltage can be found by: $\frac{\text{Rated Output Voltage}}{\text{Rated Input Voltage}}$ x Input Actual Voltage = Output New Voltage.

Output kVA available at reduced input voltage can be found by: $\frac{\text{Actual Input Voltage}}{\text{Rated Input Voltage}}$ x Output kVA = New kVA Rating.

Frame drawings/dimensions information begins on **Page V2-T2-204**.

Single-Phase 240 Volt Output Required, 60 Hz

		Input Available Voltage										
		229		252		256		264		272		
Units Required ①	Unit kVA	Output kVA	Amps	Output kVA	Amps	Output kVA	Amps	Output kVA	Amps	Output kVA	Amps	Catalog Number
1	0.05	1.0	4.16	1.05	4.38	—	—	0.55	2.29	—	—	**S10N04A81N**
1	0.05	—	—	—	—	0.8	3.33	—	—	0.42	1.77	**S10N06A81N**
1	0.10	2.0	8.33	2.1	8.75	—	—	1.1	4.58	—	—	**S10N04A82N**
1	0.10	—	—	—	—	1.6	6.67	—	—	0.85	3.54	**S10N06A82N**
1	0.15	3.0	12.5	3.15	13.1	—	—	1.65	6.87	—	—	**S10N04A83N**
1	0.15	—	—	—	—	2.4	10.0	—	—	1.27	5.31	**S10N06A83N**
1	0.25	5	20.8	5.25	21.9	—	—	2.75	11.5	—	—	**S10N04P26P**
1	0.25	—	—	—	—	4	16.7	—	—	2.12	8.85	**S10N06P26P**
1	0.50	10	41.6	10.5	43.7	—	—	5.5	22.9	—	—	**S10N04P51P**
1	0.50	—	—	—	—	8	33.3	—	—	4.25	17.7	**S10N06P51P**
1	0.75	15	62.4	15.7	65.6	—	—	8.25	34.4	—	—	**S10N04P76P**
1	0.75	—	—	—	—	12	50	—	—	6.37	26.6	**S10N06P76P**
1	1	20	83.3	21	87.5	—	—	11	45.8	—	—	**S10N04P01P**
1	1	—	—	—	—	16	66.7	—	—	8.5	35.4	**S10N06P01P**
1	1.5	30	125	31.5	131	—	—	16.5	68.7	—	—	**S10N04P16P**
1	1.5	—	—	—	—	24	100	—	—	12.7	53.1	**S10N06P16P**
1	2	40	167	42	175	—	—	22	91.7	—	—	**S10N04P02P**
1	2	—	—	—	—	32	133	—	—	17	70.8	**S10N06P02P**
1	3	60	249.9	63	262.5	—	—	33	137.4	—	—	**S10N04A03N**
1	3	—	—	—	—	48	200.1	—	—	25.5	106.2	**S10N06A03N**
1	5	100	416.5	105	437.5	—	—	55	229	—	—	**S10N04A05N**
1	5	—	—	—	—	80	333	—	—	42.5	177	**S10N06A05N**
1	7.5	150	624	157	656	—	—	82.5	344	—	—	**S10N04A07N**
1	7.5	—	—	—	—	120	500	—	—	63.7	266	**S10N06A07N**
Connection Diagram ②		E		E		E		F		F		

Notes

① Additional wiring trough may be required.

② Refer to **Page V2-T2-148** for buck-boost wiring diagrams.

Output voltage for lower input voltage can be found by: $\frac{\text{Rated Output Voltage}}{\text{Rated Input Voltage}}$ x Input Actual Voltage = Output New Voltage.

Output kVA available at reduced input voltage can be found by: $\frac{\text{Actual Input Voltage}}{\text{Rated Input Voltage}}$ x Output kVA = New kVA Rating.

Frame drawings/dimensions information begins on **Page V2-T2-204**.

Three-Phase Open Delta Connection 230 Volt Output Required, 60 Hz

		Input Available Voltage										
		199		203		207		209		216		
Units Required ①	Unit kVA	Output kVA	Amps	Output kVA	Amps	Output kVA	Amps	Output kVA	Amps	Output kVA	Amps	Catalog Number
2	0.05	—	—	—	—	0.75	1.87	0.83	2.08	—	—	**S10N04A81N**
2	0.05	0.54	1.35	0.62	1.56	—	—	—	—	1.24	3.12	**S10N06A81N**
2	0.10	—	—	—	—	1.49	3.75	1.66	4.17	—	—	**S10N04A82N**
2	0.10	1.08	2.71	1.24	3.12	—	—	—	—	2.49	6.25	**S10N06A82N**
2	0.15	—	—	—	—	2.24	5.62	2.49	6.25	—	—	**S10N04A83N**
2	0.15	1.62	4.06	1.87	4.69	—	—	—	—	3.73	9.37	**S10N06A83N**
2	0.25	—	—	—	—	3.3	9.37	4.15	10.4	—	—	**S10N04P26P**
2	0.25	2.7	6.77	3.11	7.81	—	—	—	—	6.22	15.6	**S10N06P26P**
2	0.50	—	—	—	—	7.47	18.7	8.3	20.8	—	—	**S10N04P51P**
2	0.50	5.39	13.5	6.22	15.6	—	—	—	—	12.4	31.2	**S10N06P51P**
2	0.75	—	—	—	—	11.2	28.2	12.4	31.2	—	—	**S10N04P76P**
2	0.75	8.09	20.3	9.33	23.4	—	—	—	—	18.7	46.8	**S10N06P76P**
2	1	—	—	—	—	14.9	37.5	16.6	41.7	—	—	**S10N04P01P**
2	1	10.8	27.1	12.4	31.2	—	—	—	—	24.9	62.5	**S10N06P01P**
2	1.5	—	—	—	—	22.4	56.2	24.9	62.5	—	—	**S10N04P16P**
2	1.5	16.2	40.6	18.7	46.9	—	—	—	—	37.3	93.7	**S10N06P16P**
2	2	—	—	—	—	29.9	75	33.2	83.3	—	—	**S10N04P02P**
2	2	21.6	54.2	24.9	62.5	—	—	—	—	49.8	125	**S10N06P02P**
2	3	—	—	—	—	44.7	112.5	49.8	125.1	—	—	**S10N04A03N**
2	3	32.4	81.3	32.7	93.6	—	—	—	—	74.7	187.5	**S10N06A03N**
2	5	—	—	—	—	74.7	187	83	208	—	—	**S10N04A05N**
2	5	53.9	135	62.2	156	—	—	—	—	124	312.5	**S10N06A05N**
2	7.5	—	—	—	—	112	282	124	312	—	—	**S10N04A07N**
2	7.5	80.9	203	93.3	234	—	—	—	—	187	468	**S10N06A07N**
Connection Diagram ②		L		K		L		K		I		

Notes

① Additional wiring trough may be required.

② Refer to **Page V2-T2-148** for buck-boost wiring diagrams.

Output voltage for lower input voltage can be found by: $\frac{\text{Rated Output Voltage}}{\text{Rated Input Voltage}}$ x Input Actual Voltage = Output New Voltage.

Output kVA available at reduced input voltage can be found by: $\frac{\text{Actual Input Voltage}}{\text{Rated Input Voltage}}$ x Output kVA = New kVA Rating.

Frame drawings/dimensions information begins on **Page V2-T2-204**.

Three-Phase Open Delta Connection 230 Volt Output Required, 60 Hz

		Input Available Voltage										
		219		242		246		253		260		
Units Required ①	Unit kVA	Output kVA	Amps	Output kVA	Amps	Output kVA	Amps	Output kVA	Amps	Output kVA	Amps	Catalog Number
2	0.05	1.66	4.17	1.74	4.37	—	—	0.91	2.29	—	—	**S10N04A81N**
2	0.05	—	—	—	—	1.33	3.33	—	—	0.70	1.77	**S10N06A81N**
2	0.10	3.32	8.33	3.48	8.75	—	—	1.83	4.58	—	—	**S10N04A82N**
2	0.10	—	—	—	—	2.65	6.67	—	—	1.41	3.54	**S10N06A82N**
2	0.15	4.98	12.5	5.23	13.1	—	—	2.74	6.87	—	—	**S10N04A83N**
2	0.15	—	—	—	—	3.98	10.0	—	—	2.12	5.13	**S10N06A83N**
2	0.25	8.3	20.8	8.71	21.9	—	—	4.56	11.5	—	—	**S10N04P26P**
2	0.25	—	—	—	—	6.64	16.7	—	—	3.52	8.85	**S10N06P26P**
2	0.50	16.6	41.7	17.4	43.7	—	—	9.73	22.9	—	—	**S10N04P51P**
2	0.50	—	—	—	—	13.3	33.3	—	—	7.05	17.7	**S10N06P51P**
2	0.75	24.9	62.4	26.1	65.6	—	—	13.7	34.4	—	—	**S10N04P76P**
2	0.75	—	—	—	—	19.9	50	—	—	10.6	26.6	**S10N06P76P**
2	1	33.2	83.3	34.8	87.5	—	—	18.3	45.8	—	—	**S10N04P01P**
2	1	—	—	—	—	26.5	66.7	—	—	14.1	35.4	**S10N06P01P**
2	1.5	49.8	125	52.3	131	—	—	27.4	68.7	—	—	**S10N04P16P**
2	1.5	—	—	—	—	39.8	100	—	—	21.2	53.1	**S10N06P16P**
2	2	66.4	167	69.7	175	—	—	36.5	91.7	—	—	**S10N04P02P**
2	2	—	—	—	—	53.1	133	—	—	28.2	70.8	**S10N06P02P**
2	3	99.6	249.9	104.4	262.5	—	—	54.9	137.4	—	—	**S10N04A03N**
2	3	—	—	—	—	79.5	200	—	—	42.3	106.2	**S10N06A03N**
2	5	166	417	174	437	—	—	91.3	229	—	—	**S10N04A05N**
2	5	—	—	—	—	133	333	—	—	70.5	177	**S10N06A05N**
2	7.5	249	624	261	656	—	—	137	344	—	—	**S10N04A07N**
2	7.5	—	—	—	—	199	500	—	—	106	266	**S10N06A07N**
Connection Diagram ②		I		I		I		K		K		

Notes

① Additional wiring trough may be required.

② Refer to **Page V2-T2-148** for buck-boost wiring diagrams.

Output voltage for lower input voltage can be found by: $\frac{\text{Rated Output Voltage}}{\text{Rated Input Voltage}}$ x Input Actual Voltage = Output New Voltage.

Output kVA available at reduced input voltage can be found by: $\frac{\text{Actual Input Voltage}}{\text{Rated Input Voltage}}$ x Output kVA = New kVA Rating.

Frame drawings/dimensions information begins on **Page V2-T2-204**.

Three-Phase Open Delta Connection 240 Volt Output Required, 60 Hz

		Input Available Voltage										
		208		212		216		218		225		
Units Required ①	Unit kVA	Output kVA	Amps	Output kVA	Amps	Output kVA	Amps	Output kVA	Amps	Output kVA	Amps	Catalog Number
2	0.05	—	—	—	—	0.73	1.87	0.87	2.08	—	—	**S10N04A81N**
2	0.05	0.56	1.35	0.65	1.56	—	—	—	—	1.3	3.12	**S10N06A81N**
2	0.10	—	—	—	—	1.56	3.75	1.73	4.17	—	—	**S10N04A82N**
2	0.10	1.13	2.71	1.3	3.12	—	—	—	—	2.6	6.25	**S10N06A82N**
2	0.15	—	—	—	—	2.34	5.62	2.6	6.25	—	—	**S10N04A83N**
2	0.15	1.69	4.06	1.95	4.69	—	—	—	—	3.9	9.37	**S10N06A83N**
2	0.25	——	—	—	—	3.9	9.37	4.33	10.4	—	—	**S10N04P26P**
2	0.25	2.81	6.77	3.25	7.81	—	—	—	—	6.49	15.6	**S10N06P26P**
2	0.50	—	—	—	—	7.79	18.7	8.66	20.8	—	—	**S10N04P51P**
2	0.50	5.63	13.5	6.5	15.6	——	—	—	—	13	31.2	**S10N06P51P**
2	0.75	—	—	—	—	11.7	28.2	13	31.2	—	—	**S10N04P76P**
2	0.75	8.44	20.3	9.75	23.4	—	—	—	—	19.5	46.8	**S10N06P76P**
2	1	—	—	—	—	15.6	37.5	17.3	41.7	—	—	**S10N04P01P**
2	1	11.3	27.1	13	31.2	—	—	—	—	26	62.5	**S10N06P01P**
2	1.5	—	—	—	—	23.4	56.2	26	62.5	—	—	**S10N04P16P**
2	1.5	16.9	40.6	19.5	46.9	—	—	—	—	39	93.7	**S10N06P16P**
2	2	—	—	—	—	31.2	75	34.6	83.3	—	—	**S10N04P02P**
2	2	22.5	54.2	26	62.5	—	—	—	—	52	125	**S10N06P02P**
2	3	—	—	—	—	46.8	112.5	51.9	125.1	—	—	**S10N04A03N**
2	3	33.9	81.3	39	93.6	—	—	—	—	78	187.5	**S10N06A03N**
2	5	—	—	—	—	77.9	187	86.6	208	—	—	**S10N04A05N**
2	5	56.3	135	65	156	—	—	—	—	130	312	**S10N06A05N**
2	7.5	—	—	—	—	117	282	130	312	—	—	**S10N04A07N**
2	7.5	84.4	203	97.5	234	—	—	—	—	195	468	**S10N06A07N**
Connection Diagram ②		L		K		L		K		I		

Notes

① Additional wiring trough may be required.

② Refer to **Page V2-T2-148** for buck-boost wiring diagrams.

Output voltage for lower input voltage can be found by: $\frac{\text{Rated Output Voltage}}{\text{Rated Input Voltage}}$ x Input Actual Voltage = Output New Voltage.

Output kVA available at reduced input voltage can be found by: $\frac{\text{Actual Input Voltage}}{\text{Rated Input Voltage}}$ x Output kVA = New kVA Rating.

Frame drawings/dimensions information begins on **Page V2-T2-204**.

Three-Phase Open Delta Connection 240 Volt Output Required, 60 Hz

		Input Available Voltage										
		229		252		256		264		272		
Units Required ①	Unit kVA	Output kVA	Amps	Output kVA	Amps	Output kVA	Amps	Output kVA	Amps	Output kVA	Amps	Catalog Number
2	0.05	1.73	4.16	1.82	4.37	—	—	0.95	2.29	—	—	**S10N04A81N**
2	0.05	—	—	—	—	1.38	3.33	—	—	0.74	1.77	**S10N06A81N**
2	0.10	3.46	8.33	3.64	8.75	—	—	1.91	4.58	—	—	**S10N04A82N**
2	0.10	—	—	—	—	2.77	6.67	—	—	1.47	3.54	**S10N06A82N**
2	0.15	5.19	12.5	5.45	13.1	—	—	2.86	6.87	—	—	**S10N04A83N**
2	0.15	—	—	—	—	4.15	10.0	—	—	2.21	5.31	**S10N06A83N**
2	0.25	8.66	20.8	9.09	21.9	—	—	4.76	11.5	—	—	**S10N04P26P**
2	0.25	—	—	—	—	6.92	16.7	—	—	3.68	8.85	**S10N06P26P**
2	0.50	17.3	41.6	18.2	43.7	—	—	9.53	22.9	—	—	**S10N04P51P**
2	0.50	—	—	—	—	13.8	33.3	—	—	7.36	17.7	**S10N06P51P**
2	0.75	26	62.4	27.3	65.6	—	—	14.3	34.4	—	—	**S10N04P76P**
2	0.75	—	—	—	—	20.8	50	—	—	11	26.6	**S10N06P76P**
2	1	34.6	83.3	36.4	87.5	—	—	19.1	45.8	—	—	**S10N04P01P**
2	1	—	—	—	—	27.7	66.7	—	—	14.7	35.4	**S10N06P01P**
2	1.5	51.9	125	54.5	131	—	—	28.6	68.7	—	—	**S10N04P16P**
2	1.5	—	—	—	—	41.5	100	—	—	22.1	53.1	**S10N06P16P**
2	2	69.3	167	72.7	175	—	—	38.1	91.7	—	—	**S10N04P02P**
2	2	—	—	—	—	55.4	133	—	—	29.4	70.8	**S10N06P02P**
2	3	103.8	249.9	109.2	262.5	—	—	57.3	137.4	—	—	**S10N04A03N**
2	3	—	—	—	—	83.1	200	—	—	44.1	106.2	**S10N06A03N**
2	5	173	416	182	437	—	—	95.3	229	—	—	**S10N04A05N**
2	5	—	—	—	—	138	333	—	—	73.6	177	**S10N06A05N**
2	7.5	260	624	273	656	—	—	143	344	—	—	**S10N04A07N**
2	7.5	—	—	—	—	208	500	—	—	110	266	**S10N06A07N**
Connection Diagram ②		I		I		I		K		K		

Notes

① Additional wiring trough may be required.

② Refer to **Page V2-T2-148** for buck-boost wiring diagrams.

Output voltage for lower input voltage can be found by: $\frac{\text{Rated Output Voltage}}{\text{Rated Input Voltage}}$ x Input Actual Voltage = Output New Voltage.

Output kVA available at reduced input voltage can be found by: $\frac{\text{Actual Input Voltage}}{\text{Rated Input Voltage}}$ x Output kVA = New kVA Rating.

Frame drawings/dimensions information begins on **Page V2-T2-204**.

WARNING! Three-phase autotransformers should never be used to obtain four-wire output with three-wire input. Four-wire output requires four-wire wye input.

On all wye connections, the source neutral must be present and connected to the transformer bank. If source neutral is not present, do not use a wye connection.

Three-Phase Wye Connection 208 Volt Output Required, 60 Hz

		Input Available Voltage										
		152		164		173		180		184		
Units Required ①	Unit kVA	Output kVA	Amps	Output kVA	Amps	Output kVA	Amps	Output kVA	Amps	Output kVA	Amps	Catalog Number
3	0.05	—	—	—	—	0.75	2.08	—	—	—	—	**S10N04A81N**
3	0.05	0.41	1.15	0.56	1.56	—	—	0.98	2.71	1.12	3.12	**S10N06A81N**
3	0.10	—	—	—	—	1.50	4.17	—	—	—	—	**S10N04A82N**
3	0.10	0.82	2.29	1.12	3.12	—	—	1.95	5.41	2.25	6.25	**S10N06A82N**
3	0.15	—	—	—	—	2.25	6.25	—	—	—	—	**S10N04A83N**
3	0.15	1.24	3.44	1.69	4.69	—	—	2.92	8.12	3.73	9.37	**S10N06A83N**
3	0.25	—	—	—	—	3.75	10.4	—	—	—	—	**S10N04P26P**
3	0.25	2.06	5.73	2.81	7.81	—	—	4.87	13.5	5.62	15.6	**S10N06P26P**
3	0.50	—	—	—	—	7.5	20.8	—	—	—	—	**S10N04P51P**
3	0.50	4.12	11.5	5.62	15.6	—	—	9.75	27.1	11.2	31.2	**S10N06P51P**
3	0.75	—	—	—	—	11.2	31.2	—	—	—	—	**S10N04P76P**
3	0.75	6.19	17.2	8.44	23.4	—	—	14.6	40.6	16.8	46.8	**S10N06P76P**
3	1	—	—	—	—	15	41.7	—	—	—	—	**S10N04P01P**
3	1	8.25	22.9	11.2	31.2	—	—	19.5	54.1	22.5	62.5	**S10N06P01P**
3	1.5	—	—	—	—	22.5	62.5	—	—	—	—	**S10N04P16P**
3	1.5	12.4	34.4	16.9	46.9	—	—	29.2	81.2	33.7	93.7	**S10N06P16P**
3	2	—	—	—	—	30	83.3	—	—	—	—	**S10N04P02P**
3	2	16.5	45.8	22.5	62.5	—	—	39	108	45	125	**S10N06P02P**
3	3	—	—	—	—	45	125	—	—	—	—	**S10N04A03N**
3	3	24.7	68.7	33.6	93.6	—	—	58.5	162.3	67.5	187.5	**S10N06A03N**
3	5	—	—	—	—	75	208	—	—	—	—	**S10N04A05N**
3	5	41.2	115	56.2	156	—	—	97.5	271	112	312	**S10N06A05N**
3	7.5	—	—	—	—	112	312	—	—	—	—	**S10N04A07N**
3	7.5	61.9	172	84.4	234	—	—	146	406	168	468	**S10N06A07N**
Connection Diagram ②		P		N		N		O		M		

Notes

① Additional wiring trough may be required.

② Refer to **Page V2-T2-148** for buck-boost wiring diagrams.

Output voltage for lower input voltage can be found by: $\frac{\text{Rated Output Voltage}}{\text{Rated Input Voltage}}$ x Input Actual Voltage = Output New Voltage.

Output kVA available at reduced input voltage can be found by: $\frac{\text{Actual Input Voltage}}{\text{Rated Input Voltage}}$ x Output kVA = New kVA Rating.

Frame drawings/dimensions information begins on **Page V2-T2-204**.

WARNING! Three-phase autotransformers should never be used to obtain four-wire output with three-wire input. Four-wire output requires four-wire wye input.

On all wye connections, the source neutral must be present and connected to the transformer bank. If source neutral is not present, do not use a wye connection.

Three-Phase Wye Connection 208 Volt Output Required, 60 Hz

		Input Available Voltage										
		189		229		236		250		264		
Units Required ①	Unit kVA	Output kVA	Amps	Output kVA	Amps	Output kVA	Amps	Output kVA	Amps	Output kVA	Amps	Catalog Number
3	0.05	1.5	4.16	1.65	4.58	—	—	0.9	2.5	—	—	**S10N04A81N**
3	0.05	—	—	—	—	1.27	3.54	—	—	0.71	1.98	**S10N06A81N**
3	0.10	3.0	8.33	3.3	9.17	—	—	1.8	5.0	—	—	**S10N04A82N**
3	0.10	—	—	—	—	2.55	7.08	—	—	1.42	3.95	**S10N06A82N**
3	0.15	4.5	12.5	4.95	13.7	—	—	2.7	7.5	—	—	**S10N04A83N**
3	0.15	—	—	—	—	3.82	10.6	—	—	2.14	5.93	**S10N06A83N**
3	0.25	7.5	20.8	8.25	22.9	—	—	4.5	12.5	—	—	**S10N04P26P**
3	0.25	—	—	—	—	6.35	17.7	—	—	3.56	9.88	**S10N06P26P**
3	0.50	15	41.6	16.5	45.8	—	—	9	25	—	—	**S10N04P51P**
3	0.50	—	—	—	—	12.7	35.4		—	7.12	19.3	**S10N06P51P**
3	0.75	22.5	62.4	24.7	68.7	—	—	13.5	37.5	—	—	**S10N04P76P**
3	0.75	—	—	—	—	19	53.1	—	—	10.7	29.3	**S10N06P76P**
3	1	30	83.3	33	91.7	—	—	18	50	—	—	**S10N04P01P**
3	1	—	—	—	—	25.5	70.8	—	—	14.2	39.5	**S10N06P01P**
3	1.5	45	125	49.5	137	—	—	27	75	—	—	**S10N04P16P**
3	1.5	—	—	—	—	38.2	106	—	—	21.4	59.3	**S10N06P16P**
3	2	60	167	66	183	—	—	361	100	—	—	**S10N04P02P**
3	2	—	—	—	—	51	142	—	—	28.5	79.2	**S10N06P02P**
3	3	90	249.9	99	275.1	—	—	54	150	—	—	**S10N04A03N**
3	3	—	—	—	—	76.5	212.4	—	—	46.2	118.5	**S10N06A03N**
3	5	150	416	165	458	—	—	90	250	—	—	**S10N04A05N**
3	5	—	—	—	—	127	354	—	—	71.2	198	**S10N06A05N**
3	7.5	225	624	274	687	—	—	135	375	—	—	**S10N04A07N**
3	7.5	—	—	—	—	190	531	—	—	107	293	**S10N06A07N**
Connection Diagram ②		M		M		M		N		N		

Notes

① Additional wiring trough may be required.

② Refer to **Page V2-T2-148** for buck-boost wiring diagrams.

Output voltage for lower input voltage can be found by: $\frac{\text{Rated Output Voltage}}{\text{Rated Input Voltage}}$ x Input Actual Voltage = Output New Voltage.

Output kVA available at reduced input voltage can be found by: $\frac{\text{Actual Input Voltage}}{\text{Rated Input Voltage}}$ x Output kVA = New kVA Rating.

Frame drawings/dimensions information begins on **Page V2-T2-204**.

WARNING! Three-phase autotransformers should never be used to obtain four-wire output with three-wire input. Four-wire output requires four-wire wye input.

2 On all wye connections, the source neutral must be present and connected to the transformer bank. If source neutral is not present, do not use a wye connection.

Three-Phase Wye Connection 230 Volt Output Required, 60 Hz

		Input Available Voltage										
		183		192		199		208		218		
Units Required ①	Unit kVA	Output kVA	Amps	Output kVA	Amps	Output kVA	Amps	Output kVA	Amps	Output kVA	Amps	Catalog Number
3	0.05	—	—	0.83	2.08	—	—	1.65	4.58	1.66	4.17	**S10N04A81N**
3	0.05	0.62	1.56	—	—	0.54	1.35	—	—	—	—	**S10N06A81N**
3	0.10	—	—	1.66	4.17	—	—	3.3	9.17	3.32	8.35	**S10N04A82N**
3	0.10	1.25	3.12	—	—	1.08	2.71	—	—	—	—	**S10N06A82N**
3	0.15	—	—	2.49	6.25	—	—	4.95	13.7	4.98	12.5	**S10N04A83N**
3	0.15	1.87	4.69	—	—	1.62	4.06	—	—	—	—	**S10N06A83N**
3	0.25	—	—	4.15	10.4	—	—	8.2	22.9	8.3	20.9	**S10N04P26P**
3	0.25	3.11	7.81	—	—	2.70	6.77	—	—	—	—	**S10N06P26P**
3	0.50	—	—	8.3	20.8	—	—	16.5	45.8	16.6	41.7	**S10N04P51P**
3	0.50	6.22	15.6	—	—	5.39	13.5	—	—	—	—	**S10N06P51P**
3	0.75	—	—	12.4	31.2	—	—	24.7	68.8	24.9	62.6	**S10N04P76P**
3	0.75	9.33	23.4	—	—	8.09	20.3	—	—	—	—	**S10N06P76P**
3	1	—	—	16.6	41.7	—	—	33	91.7	33.2	83.5	**S10N04P01P**
3	1	12.5	31.2	—	—	10.8	27.1	—	—	—	—	**S10N06P01P**
3	1.5	—	—	24.9	62.5	—	—	49.5	137	49.8	125	**S10N04P16P**
3	1.5	18.7	46.9	—	—	16.2	40.6	—	—	—	—	**S10N06P16P**
3	2	—	—	33.2	83.3	—	—	66	183	66.4	167	**S10N04P02P**
3	2	24.9	62.5	—	—	21.6	54.2	—	—	—	—	**S10N06P02P**
3	3	—	—	49.8	125.1	—	—	99	275	99.6	250.5	**S10N04A03N**
3	3	37.5	93.6	—	—	32.4	81.3	—	—	—	—	**S10N06A03N**
3	5	—	—	83	208	—	—	165	458	166	417	**S10N04A05N**
3	5	62.2	156	—	—	53.9	135	—	—	—	—	**S10N06A05N**
3	7.5	—	—	124	312	—	—	247	688	249	626	**S10N04A07N**
3	7.5	93.3	234	—	—	80.9	203	—	—	—	—	**S10N06A07N**
Connection Diagram ②		N		N		S		M		Q		

Notes

① Additional wiring trough may be required.

② Refer to **Page V2-T2-148** for buck-boost wiring diagrams.

Output voltage for lower input voltage can be found by: $\frac{\text{Rated Output Voltage}}{\text{Rated Input Voltage}}$ x Input Actual Voltage = Output New Voltage.

Output kVA available at reduced input voltage can be found by: $\frac{\text{Actual Input Voltage}}{\text{Rated Input Voltage}}$ x Output kVA = New kVA Rating.

Frame drawings/dimensions information begins on **Page V2-T2-204**.

WARNING! Three-phase autotransformers should never be used to obtain four-wire output with three-wire input. Four-wire output requires four-wire wye input.

On all wye connections, the source neutral must be present and connected to the transformer bank. If source neutral is not present, do not use a wye connection.

Three-Phase Wye Connection 230 Volt Output Required, 60 Hz

		Input Available Voltage										
		242		245		253		260		265		
Units Required ①	Unit kVA	Output kVA	Amps	Output kVA	Amps	Output kVA	Amps	Output kVA	Amps	Output kVA	Amps	Catalog Number
3	0.05	1.74	4.37	—	—	0.91	2.29	—	—	—	—	**S10N04A81N**
3	0.05	—	—	1.33	3.33	—	—	0.70	1.77	0.62	1.56	**S10N06A81N**
3	0.10	3.48	8.75	—	—	1.83	4.58	—	—	—	—	**S10N04A82N**
3	0.10	—	—	2.65	6.67	—	—	1.41	3.54	1.25	3.12	**S10N06A82N**
3	0.15	5.23	13.1	—	—	2.74	6.87	—	—	—	—	**S10N04A83N**
3	0.15	—	—	3.98	10.0	—	—	2.12	5.31	1.87	4.69	**S10N06A83N**
3	0.25	8.71	21.9	—	—	4.56	11.5	—	—	—	—	**S10N04P26P**
3	0.25	—	—	6.63	16.7	—	—	3.52	8.85	3.11	7.81	**S10N06P26P**
3	0.50	17.4	43.7	—	—	9.31	22.9	—	—	—	—	**S10N04P51P**
3	0.50	—	—	13.3	33.3	—	—	7.05	17.7	6.22	15.6	**S10N06P51P**
3	0.75	26.1	65.6	—	—	13.7	34.4	—	—	—	—	**S10N04P76P**
3	0.75	—	—	19.9	50	—	—	10.6	26.6	9.33	23.4	**S10N06P76P**
3	1	34.8	87.5	—	—	18.3	45.8	—	—	—	—	**S10N04P01P**
3	1	—	—	26.5	66.7	—	—	14.1	35.4	12.5	31.2	**S10N06P01P**
3	1.5	52.3	131	—	—	27.4	68.7	—	—	—	—	**S10N04P16P**
3	1.5	—	—	39.8	100	—	—	21.2	53.1	18.7	46.9	**S10N06P16P**
3	2	69.7	175	—	—	36.6	91.6	—	—	—	—	**S10N04P02P**
3	2	—	—	53.1	133	—	—	28.2	70.8	24.9	62.5	**S10N06P02P**
3	3	104.4	262.5	—	—	54.9	137.4	—	—	—	—	**S10N04A03N**
3	3	—	—	79.5	200	—	—	42.3	106.2	37.5	93.6	**S10N06A03N**
3	5	174	437	—	—	91.3	229	—	—	—	—	**S10N04A05N**
3	5	—	—	133	333	—	—	70.5	177	62.2	156	**S10N06A05N**
3	7.5	261	656	—	—	137	344		—	—	—	**S10N04A07N**
3	7.5	—	—	199	500	—	—	106	266	93.3	234	**S10N06A07N**
Connection Diagram ②		Q		Q		R		R		S		

Notes

① Additional wiring trough may be required.

② Refer to **Page V2-T2-148** for buck-boost wiring diagrams.

Output voltage for lower input voltage can be found by: $\frac{\text{Rated Output Voltage}}{\text{Rated Input Voltage}}$ x Input Actual Voltage = Output New Voltage.

Output kVA available at reduced input voltage can be found by: $\frac{\text{Actual Input Voltage}}{\text{Rated Input Voltage}}$ x Output kVA = New kVA Rating.

Frame drawings/dimensions information begins on **Page V2-T2-204**.

WARNING! Three-phase autotransformers should never be used to obtain four-wire output with three-wire input. Four-wire output requires four-wire wye input.

On all wye connections, the source neutral must be present and connected to the transformer bank. If source neutral is not present, do not use a wye connection.

Three-Phase Wye Connection 240 Volt Output Required, 60 Hz

		Input Available Voltage										
		190		200		208		218		228		
Units Required ①	Unit kVA	Output kVA	Amps	Output kVA	Amps	Output kVA	Amps	Output kVA	Amps	Output kVA	Amps	Catalog Number
3	0.05	—	—	0.86	2.08	—	—	0.86	2.08	1.73	4.17	**S10N04A81N**
3	0.05	0.65	1.65	—	—	1.27	3.05	—	—	—	—	**S10N06A81N**
3	0.10	—	—	1.73	4.17	—	—	1.73	4.17	3.46	8.34	**S10N04A82N**
3	0.10	1.3	3.12	—	—	2.55	6.12	—	—	—	—	**S10N06A82N**
3	0.15	—	—	2.59	6.25	—	—	2.59	6.25	5.20	12.5	**S10N04A83N**
3	0.15	1.95	4.69	—	—	3.82	9.16	—	—	—	—	**S10N06A83N**
3	0.25	—	—	4.32	10.4	—	—	4.32	10.4	8.66	20.9	**S10N04P26P**
3	0.25	3.25	7.81	—	—	6.3	15.1	—	—	—	—	**S10N06P26P**
3	0.50	—	—	8.65	20.8	—	—	8.65	20.8	17.3	41.7	**S10N04P51P**
3	0.50	6.5	15.6	—	—	12.7	30.4	—	—	—	—	**S10N06P51P**
3	0.75	—	—	13	31.2	—	—	13	31.2	26	62.6	**S10N04P76P**
3	0.75	9.75	23.4	—	—	19.2	46	—	—	—	—	**S10N06P76P**
3	1	—	—	17.3	41.7	—	—	17.3	41.7	34.6	83.4	**S10N04P01P**
3	1	13	31.2	—	—	25.5	61.2	—	—	—	—	**S10N06P01P**
3	1.5	—	—	25.9	62.5	—	—	25.9	62.5	52	125	**S10N04P16P**
3	1.5	19.5	46.9	—	—	38.2	91.6	—	—	—	—	**S10N06P16P**
3	2	—	—	34.6	83.3	—	—	34.6	83.3	69.3	167	**S10N04P02P**
3	2	26	62.5	—	—	51	122.4	—	—	—	—	**S10N06P02P**
3	3	—	—	51.9	125.1	—	—	51.9	125.1	103.8	250.2	**S10N04A03N**
3	3	39	93.6	—	—	76.5	183.6	—	—	—	—	**S10N06A03N**
3	5	—	—	86.5	208	—	—	86.5	208	173	417	**S10N04A05N**
3	5	65	156	—	—	127.2	305.2	—	—	—	—	**S10N06A05N**
3	7.5	—	—	130	312	—	—	130	312	260	626	**S10N04A07N**
3	7.5	97.5	234	—	—	192	460	—	—	—	—	**S10N06A07N**
Connection Diagram ②		N		N		M		R		Q		

Notes

① Additional wiring trough may be required.

② Refer to **Page V2-T2-148** for buck-boost wiring diagrams.

Output voltage for lower input voltage can be found by: $\frac{\text{Rated Output Voltage}}{\text{Rated Input Voltage}}$ x Input Actual Voltage = Output New Voltage.

Output kVA available at reduced input voltage can be found by: $\frac{\text{Actual Input Voltage}}{\text{Rated Input Voltage}}$ x Output kVA = New kVA Rating.

Frame drawings/dimensions information begins on **Page V2-T2-204**.

WARNING! Three-phase autotransformers should never be used to obtain four-wire output with three-wire input. Four-wire output requires four-wire wye input.

On all wye connections, the source neutral must be present and connected to the transformer bank. If source neutral is not present, do not use a wye connection.

Three-Phase Wye Connection 240 Volt Output Required, 60 Hz

		Input Available Voltage										
		252		256		264		272		277		
Units Required ①	Unit kVA	Output kVA	Amps	Output kVA	Amps	Output kVA	Amps	Output kVA	Amps	Output kVA	Amps	Catalog Number
3	0.05	1.85	4.37	—	—	0.95	2.29	—	—	—	—	**S10N04A81N**
3	0.05	—	—	1.39	3.33	—	—	0.74	1.77	0.65	1.56	**S10N06A81N**
3	0.10	3.64	8.75	—	—	1.91	4.58	—	—	—	—	**S10N04A82N**
3	0.10	—	—	2.77	6.67	—	—	1.47	3.54	1.3	3.12	**S10N06A82N**
3	0.15	5.46	13.1	—	—	2.86	6.87	—	—	—	—	**S10N04A83N**
3	0.15	—	—	4.16	10.0	—	—	2.21	5.31	1.95	4.69	**S10N06A83N**
3	0.25	9.09	21.9	—	—	4.76	11.5	—	—	—	—	**S10N04P26P**
3	0.25	—	—	6.93	16.7	—	—	3.68	8.85	3.25	7.81	**S10N06P26P**
3	0.50	18.2	43.7	—	—	9.53	22.9	—	—	—	—	**S10N04P51P**
3	0.50	—	—	13.9	33.3	—	—	7.36	17.7	6.5	15.6	**S10N06P51P**
3	0.75	27.3	65.6	—	—	14.3	34.4	—	—	—	—	**S10N04P76P**
3	0.75	—	—	20.8	50	—	—	11	26.6	9.75	23.4	**S10N06P76P**
3	1	36.4	87.5	—	—	19.1	45.8	—	—	—	—	**S10N04P01P**
3	1	—	—	27.7	66.7	—	—	14.7	35.4	13	31.2	**S10N06P01P**
3	1.5	54.6	131	—	—	28.6	68.7	—	—	—	—	**S10N04P16P**
3	1.5	—	—	41.6	100	—	—	22.1	53.1	19.5	46.9	**S10N06P16P**
3	2	72.8	175	—	—	38.1	91.7	—	—	—	—	**S10N04P02P**
3	2	—	—	55.4	133	—	—	29.5	70.8	26	62.5	**S10N06P02P**
3	3	109.2	262.5	—	—	57.3	137.4	—	—	—	—	**S10N04A03N**
3	3	—	—	83.1	200	—	—	44.1	106.2	39	93.6	**S10N06A03N**
3	5	182	437	—	—	95.3	229	—	—	—	—	**S10N04A05N**
3	5	—	—	139	333	—	—	73.6	177	65	156	**S10N06A05N**
3	7.5	273	656	—	—	143	344	—	—	—	—	**S10N04A07N**
3	7.5	—	—	208	500	—	—	110	266	97.5	234	**S10N06A07N**
Connection Diagram ②		Q		Q		R		R		S		

Notes

① Additional wiring trough may be required.

② Refer to **Page V2-T2-148** for buck-boost wiring diagrams.

Output voltage for lower input voltage can be found by: $\frac{\text{Rated Output Voltage}}{\text{Rated Input Voltage}}$ x Input Actual Voltage = Output New Voltage.

Output kVA available at reduced input voltage can be found by: $\frac{\text{Actual Input Voltage}}{\text{Rated Input Voltage}}$ x Output kVA = New kVA Rating.

Frame drawings/dimensions information begins on **Page V2-T2-204**.

WARNING! Three-phase autotransformers should never be used to obtain four-wire output with three-wire input. Four-wire output requires four-wire wye input.

On all wye connections, the source neutral must be present and connected to the transformer bank. If source neutral is not present, do not use a wye connection.

Three-Phase Wye Connection 460 Volt Output Required, 60 Hz

		Input Available Voltage								
		406		418		432		438		
Units Required ①	Unit kVA	Output kVA	Amps	Output kVA	Amps	Output kVA	Amps	Output kVA	Amps	Catalog Number
3	0.05	—	—	1.66	2.08	—	—	3.22	4.04	**S10N04A81N**
3	0.05	1.25	1.57	—	—	2.49	3.12	—	—	**S10N06A81N**
3	0.10	—	—	3.31	4.15	—	—	6.62	8.31	**S10N04A82N**
3	0.10	2.49	3.12	—	—	4.97	6.24	—	—	**S10N06A82N**
3	0.15	—	—	4.97	6.24	—	—	9.94	12.48	**S10N04A83N**
3	0.15	3.73	4.68	—	—	7.46	9.36	—	—	**S10N06A83N**
3	0.25	—	—	8.28	10.39	—	—	16.6	20.84	**S10N04P26P**
3	0.25	6.22	7.81	—	—	12.4	15.56	—	—	**S10N06P26P**
3	0.50	—	—	16.6	20.84	—	—	33.2	41.67	**S10N04P51P**
3	0.50	12.5	15.69	—	—	24.69	31.25	—	—	**S10N06P51P**
3	0.75	—	—	24.8	31.12	—	—	49.6	62.25	**S10N04P76P**
3	0.75	18.7	23.47	—	—	37.3	46.82	—	—	**S10N06P76P**
3	1	—	—	33.1	41.54	—	—	66.2	83.09	**S10N04P01P**
3	1	24.9	31.25	—	—	49.7	62.38	—	—	**S10N06P01P**
3	1.5	—	—	49.7	62.38	—	—	99.4	124.75	**S10N04P16P**
3	1.5	37.3	46.94	—	—	74.6	93.63	—	—	**S10N06P16P**
3	2	—	—	66.3	83.22	—	—	133	166.93	**S10N04P02P**
3	2	49.7	62.38	—	—	99.5	124.88	—	—	**S10N06P02P**
3	3	—	—	99.3	124.64	—	—	198.6	249.27	**S10N04A03N**
3	3	74.6	93.63	—	—	149	187.01	—	—	**S10N06A03N**
3	5	—	—	166	208.35	—	—	322	404.16	**S10N04A05N**
3	5	125	156.89	—	—	249	312.53	—	—	**S10N06A05N**
3	7.5	—	—	248	311	—	—	496	622	**S10N04A07N**
3	7.5	187	235	—	—	373	468	—	—	**S10N06A07N**
Connection Diagram ②		R		R		Q		Q		

Notes

① Additional wiring trough may be required.

② Refer to **Page V2-T2-148** for buck-boost wiring diagrams.

Output voltage for lower input voltage can be found by: $\frac{\text{Rated Output Voltage}}{\text{Rated Input Voltage}}$ x Input Actual Voltage = Output New Voltage.

Output kVA available at reduced input voltage can be found by: $\frac{\text{Actual Input Voltage}}{\text{Rated Input Voltage}}$ x Output kVA = New kVA Rating.

Frame drawings/dimensions information begins on **Page V2-T2-204**.

WARNING! Three-phase autotransformers should never be used to obtain four-wire output with three-wire input. Four-wire output requires four-wire wye input.

On all wye connections, the source neutral must be present and connected to the transformer bank. If source neutral is not present, do not use a wye connection.

Three-Phase Wye Connection 460 Volt Output Required, 60 Hz

		Input Available Voltage						
		424		436		450		
Units Required ①	Unit kVA	Output kVA	Amps	Output kVA	Amps	Output kVA	Amps	Catalog Number
3	0.05	—	1.7	2.1	—	—	—	**S10N04A81N**
3	0.05	1.3	1.56	—	—	2.6	3.13	**S10N06A81N**
3	0.10	—	—	3.5	4.2	—	—	**S10N04A82N**
3	0.10	2.6	3.12	—	—	5.2	6.25	**S10N06A82N**
3	0.15		—	5.2	6.25	—	—	**S10N04A83N**
3	0.15	3.9	4.68	—	—	7.8	9.38	**S10N06A83N**
3	0.25	—	—	8.7	10.4	—	—	**S10N04P26P**
3	0.25	6.5	7.82	—	—	13	15.6	**S10N06P26P**
3	0.50	—	—	17.4	20.9	—	—	**S10N04P51P**
3	0.50	13	15.6	—	—	26	31.2	**S10N06P51P**
3	0.75	—	—	26	31.2	—	—	**S10N04P76P**
3	0.75	19.5	23.4	—	—	39	46.9	**S10N06P76P**
3	1	—	—	35	42	—	—	**S10N04P01P**
3	1	26	31.2	—	—	52	62.5	**S10N06P01P**
3	1.5	—	—	52	62.5	—	—	**S10N04P16P**
3	1.5	39	46.8	—	—	78	93.8	**S10N06P16P**
3	2	—	—	69	82.9	—	—	**S10N04P02P**
3	2	52	62.5	—	—	104	125	**S10N06P02P**
3	3	—	—	104	125	—	—	**S10N04A03N**
3	3	78	93.8	—	—	156	187.6	**S10N06A03N**
3	5	—	—	174	209.2	—	—	**S10N04A05N**
3	5	130	156.3	—	—	260	312.7	**S10N06A05N**
3	7.5	—	—	260	312	—	—	**S10N04A07N**
3	7.5	195	234	—	—	390	469	**S10N06A07N**
Connection Diagram ②		R		R		Q		

Notes

① Additional wiring trough may be required.

② Refer to **Page V2-T2-148** for buck-boost wiring diagrams.

Output voltage for lower input voltage can be found by: $\frac{\text{Rated Output Voltage}}{\text{Rated Input Voltage}}$ x Input Actual Voltage = Output New Voltage.

Output kVA available at reduced input voltage can be found by: $\frac{\text{Actual Input Voltage}}{\text{Rated Input Voltage}}$ x Output kVA = New kVA Rating.

Frame drawings/dimensions information begins on **Page V2-T2-204**.

Single-Phase Required, 60 Hz

		Input Available Voltage/Output Voltage								
		200/240		230/277		346/380		362/380		
Units Required ①	Unit kVA	Output kVA	Amps	Output kVA	Amps	Output kVA	Amps	Output kVA	Amps	Catalog Number
1	0.25	1.25	5.2	1.44	5.2	1.98	5.2	3.95	10.4	**S20N08P26P**
1	0.50	2.50	10.4	2.88	10.4	3.95	10.4	7.90	20.8	**S20N08P51P**
1	0.75	3.75	15.6	4.32	15.6	5.93	15.6	11.9	31.2	**S20N08P76P**
1	1	5.00	20.8	5.76	20.8	7.90	20.8	15.8	41.6	**S20N08P01P**
1	1.5	7.50	31.2	8.64	31.2	11.9	31.2	23.8	62.5	**S20N08P16P**
1	2	10.0	41.6	11.5	41.6	15.8	41.6	31.6	83.3	**S20N08P02P**
1	3	15.0	62.5	17.3	62.5	23.8	62.5	47.5	125.0	**S20N08A03N**
1	5	25.0	104.0	28.8	104.0	39.5	104.0	79.0	208.0	**S20N08A05N**
1	7.5	37.5	156.0	43.2	156.0	59.3	156.0	118.6	312.0	**S20N08A07N**
Connection Diagram ②		B		B		F		E		

Single-Phase Required, 60 Hz

		Input Available Voltage/Output Voltage								
		378/416		416/457		436/480		458/480		
Units Required ①	Unit kVA	Output kVA	Amps	Output kVA	Amps	Output kVA	Amps	Output kVA	Amps	Catalog Number
1	0.25	2.16	5.2	2.38	5.2	2.50	5.2	4.99	10.4	**S20N08P26P**
1	0.50	4.33	10.4	4.76	10.4	4.99	10.4	9.98	20.8	**S20N08P51P**
1	0.75	6.49	15.6	7.14	15.6	7.49	15.6	15.0	31.2	**S20N08P76P**
1	1	8.65	20.8	9.52	20.8	9.98	20.8	20.0	41.6	**S20N08P01P**
1	1.5	13.0	31.2	14.3	31.2	15.0	31.2	30.0	62.5	**S20N08P16P**
1	2	17.3	41.6	19.0	41.6	20.0	41.6	40.0	83.3	**S20N08P02P**
1	3	26.0	62.5	28.6	62.5	30.0	62.5	60.0	125.0	**S20N08A03N**
1	5	43.3	104.0	47.6	104.0	49.9	104.0	99.8	208.0	**S20N08A05N**
1	7.5	64.9	156.0	71.4	156.0	74.9	156.0	149.8	312.0	**S20N08A07N**
Connection Diagram ②		F		F		F		E		

Notes

① Additional wiring trough may be required.

② Refer to **Page V2-T2-148** for buck-boost wiring diagrams.

Output voltage for lower input voltage can be found by: $\frac{\text{Rated Output Voltage}}{\text{Rated Input Voltage}}$ x Input Actual Voltage = Output New Voltage.

Output kVA available at reduced input voltage can be found by: $\frac{\text{Actual Input Voltage}}{\text{Rated Input Voltage}}$ x Output kVA = New kVA Rating.

Frame drawings/dimensions information begins on **Page V2-T2-204**.

Single-Phase Required, 60 Hz

		Input Available Voltage/Output Voltage								
		277/230		480/456		504/480		528/480		
Units Required ①	Unit kVA	Output kVA	Amps	Output kVA	Amps	Output kVA	Amps	Output kVA	Amps	Catalog Number
1	0.25	1.44	6.26	5.23	11.4	5.47	11.4	2.75	5.72	**S20N08P26P**
1	0.50	2.88	12.5	10.4	22.8	10.9	22.8	5.49	11.4	**S20N08P51P**
1	0.75	4.33	18.8	15.7	34.2	16.4	34.2	8.24	17.2	**S20N08P76P**
1	1	5.76	25.0	20.9	45.6	21.8	45.6	11.0	22.9	**S20N08P01P**
1	1.5	8.64	37.6	31.3	68.4	32.8	68.4	16.5	34.3	**S20N08P16P**
1	2	11.5	50.1	41.8	91.2	43.7	91.2	22.0	45.8	**S20N08P02P**
1	3	17.3	75.3	62.7	136.0	65.2	136.0	33.0	68.8	**S20N08A03N**
1	5	28.8	125.3	104.5	227.0	108.0	227.0	54.9	114.4	**S20N08A05N**
1	7.5	43.2	187.9	156.8	341.0	163.0	341.0	82.4	171.6	**S20N08A07N**
Connection Diagram ②		B		E		E		F		

Notes

① Additional wiring trough may be required.

② Refer to **Page V2-T2-148** for buck-boost wiring diagrams.

Output voltage for lower input voltage can be found by: $\frac{\text{Rated Output Voltage}}{\text{Rated Input Voltage}}$ x Input Actual Voltage = Output New Voltage.

Output kVA available at reduced input voltage can be found by: $\frac{\text{Actual Input Voltage}}{\text{Rated Input Voltage}}$ x Output kVA = New kVA Rating.

Frame drawings/dimensions information begins on **Page V2-T2-204**.

Three-Phase Required, 60 Hz

Unit kVA	Input Available Voltage/Output Voltage 362/380 Output kVA	Amps	346/416 Output kVA	Amps	430/473 Output kVA	Amps	400/480 Output kVA	Amps	436/480 Output kVA	Amps	Catalog Number
0.25	6.52	10.4	3.75	5.2	4.26	5.2	4.33	5.2	4.33	5.2	**S20N08P26P**
0.50	13.0	20.8	7.50	10.4	8.52	10.4	8.65	10.4	8.65	10.4	**S20N08P51P**
0.75	19.6	31.2	11.2	15.6	12.8	15.6	13.0	15.6	13.0	15.6	**S20N08P76P**
1	26.1	41.6	15.0	20.8	17.0	20.8	17.3	20.8	17.3	20.8	**S20N08P01P**
1.5	39.1	62.4	22.5	31.2	25.5	31.2	26.0	31.2	26.0	31.2	**S20N08P16P**
2	52.2	83.2	30.0	41.6	34.1	41.6	34.6	41.6	34.6	41.6	**S20N08P02P**
3	78.4	125.0	45.0	62.5	51.2	62.5	52.0	62.5	52.0	62.5	**S20N08A03N**
5	130.4	208.0	75.1	104.0	85.2	104.0	86.6	104.0	86.6	104.0	**S20N08A05N**
7.5	195.6	312.0	112.6	156.0	127.8	156.0	129.9	156.0	129.9	156.0	**S20N08A07N**
Connection Diagram ①	I		N		K		N		K		
Units Required ②	2		3		2		3		2		

Three-Phase Required, 60 Hz

Unit kVA	Input Available Voltage/Output Voltage 460/483 Output kVA	Amps	457/380 Output kVA	Amps	504/480 Output kVA	Amps	528/480 Output kVA	Amps	Catalog Number
0.25	8.7	10.4	4.12	6.25	9.08	10.9	4.76	5.72	**S20N08P26P**
0.50	17.4	20.8	8.23	12.5	18.2	21.8	9.51	11.4	**S20N08P51P**
0.75	26.1	31.2	12.3	18.8	27.2	32.8	14.3	17.2	**S20N08P76P**
1	34.8	41.6	16.5	25.0	36.3	43.7	19.0	22.9	**S20N08P01P**
1.5	52.2	62.4	24.7	37.5	54.5	65.5	28.5	34.3	**S20N08P16P**
2	69.6	83.2	32.9	50.0	72.6	87.4	38.0	45.8	**S20N08P02P**
3	104.6	125.0	49.5	75.2	109.7	131.3	57.2	68.8	**S20N08A03N**
5	174.0	208.0	82.3	125.1	181.6	218.4	95.1	114.4	**S20N08A05N**
7.5	261.0	312.0	123.5	187.6	272.4	327.6	142.7	171.6	**S20N08A07N**
Connection Diagram ①	I		N		I		K		
Units Required ②	2		3		2		2		

Notes

① Refer to **Page V2-T2-148** for buck-boost wiring diagrams.

② Additional wiring trough may be required.

Output voltage for lower input voltage can be found by: $\frac{\text{Rated Output Voltage}}{\text{Rated Input Voltage}}$ x Input Actual Voltage = Output New Voltage.

Output kVA available at reduced input voltage can be found by: $\frac{\text{Actual Input Voltage}}{\text{Rated Input Voltage}}$ x Output kVA = New kVA Rating.

Frame drawings/dimensions information begins on **Page V2-T2-204**.

Three-Phase Open Delta Connection 480 Volt Output Required, 60 Hz

	Input Available Voltage						
	600		575		575		
	Output		Output		Output		
Units Required ①	kVA	Amps	kVA	Amps	kVA	Amps	Catalog Number ②
2	4.3	5.1	—	—	—	—	**S20N11P51P**
2	—	—	—	—	4.1	4.9	**S60G11P51P**
2	6.5	7.8	—	—	—	—	**S20N11P76P**
2	—	—	—	—	6.2	7.4	**S60G11P76P**
2	8.6	10.3	—	—	—	—	**S20N11P01P**
2	—	—	—	—	8.3	9.9	**S60G11P01P**
2	13.0	15.6	—	—	—	—	**S20N11P16P**
2	—	—	—	—	12.4	14.9	**S60G11P16P**
2	17.2	20.6	—	—	—	—	**S20N11P02P**
2	—	—	—	—	16.5	19.8	**S60G11P02P**
2	25.8	31	—	—	—	—	**S20N11S03N**
2	—	—	—	—	24.8	29.8	**S60G11P03P**
2	43.2	51.9	—	—	—	—	**S20N11S05N**
2	—	—	—	—	41	49.3	**S60G11S05N**
2	65	78.1	—	—	—	—	**S20N11S07N**
2	—	—	—	—	62	74.5	**S60G11S07N**
2	86	103.4	—	—	—	—	**S20N11S10N**
2	—	—	83	99.8	—	—	**S60G11S10N**
2	130	156.3	—	—	—	—	**S20N11S15N**
2	—	—	124	149.1	—	—	**S60N11S15N**
2	216	259.8	—	—	—	—	**T20P11S2516**
2	—	—	207	248.9	—	—	**S60J11S25N**
2	324	389.7	—	—	—	—	**T20P11S3716**
2	432	519.6	—	—	—	—	**T20P11S5016**
Connection Diagram ③	I		J		T		

Notes

① Additional wiring trough may be required.

② On transformers supplied with standard taps, taps must be placed at nominal settings.

③ Refer to **Page V2-T2-148** for buck-boost wiring diagrams.

Autotransformers can be used only where local electric codes permit and isolation of the two circuits is not required.

Output voltage for lower input voltage can be found by: $\frac{\text{Rated Output Voltage}}{\text{Rated Input Voltage}}$ x Input Actual Voltage = Output New Voltage.

Output kVA available at reduced input voltage can be found by: $\frac{\text{Actual Input Voltage}}{\text{Rated Input Voltage}}$ x Output kVA = New kVA Rating.

Frame drawings/dimensions information begins on **Page V2-T2-204**.

Single-Phase 480 Volt Output Required, 60 Hz

	Input Available Voltage						
	600 Output		575 Output		575 Output		
Units Required ①	kVA	Amps	kVA	Amps	kVA	Amps	Catalog Number ②
1	2.5	5.2	—	—	—	—	**S20N11P51P**
1	—	—	—	—	2.4	5	**S60G11P51P**
1	3.7	7.7	—	—	—	—	**S20N11P76P**
1	—	—	—	—	3.6	7.5	**S60G11P76P**
1	5.0	10.4	—	—	—	—	**S20N11P01P**
1	—	—	—	—	4.8	10	**S60G11P01P**
1	7.5	15.6	—	—	—	—	**S20N11P16P**
1	—	—	—	—	7.2	15	**S60G11P16P**
1	10	20.8	—	—	—	—	**S20N11P02P**
1	—	—	—	—	9.6	20	**S60G11P02P**
1	15	31.2	—	—	—	—	**S20N11S03N**
1	—	—	—	—	14.3	29.7	**S60G11P03P**
1	25	52	—	—	—	—	**S20N11S05N**
1	—	—	—	—	24	50	**S60G11S05N**
1	37.5	78.1	—	—	—	—	**S20N11S07N**
1	—	—	—	—	36	75	**S60G11S07N**
1	50	104.1	—	—	—	—	**S20N11S10N**
1	—	—	43	100	—	—	**S60G11S10N**
1	75	156.2	—	—	—	—	**S20N11S15N**
1	—	—	72	150	—	—	**S60N11S15N**
1	125	260.4	—	—	—	—	**T20P11S2516**
1	—	—	120	250	—	—	**S60J11S25N**
1	187	389.6	—	—	—	—	**T20P11S3716**
1	250	520.8	—	—	—	—	**T20P11S5016**
Connection Diagram ③	E		H		U		

Notes

① Additional wiring trough may be required.

② On transformers supplied with standard taps, taps must be placed at nominal settings.

③ Refer to **Page V2-T2-148** for buck-boost wiring diagrams.

Autotransformers can be used only where local electric codes permit and isolation of the two circuits is not required.

Output voltage for lower input voltage can be found by: $\frac{\text{Rated Output Voltage}}{\text{Rated Input Voltage}}$ x Input Actual Voltage = Output New Voltage.

Output kVA available at reduced input voltage can be found by: $\frac{\text{Actual Input Voltage}}{\text{Rated Input Voltage}}$ x Output kVA = New kVA Rating.

Frame drawings/dimensions information begins on **Page V2-T2-204**.

Buck-Boost and Low-Voltage Lighting Transformers

Accessories

Please refer to Section 2.7 **Page V2-T2-167**.

Technical Data and Specifications

Frequency

Eaton buck-boost transformers are designed for 60 Hz operation.

Overload Capability

Short-term overload is designed into transformers as required by ANSI. Dry-type distribution transformers will deliver 200% nameplate load for one-half hour, 150% load for one hour, and 125% load for four hours without being damaged, provided that a constant 50% load precedes and follows the overload. See ANSI C57.96-01.250 for additional limitations.

Continuous overload capacity is not deliberately designed into a transformer because the design objective is to be within the allowed winding temperature rise with nameplate loading.

Insulation System and Temperature Rise

Industry standards classify insulation systems and rise as shown below:

Insulation System Classification

Ambient	+ Winding Rise	+ Hot Spot	= Temp. Class
40°C	55°C	10°C	105°C
40°C	80°C	30°C	150°C
25°C	135°C	20°C	180°C
40°C	115°C	30°C	185°C
40°C	150°C	30°C	220°C

The design life of transformers having different insulation systems is the same—the lower-temperature systems are designed for the same life as the higher-temperature systems.

Enclosures

Eaton encapsulated buck-boost transformers use a NEMA 3R rated enclosure.

Winding Terminations

Primary and secondary windings are terminated in the wiring compartment. Encapsulated units have copper leads or stabs brought out for connections. **Lugs are not supplied with these transformers.** Eaton recommends that external cables be rated 90°C (sized at 75°C ampacity) for encapsulated designs.

Series-Multiple Windings

Series-multiple windings consist of two similar coils in each winding that can be connected in series or parallel (multiple). Transformers with series-multiple windings are designated with an "x" or "/" between the voltage ratings, such as voltages of "120/240" or "240 x 480." If the series-multiple winding is designated by an "x," the winding can be connected only for a series or parallel. With the "/" designation, a mid-point also becomes available in addition to the series or parallel connection. As an example, a 120 x 240 winding can be connected for either 120 (parallel) or 240 (series), but a 120/240 winding can be connected for 120 (parallel), 240 (series) or 240 with a 120 mid-point.

Sound Levels

All Eaton 600 volt class general-purpose dry-type distribution transformers are designed to meet NEMA ST-20 sound levels listed here. These are the sound levels measured in a soundproof environment. Actual sound levels measured at an installation will likely be higher due to electrical connections and environmental conditions. Lower sound levels are available and should be specified when the transformer is going to be installed in an area where sound may be a concern.

For additional information, please refer to Section 2.7 **Page V2-T2-171**.

Note: When installation is to be made on a grounded system, consideration must be given to the resulting voltage. Thus, on a 208 grounded wye/120 system, the voltage can be boosted to 240 volts but the voltage to ground will be 139 volts. If 240/120 volts with a mid-point ground is needed, a standard two-winding transformer must be used.

The following formulas can be used to calculate specific requirements.

For single-phase:

$$\text{LOAD kVA} = \frac{\text{Load Voltage} \times \text{Full Line Amperes}}{1000}$$

For three-phase:

$$\text{LOAD kVA} = \frac{\text{Line Load Voltage} \times 1.73 \times \text{Full Load Amperes}}{1000}$$

Average Sound Levels

NEMA ST-20 Average Sound Level, dB

Equivalent Winding kVA Range	Self-Cooled Ventilated (up to 1.2 kV) K-Factor 1, 4, 9	Self-Cooled Ventilated (up to 1.2 kV) K-Factor 13, 20	Encapsulated (up to 1.2 kV)
3.00 and below	40	40	45
3.01 to 9.00	40	40	45
9.01 to 15.00	45	45	50
15.01 to 30.00	45	45	50
30.01 to 50.00	45	48	50
50.01 to 75.00	50	53	55
75.01 to 112.50	50	53	55
112.51 to 150.00	50	53	55
150.01 to 225.00	55	58	57
225.01 to 300.00	55	58	57
300.01 to 500.00	60	63	59
500.01 to 700.00	62	65	61
700.01 to 1000.00	64	67	63
Greater than 1000	Consult factory	Consult factory	Consult factory

Wiring Diagrams

Buck-Boost Transformers Wiring Diagrams

Diagram A

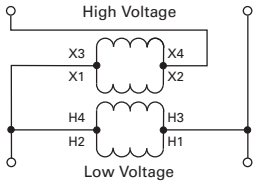

Diagram B

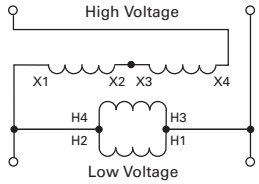

Diagram C

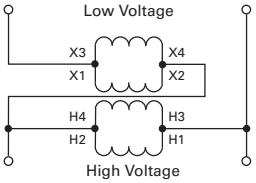

Diagram D

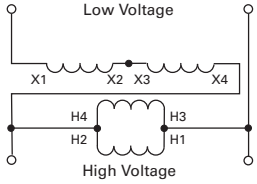

Diagram E

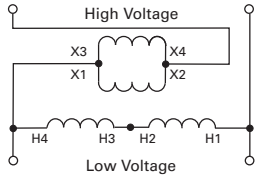

Diagram F

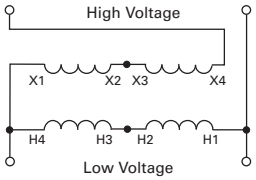

Diagram G

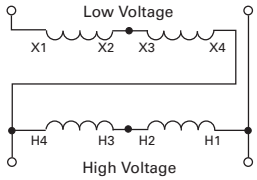

Diagram H

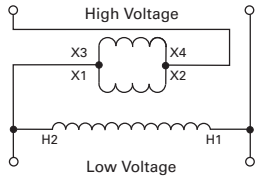

Diagram I

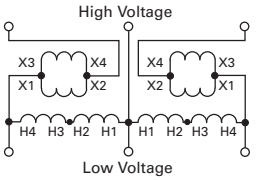

Diagram J

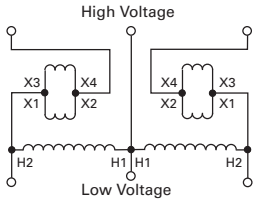

Diagram K

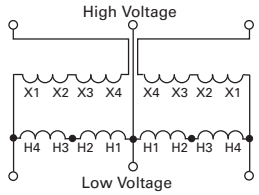

Diagram L

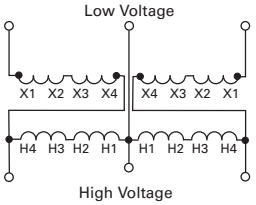

Diagram M ①

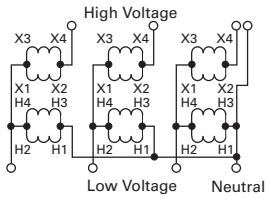

Diagram N ①

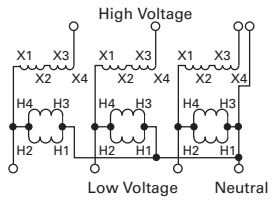

Diagram O ①

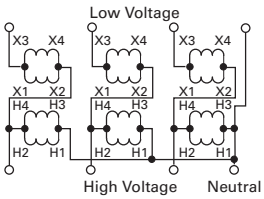

Diagram P ①

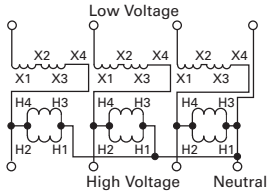

Diagram Q ①

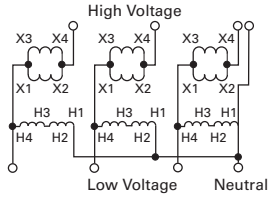

Diagram R ①

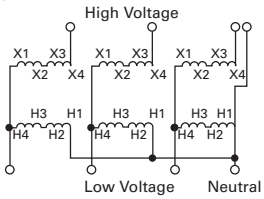

Diagram S ①

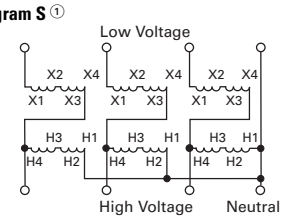

Diagram T

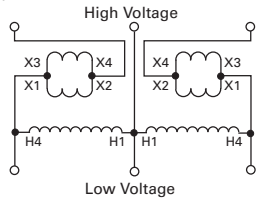

Diagram U

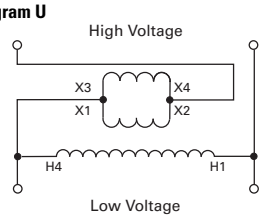

Note

① **WARNING!** If input is three-wire, "neutral" connection must be isolated and insulated! When used to supply a three-phase, four-wire load, the source must be three-phase, four-wire wye.

Contents

Description	*Page*
Motor Drive Isolation Transformers	**V2-T2-97**
Mini–Power Centers	**V2-T2-105**
Totally Enclosed Non-Ventilated Transformers	**V2-T2-109**
Class I, Division 2, Hazardous Location Transformers	**V2-T2-112**
Marine Duty Transformers	**V2-T2-115**
Buck-Boost and Low-Voltage Lighting Transformers	**V2-T2-120**
Medium-Voltage Dry-Type Distribution Transformers	
Features, Benefits and Functions	**V2-T2-149**
Standards and Certifications	**V2-T2-149**
Product Selection	**V2-T2-150**

Medium-Voltage Dry-Type Distribution Transformers

Product Description

Note: The following pages provide listings for most standard transformer ratings and catalog numbers. For other ratings or catalog numbers not shown, or for special enclosure types (including stainless steel), refer to Eaton.

Single- and Three-Phase

- Ventilated, NEMA 3R enclosure standard
- Suitable for indoor or outdoor applications
- Upright mounting only
- 220°C insulation system
- 150°C rise standard; 115°C or 80°C rise optional
- Available in single-phase ratings 15–333 kVA
- Available in three-phase ratings 15–1500 kVA

Application Description

DOE 2016 compliant energy-efficient transformers are specifically designed to meet the energy efficiency standards set forth in CFR Title 10 Chapter II Part 431, Appendix A of Subpart K 2016. Compliant transformers are optimized to offer maximum efficiency at 50% of nameplate rating.

Transformers that are currently specifically excluded from the scope of DOE 10 CFR Part 431 include:

- Liquid-filled transformers below 10 kVA
- Dry-type transformers below 15 kVA
- AC and DC drives transformers
- Rectifier transformers designed for high harmonics
- Autotransformers
- Non-distribution transformers, such as UPS transformers
- Special impedance or regulation transformers
- Regulating transformers
- Sealed and non-ventilated transformers
- Machine tool transformers
- Welding transformers
- Transformers with tap ranges greater than 15%
- Transformers with a frequency other than 60 Hz
- Grounding transformers
- Testing transformers

DOE 2016 Efficiency Levels

Tables of Energy Efficiency Medium-Voltage Dry-Type Distribution Transformers—20–45 kV BIL

Single-Phase		Three-Phase	
kVA	**Efficiency**	**kVA**	**Efficiency**
15	98.10	15	97.50
25	98.33	30	97.90
37.5	98.49	45	98.10
50	98.60	75	98.33
75	98.73	112.5	98.52
100	98.82	150	98.65
167	98.96	225	98.82
250	99.07	300	98.93
333	99.14	500	99.09
—	—	750	99.21
—	—	1000	99.28
—	—	1500	99.37

Features, Benefits and Functions

- 60 Hz operation (except as noted)
- Short-term overload capability as required by ANSI
- Meet NEMA ST-20 sound levels
- Meet CFR Title 10 Chapter II Part 431, Appendix A of Subpart K 2016 energy efficiency requirements for dry-type transformers effective as of January 1, 2016

Standards and Certifications

- UL listed

Listed

Industry Standards

All Eaton dry-type distribution and control transformers are built and tested in accordance with applicable NEMA, ANSI and IEEE Standards.

Seismically Qualified

Eaton manufactured dry-type distribution transformers are seismically qualified and exceed requirements of the International Building Code (IBC) and California Code Title 24.

Product Selection

Single-Phase—Medium-Voltage Distribution Transformers 60 Hz DOE 2016 Energy-Efficient— Aluminum Windings

2400 Volts to 120/240 Volts

kVA	Temperature Rise °C	Frame	Wiring Diagram	Weight Lb (kg)	Type 3R WS Kit	Wallmount Bracket	Catalog Number
25	150	Contact local Eaton representative					**T42D11S2516**
37.5							**T42D11S3716**
50							**T42D11S5016**
75							**T42D11S7516**
100							**T42D11S9916**
167							**T42D11S6716**
25	115	Contact local Eaton representative					**T42D11F2516**
37.5							**T42D11F3716**
50							**T42D11F5016**
75							**T42D11F7516**
100							**T42D11F9916**
167							**T42D11F6716**
25	80	Contact local Eaton representative					**T42D11B2516**
37.5							**T42D11B3716**
50							**T42D11B5016**
75							**T42D11B7516**
100							**T42D11B9916**
167							**T42D11B6716**

4160 Volts to 120/240 Volts

kVA	Temperature Rise °C	Frame	Wiring Diagram	Weight Lb (kg)	Type 3R WS Kit	Wallmount Bracket	Catalog Number
25	150	Contact local Eaton representative					**T46D11S2516**
37.5							**T46D11S3716**
50							**T46D11S5016**
75							**T46D11S7516**
100							**T46D11S9916**
167							**T46D11S6716**
25	115	Contact local Eaton representative					**T46D11F2516**
37.5							**T46D11F3716**
50							**T46D11F5016**
75							**T46D11F7516**
100							**T46D11F9916**
167							**T46D11F6716**
25	80	Contact local Eaton representative					**T46D11B2516**
37.5							**T46D11B3716**
50							**T46D11B5016**
75							**T46D11B7516**
100							**T46D11B9916**
167							**T46D11B6716**

Note

Contact your local Eaton sales office for CE Mark transformer requirements. For other ratings or catalog numbers not shown, or for special enclosure types (including stainless steel), refer to Eaton.

Single-Phase—Medium-Voltage Distribution Transformers 60 Hz DOE 2016 Energy-Efficient— Copper Windings

2400 Volts to 120/240 Volts

kVA	Temperature Rise °C	Frame	Wiring Diagram	Weight Lb (kg)	Type 3R WS Kit	Wallmount Bracket	Catalog Number
25	150	Contact local Eaton representative					**T42D11S2516CU**
37.5							**T42D11S3716CU**
50							**T42D11S5016CU**
75							**T42D11S7516CU**
100							**T42D11S9916CU**
167							**T42D11S6716CU**
25	115	Contact local Eaton representative					**T42D11F2516CU**
37.5							**T42D11F3716CU**
50							**T42D11F5016CU**
75							**T42D11F7516CU**
100							**T42D11F9916CU**
167							**T42D11F6716CU**
25	80	Contact local Eaton representative					**T42D11B2516CU**
37.5							**T42D11B3716CU**
50							**T42D11B5016CU**
75							**T42D11B7516CU**
100							**T42D11B9916CU**
167							**T42D11B6716CU**

4160 Volts to 120/240 Volts

kVA	Temperature Rise °C	Frame	Wiring Diagram	Weight Lb (kg)	Type 3R WS Kit	Wallmount Bracket	Catalog Number
25	150	Contact local Eaton representative					**T46D11S2516CU**
37.5							**T46D11S3716CU**
50							**T46D11S5016CU**
75							**T46D11S7516CU**
100							**T46D11S9916CU**
167							**T46D11S6716CU**
25	115	Contact local Eaton representative					**T46D11F2516CU**
37.5							**T46D11F3716CU**
50							**T46D11F5016CU**
75							**T46D11F7516CU**
100							**T46D11F9916CU**
167							**T46D11F6716CU**
25	80	Contact local Eaton representative					**T46D11B2516CU**
37.5							**T46D11B3716CU**
50							**T46D11B5016CU**
75							**T46D11B7516CU**
100							**T46D11B9916CU**
167							**T46D11B6716CU**

Note

Contact your local Eaton sales office for CE Mark transformer requirements. For other ratings or catalog numbers not shown, or for special enclosure types (including stainless steel), refer to Eaton.

Three-Phase—Medium-Voltage Distribution Transformers 60 Hz DOE 2016 Energy-Efficient— Aluminum Windings

2400 Delta Volts to 480Y/277 Volts

kVA	Temperature Rise °C	Frame	Wiring Diagram	Weight Lb (kg)	Type 3R WS Kit	Wallmount Bracket	Catalog Number
45	150	Contact local Eaton representative					**V42D47T4516**
75							**V42D47T7516**
112.5							**V42D47T1216**
150							**V42D47T4916**
225							**V42D47T2216**
300							**V42D47T3316**
500							**V42D47T5516**
750							**V42D47T7716**
45	115	Contact local Eaton representative					**V42D47F4516**
75							**V42D47F7516**
112.5							**V42D47F1216**
150							**V42D47F4916**
225							**V42D47F2216**
300							**V42D47F3316**
500							**V42D47F5516**
750							**V42D47F7716**
45	80	Contact local Eaton representative					**V42D47B4516**
75							**V42D47B7516**
112.5							**V42D47B1216**
150							**V42D47B4916**
225							**V42D47B2216**
300							**V42D47B3316**
500							**V42D47B5516**
750							**V42D47B7716**

Note

Contact your local Eaton sales office for CE Mark transformer requirements. For other ratings or catalog numbers not shown, or for special enclosure types (including stainless steel), refer to Eaton.

Three-Phase—Medium-Voltage Distribution Transformers 60 Hz DOE 2016 Energy-Efficient— Aluminum Windings

4160 Delta Volts to 480Y/277 Volts

kVA	Temperature Rise °C	Frame	Wiring Diagram	Weight Lb (kg)	Type 3R WS Kit	Wallmount Bracket	Catalog Number
45	150	Contact local Eaton representative					**V46D47T4516**
75							**V46D47T7516**
112.5							**V46D47T1216**
150							**V46D47T4916**
225							**V46D47T2216**
300							**V46D47T3316**
500							**V46D47T5516**
750							**V46D47T7716**
45	115	Contact local Eaton representative					**V46D47F4516**
75							**V46D47F7516**
112.5							**V46D47F1216**
150							**V46D47F4916**
225							**V46D47F2216**
300							**V46D47F3316**
500							**V46D47F5516**
750							**V46D47F7716**
45	80	Contact local Eaton representative					**V46D47B4516**
75							**V46D47B7516**
112.5							**V46D47B1216**
150							**V46D47B4916**
225							**V46D47B2216**
300							**V46D47B3316**
500							**V46D47B5516**
750							**V46D47B7716**

Note

Contact your local Eaton sales office for CE Mark transformer requirements. For other ratings or catalog numbers not shown, or for special enclosure types (including stainless steel), refer to Eaton.

Three-Phase—Medium-Voltage Distribution Transformers 60 Hz DOE 2016 Energy-Efficient— Aluminum Windings

2400 Delta Volts to 208Y/120 Volts

kVA	Temperature Rise °C	Frame	Wiring Diagram	Weight Lb (kg)	Type 3R WS Kit	Wallmount Bracket	Catalog Number
45	150	Contact local Eaton representative					**V42D28T4516**
75							**V42D28T7516**
112.5							**V42D28T1216**
150							**V42D28T4916**
225							**V42D28T2216**
300							**V42D28T3316**
500							**V42D28T5516**
750							**V42D28T7716**
45	115	Contact local Eaton representative					**V42D28F4516**
75							**V42D28F7516**
112.5							**V42D28F1216**
150							**V42D28F4916**
225							**V42D28F2216**
300							**V42D28F3316**
500							**V42D28F5516**
750							**V42D28F7716**
45	80	Contact local Eaton representative					**V42D28B4516**
75							**V42D28B7516**
112.5							**V42D28B1216**
150							**V42D28B4916**
225							**V42D28B2216**
300							**V42D28B3316**
500							**V42D28B5516**
750							**V42D28B7716**

Note

Contact your local Eaton sales office for CE Mark transformer requirements. For other ratings or catalog numbers not shown, or for special enclosure types (including stainless steel), refer to Eaton.

Three-Phase—Medium-Voltage Distribution Transformers 60 Hz DOE 2016 Energy-Efficient— Aluminum Windings

4160 Delta Volts to 208Y/120 Volts

kVA	Temperature Rise °C	Frame	Wiring Diagram	Weight Lb (kg)	Type 3R WS Kit	Wallmount Bracket	Catalog Number
45	150	Contact local Eaton representative					**V46D28T4516**
75							**V46D28T7516**
112.5							**V46D28T1216**
150							**V46D28T4916**
225							**V46D28T2216**
300							**V46D28T3316**
500							**V46D28T5516**
750							**V46D28T7716**
45	115	Contact local Eaton representative					**V46D28F4516**
75							**V46D28F7516**
112.5							**V46D28F1216**
150							**V46D28F4916**
225							**V46D28F2216**
300							**V46D28F3316**
500							**V46D28F5516**
750							**V46D28F7716**
45	80	Contact local Eaton representative					**V46D28B4516**
75							**V46D28B7516**
112.5							**V46D28B1216**
150							**V46D28B4916**
225							**V46D28B2216**
300							**V46D28B3316**
500							**V46D28B5516**
750							**V46D28B7716**

Note

Contact your local Eaton sales office for CE Mark transformer requirements. For other ratings or catalog numbers not shown, or for special enclosure types (including stainless steel), refer to Eaton.

Three-Phase—Medium-Voltage Distribution Transformers 60 Hz DOE 2016 Energy-Efficient— Copper Windings

2400 Delta Volts to 480Y/277 Volts

kVA	Temperature Rise °C	Frame	Wiring Diagram	Weight Lb (kg)	Type 3R WS Kit	Wallmount Bracket	Catalog Number
45	150	Contact local Eaton representative					**V42D47T4516CU**
75							**V42D47T7516CU**
112.5							**V42D47T1216CU**
150							**V42D47T4916CU**
225							**V42D47T2216CU**
300							**V42D47T3316CU**
500							**V42D47T5516CU**
750							**V42D47T7716CU**
45	115	Contact local Eaton representative					**V42D47F4516CU**
75							**V42D47F7516CU**
112.5							**V42D47F1216CU**
150							**V42D47F4916CU**
225							**V42D47F2216CU**
300							**V42D47F3316CU**
500							**V42D47F5516CU**
750							**V42D47F7716CU**
45	80	Contact local Eaton representative					**V42D47B4516CU**
75							**V42D47B7516CU**
112.5							**V42D47B1216CU**
150							**V42D47B4916CU**
225							**V42D47B2216CU**
300							**V42D47B3316CU**
500							**V42D47B5516CU**
750							**V42D47B7716CU**

Note

Contact your local Eaton sales office for CE Mark transformer requirements. For other ratings or catalog numbers not shown, or for special enclosure types (including stainless steel), refer to Eaton.

Three-Phase—Medium-Voltage Distribution Transformers 60 Hz DOE 2016 Energy-Efficient— Copper Windings

4160 Delta Volts to 480Y/277 Volts

kVA	Temperature Rise °C	Frame	Wiring Diagram	Weight Lb (kg)	Type 3R WS Kit	Wallmount Bracket	Catalog Number
45	150	Contact local Eaton representative					**V46D47T4516CU**
75							**V46D47T7516CU**
112.5							**V46D47T1216CU**
150							**V46D47T4916CU**
225							**V46D47T2216CU**
300							**V46D47T3316CU**
500							**V46D47T5516CU**
750							**V46D47T7716CU**
45	115	Contact local Eaton representative					**V46D47F4516CU**
75							**V46D47F7516CU**
112.5							**V46D47F1216CU**
150							**V46D47F4916CU**
225							**V46D47F2216CU**
300							**V46D47F3316CU**
500							**V46D47F5516CU**
750							**V46D47F7716CU**
45	80	Contact local Eaton representative					**V46D47B4516CU**
75							**V46D47B7516CU**
112.5							**V46D47B1216CU**
150							**V46D47B4916CU**
225							**V46D47B2216CU**
300							**V46D47B3316CU**
500							**V46D47B5516CU**
750							**V46D47B7716CU**

Note

Contact your local Eaton sales office for CE Mark transformer requirements. For other ratings or catalog numbers not shown, or for special enclosure types (including stainless steel), refer to Eaton.

Three-Phase—Medium-Voltage Distribution Transformers 60 Hz DOE 2016 Energy-Efficient— Copper Windings

2400 Delta Volts to 208Y/120 Volts

kVA	Temperature Rise °C	Frame	Wiring Diagram	Weight Lb (kg)	Type 3R WS Kit	Wallmount Bracket	Catalog Number
45	150	Contact local Eaton representative					**V42D28T4516CU**
75							**V42D28T7516CU**
112.5							**V42D28T1216CU**
150							**V42D28T4916CU**
225							**V42D28T2216CU**
300							**V42D28T3316CU**
500							**V42D28T5516CU**
750							**V42D28T7716CU**
45	115	Contact local Eaton representative					**V42D28F4516CU**
75							**V42D28F7516CU**
112.5							**V42D28F1216CU**
150							**V42D28F4916CU**
225							**V42D28F2216CU**
300							**V42D28F3316CU**
500							**V42D28F5516CU**
750							**V42D28F7716CU**
45	80	Contact local Eaton representative					**V42D28B4516CU**
75							**V42D28B7516CU**
112.5							**V42D28B1216CU**
150							**V42D28B4916CU**
225							**V42D28B2216CU**
300							**V42D28B3316CU**
500							**V42D28B5516CU**
750							**V42D28B7716CU**

Note

Contact your local Eaton sales office for CE Mark transformer requirements. For other ratings or catalog numbers not shown, or for special enclosure types (including stainless steel), refer to Eaton.

Three-Phase—Medium-Voltage Distribution Transformers 60 Hz DOE 2016 Energy-Efficient— Copper Windings

4160 Delta Volts to 208Y/120 Volts

kVA	Temperature Rise °C	Frame	Wiring Diagram	Weight Lb (kg)	Type 3R WS Kit	Wallmount Bracket	Catalog Number
45	150	Contact local Eaton representative					**V46D28T4516CU**
75							**V46D28T7516CU**
112.5							**V46D28T1216CU**
150							**V46D28T4916CU**
225							**V46D28T2216CU**
300							**V46D28T3316CU**
500							**V46D28T5516CU**
750							**V46D28T7716CU**
45	115	Contact local Eaton representative					**V46D28F4516CU**
75							**V46D28F7516CU**
112.5							**V46D28F1216CU**
150							**V46D28F4916CU**
225							**V46D28F2216CU**
300							**V46D28F3316CU**
500							**V46D28F5516CU**
750							**V46D28F7716CU**
45	80	Contact local Eaton representative					**V46D28B4516CU**
75							**V46D28B7516CU**
112.5							**V46D28B1216CU**
150							**V46D28B4916CU**
225							**V46D28B2216CU**
300							**V46D28B3316CU**
500							**V46D28B5516CU**
750							**V46D28B7716CU**

Note

Contact your local Eaton sales office for CE Mark transformer requirements. For other ratings or catalog numbers not shown, or for special enclosure types (including stainless steel), refer to Eaton.

Dry-Type Distribution Transformers



Contents

Description	*Page*
Standards and Certifications	**V2-T2-161**
Catalog Number Selection	**V2-T2-162**
Product Selection	**V2-T2-165**
Options and Accessories	**V2-T2-167**
Technical Data and Specifications	**V2-T2-171**
Glossary of Transformer Terms	**V2-T2-198**
Frequently Asked Questions About Transformers	**V2-T2-202**

Standards and Certifications

Eaton dry-type distribution transformers are approved, listed, recognized or may comply with the following standards.

Engineering Standards

Catalog Product Name	UL Standard ①	UL/cUL File Number	UL Listed Control Number	cUL Energy Efficiency Verification File Number	CSA File Number	Insulation System Temp/°C	kVA Single-Phase	kVA Three-Phase	Applicable IEC Standard
Industrial Control Transformer									
MTE	5085	E46323	702X	—	—	105	0.025–1.5	N/A	61558
MTK	5085	E46323	702X	—	—	180	0.05–5	N/A	61558
Encapsulated Transformer									
AP	5085	E10156	591H	—	—	180	3–10	N/A	61558
AP	1561	E78389	591H	—	—	180	15	N/A	61558
EP	5085	E10156	591H	—	LR60545	180	0.05–10	N/A	61558
EP	1561	E78389	591H	—	LR60545 ③	180	15–37.5	N/A	61558 ④ / 726 ⑤
EPT	5085	E10156	591H	—	LR60545	180	N/A	3–9	61558 ⑥ / 726 ⑦
EPT	1561	E78389	591H	—	LR60545 ⑨	180	N/A	15–75	726
MPC	1062	E53449	591H	—	LR60546	180	3–25	15–30	—
Ventilated Transformer									
DS-3	1561	E78389	591H	EV33871 ②	—	220	7.5–167	N/A	60726
DT-3	1561	E78389	591H	EV33871 ⑧	—	220	N/A	7.5–750	60726
KT	1561	E78389	591H	EV33871 ⑧	—	220	N/A	7.5–500	N/A

Notes

① UL 5085 replaces UL 506.
② Applies to 15–167 kVA.
③ Applies to 25 kVA.
④ Applies to 15–25 kVA.
⑤ Applies to 37.5 kVA.
⑥ Applies to 3 kVA.
⑦ Applies to 5–9 kVA.
⑧ Applies to 15–300 kVA.
⑨ Applies to 30 kVA.

In addition to the above standards, Eaton dry-type distribution transformers are also manufactured in compliance with the applicable standards listed below.

Not all of the following standards apply to every transformer.

NEC: National Electrical Code

NEMA ST-1: Specialty Transformers (C89.1) (control transformers).

NEMA ST-20: General-Purpose Transformers.

DOE 2016 Final Rule: CFR Title 10 Chapter II Part 431, Appendix A of Subpart K 2016.

NEMA 250: Enclosures for Electrical Equipment (1000 volts maximum).

IEEE C57.12.01: General Requirements for Dry-Type Distribution and Power Transformers (including those with solid-cast and/or resin-encapsulated windings).

ANSI C57.12.70: Terminal Markings and Connections for Distribution and Power Transformers.

ANSI C57.12.91: Standard Test Code for Dry-Type Distribution and Power Transformers.

CSA C22 No. 47-M90: Air-Cooled Transformers (Dry-Type).

CSA C9-M1981: Dry-Type Transformers.

CSA C22.2 No. 66: Specialty Transformers.

CSA 802-94: Maximum Losses for Distribution, Power and Dry-Type Transformers.

NEMA TP-1: Guide for Determining Energy Efficiency for Distribution Transformers (rescinded).

NEMA TP-2: Standard Test Method for Measuring the Energy Consumption of Distribution Transformers (rescinded).

NEMA TP-3: Standard for the Labeling of Distribution Transformer Efficiency (rescinded).

Listed

Listed

Listed

Energy Verified

Catalog Number Selection

Use table for catalog number breakdown only.
Do not use to create catalog numbers because all combinations may not be valid.

2

DOE 2016 Efficient Transformers, Shielded Isolation, Nonlinear K-Factor, Marine Duty Transformers—Example: V48M28B7516CUESLS47

__ V 48 M 28 B 75 16 CU ES LS47

Prefix Options

C	= CSA labeled ventilated transformer
Marine Duty	
R	= DS-3M marine (1-Ph ventilated)
M	= DT-3M marine (3-Ph ventilated)

Type

T	= DS-3 (single-phase ventilated)
V	= DT-3 (three-phase ventilated)
Nonlinear	
H	= KT-4 (three-phase ventilated)
B	= KT-9 (three-phase ventilated)
N	= KT-13 (three-phase ventilated)
G	= KT-20 (three-phase ventilated)
J	= KT-30 (three-phase ventilated)
HT	= KT-4 (single-phase ventilated)
NT	= KT-13 (single-phase ventilated)
GT	= KT-20 (single-phase ventilated)

Primary Voltage

13	= 110 x 220
12	= 120
10	= 120 x 240
29	= 208
72	= 200
25	= 220
23	= 230
24	= 240
20	= 240 x 480
27	= 277
38	= 380
39	= 400
43	= 416
44	= 440
45	= 450
48	= 480
57	= 575
60	= 600
42	= 2400
46	= 4160
49	= 4800

kVA

15 = 15	**75** = 75	**33** = 300
21 = 22.5	**99** = 100	**54** = 333
25 = 25	**12** = 112.5	**55** = 500
30 = 30	**49** = 150	**60** = 600
37 = 37.5	**67** = 167	**77** = 750
45 = 45	**22** = 225	**11** = 1000
50 = 50	**52** = 250	**14** = 1500

DOE 2016

16	= DOE 2016

Suffix Options

ES	= ①
CU	= ②
SS	= ③
ZZ	= ④
DE	= ⑤
LS_ _	= ⑥
AF	= ⑦
TR	= ⑧
SR	= ⑨
CE	= ⑩
T	= ⑪
HD	= ⑫
DN	= ⑬
S6	= ⑭
I2	= ⑮
I3	= ⑯
I4	= ⑰

Temperature Rise

T = 150°C rise with 220°C insulation system (ventilated three-phase)	**G** = 115°C rise with 200°C insulation system (ventilated)
F = 115°C rise with 220°C insulation system (ventilated)	**J** = 80°C rise with 200°C insulation system (ventilated)
B = 80°C rise with 220°C insulation system (ventilated)	**S** = 150°C rise with 220°C insulation system (ventilated single-phase)
H = 130°C rise with 200°C insulation system (ventilated)	

Taps

D	= 2 at +2.5%, 2 at –2.5%
E	= 1 at +5%, 1 at –5%
F	= 1 at –10%
G	= 2 at –5%
J	= 4 at –2.5%
K	= 1 at –10% x 2 at –5%
L	= 2 at –5% x 4 at –2.5%
M	= 2 at +2.5%, 4 at –2.5%
N	= None
R	= 1 at +5%, 2 at –5%
P	= 1 at +5%, 2 at –5% x 2 at +2.5%, 4 at –2.5%
T	= 1 at +4.2%, 1 at –4.2%
U	= 1 at +2.5%, 3 at –2.5%
W	= 1 at +3.5%, 1 at –3.5%
X	= 2 at +3.1%, 2 at –3.1%

Secondary Voltage

14 = 110/220	**38** = 380 delta
12 = 120	**37** = 380Y/220
11 = 120/240	**34** = 400Y/231
54 = 127/254	**51** = 416Y/240
19 = 190Y/110	**35** = 440Y/254
28 = 208Y/120	**62** = 460Y/266
29 = 208	**47** = 480Y/277
25 = 220 delta	**48** = 480 delta
31 = 220Y/127	**60** = 600 delta
26 = 220 delta/110 midtap	**61** = 600Y/346
22 = 240 delta/120 midtap	**42** = 2400
64 = 240Y/139	**41** = 4160Y/2400
24 = 240 delta	**46** = 4160
21 = 240/480	**49** = 4800
27 = 277	

Notes

① Electrostatic shield.
② Copper windings.
③ Grade 304 stainless steel enclosure (does not imply a NEMA 4X rating).
④ Open type core and coil assembly.
⑤ Double aluminum electrostatic shield.
⑥ Low sound design. LS47 indicates low sound equal to 47 dB; LS42 indicates 42 dB.
⑦ Fungus proof.
⑧ Certified test report of standard production tests for the specific serial number to be shipped.
⑨ Certified sound level report.
⑩ CE Marked.
⑪ Thermal indicator embedded in center coil. Suffix "TT" indicates two thermal indicators of different temperature ratings, are installed.
⑫ Hinged front door.
⑬ Double neutral.
⑭ Grade 316 stainless steel enclosure (does not imply NEMA 4X rating).
⑮ Integral 2-inch infrared viewing window.
⑯ Integral 3-inch infrared viewing window.
⑰ Integral 4-inch infrared viewing window.

For Eaton's industrial control transformers catalog number selection, see Volume 7—Logic Control, Operator Interface and Connectivity Solutions, **CA08100008E**, Tab 7.

Contact your local Eaton sales office for voltage combinations not shown.

Use table for catalog number breakdown only.
Do not use to create catalog numbers because all combinations may not be valid.

General-Purpose, NEMA TP-1 Energy-Efficient, Mini–Power Center, Shielded Isolation, Nonlinear K-Factor, Buck-Boost, Marine Duty Transformers—Example: S20N11S05A

_ S 20 N 11 S 05 A

Prefix Options

C = CSA labeled ventilated transformer

Marine Duty
Q = EPM marine (1-Ph encapsulated)
L = EPTM Marine (3-Ph encapsulated)
R = DS-3M marine (1-Ph ventilated)
M = DT-3M marine (3-Ph ventilated)

Type

S = EP (single-phase encapsulated)
Y = EPT (three-phase encapsulated)
T = DS-3 (single-phase ventilated)
V = DT-3 (three-phase ventilated)
P = Mini–power center
Z = Class 1 Division 2 Groups A, B, C, D

Nonlinear
H = KT-4 (three-phase ventilated)
B = KT-9 (three-phase ventilated)
N = KT-13 (three-phase ventilated)
G = KT-20 (three-phase ventilated)
J = KT-30 (three-phase ventilated)
HT = KT-4 (single-phase ventilated)
NT = KT-13 (single-phase ventilated)
GT = KT-20 (single-phase ventilated)

Primary Voltage

13 = 110 x 220
12 = 120
10 = 120 x 240
29 = 208
72 = 200
25 = 220
23 = 230
24 = 240
20 = 240 x 480
27 = 277
38 = 380
39 = 400
43 = 416
44 = 440
45 = 450
48 = 480
57 = 575
60 = 600
42 = 2400
46 = 4160
49 = 4800
40 = Export model
54 = 120/208/240/277

Taps

D = 2 at +2.5%, 2 at –2.5%
E = 1 at +5%, 1 at –5%
F = 1 at –10%
G = 2 at –5%
J = 4 at –2.5%
K = 1 at –10% x 2 at –5%
L = 2 at –5% x 4 at –2.5%
M = 2 at +2.5%, 4 at –2.5%
N = None
R = 1 at +5%, 2 at –5%
P = 1 at +5%, 2 at –5% x 2 at +2.5%, 4 at –2.5%
T = 1 at +4.2%, 1 at –4.2%
U = 1 at +2.5%, 3 at –2.5%
W = 1 at +3.5%, 1 at –3.5%
X = 2 at +3.1%, 2 at –3.1%

kVA

81 = 0.05	**03** = 3	**37** = 37.5	**52** = 250
85 = 0.075	**05** = 5	**45** = 45	**33** = 300
82 = 0.10	**06** = 6	**50** = 50	**54** = 333
83 = 0.15	**07** = 7.5	**75** = 75	**55** = 500
26 = 0.25	**09** = 9	**99** = 100	**60** = 600
51 = 0.50	**10** = 10	**12** = 112.5	**77** = 750
76 = 0.75	**15** = 15	**49** = 150	**11** = 1000
01 = 1	**21** = 22.5	**67** = 167	**14** = 1500
16 = 1.5	**25** = 25	**22** = 225	
02 = 2	**30** = 30		

Temperature Rise

T = 150°C rise with 220°C insulation system (ventilated); 115°C rise with 180°C insulation system (encapsulated and MPC three-phase)
F = 115°C rise with 220°C insulation system (ventilated)
B = 80°C rise with 220°C insulation system (ventilated); 80°C rise with 180°C insulation system (encapsulated)
H = 130°C rise with 200°C insulation system (ventilated)
G = 115°C rise with 200°C insulation system (ventilated)
J = 80°C rise with 200°C insulation system (ventilated)
P = 115°C rise with 130°C insulation system (encapsulated single-phase ≤2 kVA)
S = 115°C rise with 180°C insulation system (encapsulated and MPC single-phase); 150°C rise with 220°C insulation system (ventilated single-phase)
E = Electrostatically shielded

Secondary Voltage

04 = 12/24	**31** = 220Y/127	**35** = 440Y/254
06 = 16/32	**26** = 220 delta/110 midtap	**62** = 460Y/266
08 = 24/48	**22** = 240 delta/120 midtap	**47** = 480Y/277
14 = 110/220	**64** = 240Y/139	**48** = 480 delta
12 = 120	**24** = 240 delta	**60** = 600 delta
11 = 120/240	**21** = 240/480	**61** = 600Y/346
54 = 127/254	**27** = 277	**42** = 2400
19 = 190Y/110	**38** = 380 delta	**41** = 4160Y/2400
28 = 208Y/120	**37** = 380Y/220	**46** = 4160
29 = 208	**34** = 400Y/231	**49** = 4800
25 = 220 delta	**51** = 416Y/240	

Suffix Options

A...Y = ①
CU = ②
SS = ③
ZZ = ④
NV = ⑤
X = ⑥
LS_ _ = ⑦
AF = ⑧
TR = ⑨
SR = ⑩
CE = ⑪
T = ⑫
E3 = ⑬
SS4X = ⑭
Z = ⑮
S6 = ⑯
I2 = ⑰
I3 = ⑱
I4 = ⑲
ES = ⑳
DE = ㉑
DN = ㉒
EE = ㉓
E6 = ㉔
EE6 = ㉕

Notes

① Model number is not used on newly designed/redesigned transformers.
② Copper windings.
③ Grade 304 stainless steel enclosure (does not imply a NEMA 4X rating).
④ Open type core and coil assembly.
⑤ Totally enclosed non-ventilated DS-3 or DT-3.
⑥ 50/60 Hz.
⑦ Low sound design. LS47 indicates low sound equal to 47 dB; LS42 indicates 42 dB.
⑧ Fungus proof.
⑨ Certified test report of standard production tests for the specific serial number to be shipped.
⑩ Certified sound level report.
⑪ CE Marked.
⑫ Thermal indicator embedded in center coil. Suffix "TT" indicates two thermal indicators of different temperature ratings, are installed.
⑬ CSL3 DOE 2007 energy-efficient.
⑭ NEMA 4X Grade 304 stainless steel enclosure.
⑮ Easy install base.
⑯ Grade 316 stainless steel enclosure (does not imply NEMA 4X rating).
⑰ Integral 2-inch infrared viewing window.
⑱ Integral 3-inch infrared viewing window.
⑲ Integral 4-inch infrared viewing window.
⑳ Electrostatic shield.
㉑ Double aluminum electrostatic shield.
㉒ Double neutral.
㉓ TP-1 energy-efficient.
㉔ 2016 enclosure construction (Non-TP1 energy-efficient).
㉕ TP-1 energy-efficient with 2016 enclosure construction.

For Eaton's industrial control transformers catalog number selection, see Volume 7—Logic Control, Operator Interface and Connectivity Solutions, **CA08100008E**, Tab 7.

Contact your local Eaton sales office for voltage combinations not shown.

Use table for catalog number breakdown only.
Do not use to create catalog numbers because all combinations may not be valid.

2

Motor Drive Isolation Transformers—Example: MD145E89B

MD 145 E 89 B

Type	
MD	= DT-3
HD	= KT-4
ND	= KT-13

kVA			
075	= 7.5	**175**	= 175
11	= 11	**220**	= 220
14	= 14	**275**	= 275
20	= 20	**330**	= 330
27	= 27	**440**	= 440
34	= 34	**550**	= 550
40	= 40	**660**	= 660
51	= 51	**770**	= 770
63	= 63	**880**	= 880
75	= 75	**1000**	= 1000
93	= 93	**1250**	= 1250
118	= 118	**1500**	= 1500
145	= 145		

Taps ①
D = 2 at +2.5%, 2 at –2.5%
E = 1 at +5%, 1 at –5%

Voltage			
		Primary	**Secondary**
82	=	230 delta	208Y/120
83	=	208 delta	208Y/120
84	=	240 delta	480 delta
85	=	208 delta	230Y/133
86	=	208 delta	460Y/266
87	=	208 delta	480 delta
88	=	230 delta	230Y/133
89	=	230 delta	460Y/266
90	=	230 delta	575Y/332
91	=	460 delta	230Y/133
92	=	460 delta	460Y/266
93	=	460 delta	575Y/332
94	=	575 delta	230Y/133
95	=	575 delta	460Y/266
96	=	575 delta	575Y/332
97	=	575 delta	480 delta
98	=	600 delta	480 delta

Suffix Options	
Y	= Encapsulated (Type EPT) design ②
ES	= Electrostatic shield
CU	= Copper windings
F	= 115°C rise
B	= 80°C rise
X	= 50/60 Hz

Notes

① For other tap combinations, contact your local Eaton sales office.

② Available up to 34 kVA.

Contact your local Eaton sales office for voltage combinations not shown.

Product Selection

Single-Phase Transformers

How to Select Single-Phase Units

1. Determine the primary (source) voltage—the voltage presently available.
2. Determine the secondary (load) voltage—the voltage needed at the load.
3. Determine the kVA load:
   - If the load is defined in kVA, a transformer can be selected from the tabulated data
   - If the load rating is given in amperes, determine the load kVA from the chart (below right). To determine kVA when volts and amperes are known, use the formula:

$$kVA = \frac{Volts \times Amperes}{1000}$$

   - If the load is an AC motor, determine the minimum transformer kVA from the chart at the right
   - Select a transformer rating equal to or greater than the load kVA.
4. Define tap arrangements needed.
5. Define temperature rise.

Using the above procedure, select the transformer from the listings in this catalog.

Single-Phase AC Motors

Horsepower	Full Load Amperes 115 Volts	208 Volts	220 Volts	230 Volts	Minimum Transformer kVA ①
1/6	4.4	2.4	2.3	2.2	0.53
1/4	5.8	3.2	3.0	2.9	0.70
1/3	7.2	4.0	3.8	3.6	0.87
1/2	9.8	5.4	5.1	4.9	1.18
3/4	13.8	7.6	7.2	6.9	1.66
1	16	8.8	8.4	8	1.92
1-1/2	20	11.0	10.4	10	2.40
2	24	13.2	12.5	12	2.88
3	34	18.7	17.8	17	4.10
5	56	30.8	29.3	28	6.72
7-1/2	80	44	42	40	9.6
10	100	55	52	50	12.0

Full Load Current in Amperes—Single-Phase Circuits

kVA	Voltage 120	208	220	240	277	480	600	2400	4160
0.25	2.0	1.2	1.1	1.0	0.9	0.5	0.4	0.10	0.06
0.50	4.2	2.4	2.3	2.1	1.8	1.0	0.8	0.21	0.12
0.75	6.3	3.6	3.4	3.1	2.7	1.6	1.3	0.31	0.18
1	8.3	4.8	4.5	4.2	3.6	2.1	1.7	0.42	0.24
1.5	12.5	7.2	6.8	6.2	5.4	3.1	2.5	0.63	0.36
2	16.7	9.6	9.1	8.3	7.2	4.2	3.3	0.83	0.48
3	25	14.4	13.6	12.5	10.8	6.2	5.0	1.2	0.72
5	41	24.0	22.7	20.8	18.0	10.4	8.3	2.1	1.2
7.5	62	36	34	31	27	15.6	12.5	3.1	1.8
10	83	48	45	41	36	20.8	16.7	4.2	2.4
15	125	72	68	62	54	31	25	6.2	3.6
25	208	120	114	104	90	52	41	10.4	6.0
37.5	312	180	170	156	135	78	62	15.6	9.0
50	416	240	227	208	180	104	83	20.8	12.0
75	625	360	341	312	270	156	125	31.3	18.0
100	833	480	455	416	361	208	166	41.7	24.0
167	1391	802	759	695	602	347	278	69.6	40.1

Notes

① If motors are started more than once per hour, increase minimum transformer kVA by 20%.

When motor service factor is greater than 1, increase full load amperes proportionally. Example: If service factor is 1.15, increase above ampere values by 15%.

Three-Phase Transformers

How to Select Three-Phase Units

1. Determine the primary (source) voltage—the voltage presently available.
2. Determine the secondary (load) voltage—the voltage needed at the load.
3. Determine the kVA load:
   - If the load is defined in kVA, a transformer can be selected from the tabulated data
   - If the load rating is given in amperes, determine the load kVA from the chart (below right). To determine kVA when volts and amperes are known, use the formula:

$$kVA = \frac{Volts \times Amperes \times 1.732}{1000}$$

   - If the load is an AC motor, determine the minimum transformer kVA from the chart at the right
   - Select a transformer rating equal to or greater than the load kVA
4. Define tap arrangements needed.
5. Define temperature rise.

Using the above procedure, select the transformer from the listings in this catalog.

Three-Phase AC Motors

	Full Load Amperes					Minimum Transformer kVA ①
Horsepower	208 Volts	230 Volts	380 Volts	460 Volts	575 Volts	
0.5	2.2	2.0	1.2	1.0	0.8	0.9
3/4	3.1	2.8	1.7	1.4	1.1	1.2
1	4.0	3.6	2.2	1.8	1.4	1.5
1.5	5.7	5.2	3.1	2.6	2.1	2.1
2	7.5	6.8	4.1	3.4	2.7	2.7
3	10.7	9.6	5.8	4.8	3.9	3.8
5	16.7	15.2	9.2	7.6	6.1	6.3
7.5	24	22	14	11	9	9.2
10	31	28	17	14	11	11.2
15	46	42	26	21	17	16.6
20	59	54	33	27	22	21.6
25	75	68	41	34	27	26.6
30	88	80	48	40	32	32.4
40	114	104	63	52	41	43.2
50	143	130	79	65	52	52
60	170	154	93	77	62	64
75	211	192	116	96	77	80
100	273	248	150	124	99	103
125	342	312	189	156	125	130
150	396	360	218	180	144	150
200	528	480	291	240	192	200

Full Load Current in Amperes—Three-Phase Circuits

	Voltage						
kVA	208	240	380	480	600	2400	4160
3	8.3	7.2	4.6	3.6	2.9	0.72	0.42
6	16.6	14.4	9.1	7.2	5.8	1.4	0.83
9	25	21.6	13.7	10.8	8.6	2.2	1.2
15	41.7	36.1	22.8	18.0	14.4	3.6	2.1
22.5	62.4	54.1	34.2	27.1	21.6	5.4	3.1
30	83.4	72.3	45.6	36.1	28.9	7.2	4.2
37.5	104	90.3	57.0	45.2	36.1	9.0	5.2
45	124	108	68.4	54.2	43.4	10.8	6.3
50	139	120	76	60.1	48.1	12.0	6.9
75	208	180	114	90	72	18.0	10.4
112.5	312	270	171	135	108	27.1	15.6
150	416	360	228	180	144	36.1	20.8
225	624	541	342	270	216	54.2	31.3
300	832	721	456	360	288	72.2	41.6
500	1387	1202	760	601	481	120	69.4
750	2084	1806	1140	903	723	180	104
1000	2779	2408	1519	1204	963	241	139

Notes

① If motors are started more than once per hour, increase minimum transformer kVA by 20%.

When motor service factor is greater than 1, increase full load amperes proportionally.
Example: If service factor is 1.15, increase above ampere values by 15%.

Options and Accessories

(Order separately)

Weathershield Kit

A weathershield kit consisting of a front and rear cover shield must be installed on all ventilated dry-type distribution transformers when the unit is located outdoors. The shields protect the transformer top ventilation openings against rain but allow for proper ventilation.

Field installation hardware is not required. Refer to specific transformer listing for selection of weathershield kit. Proper installation provides a NEMA 3R rating.

Note: For 316 stainless steel, add the suffix 'S' to the catalog number.

Weathershield Kit



Weathershield Kit

Fits Frame Size(s) ①	Catalog Number ②
809, 810, 811, 816, 817, 818	**WS11**
814, 814E	**WS13**
815	**WS15**
819, 820	**WS16**
808, 908, 909, 910, 911, 912, 910A, 911A, 912A	**WS31**
912B, 912Z, 912D	**WS38**
812, 813, 913A, 913B, 914A, 915A, 916, 914B, 915B	**WS33**
914D, 915D, 914F, 915F, 914Z, 915Z	**WS39**
916A, 916B, 912Z	**WS19**
917, 918, 918A	**WS34**
919, 920, 919E, 919EX, 920E, 920EX	**WS35**
922	**WS36**
923	**WS37**
842	**WS45**
842A	**WS45A**
843	**WS43**
843A	**WS43A**
844	**WS44**
844A	**WS44A**
939	**WS57**
940	**WS58**
942	**WS59**
943	**WS60**
944	**WS61**
945	**WS62**

Terminal Extension Kit

A terminal extension kit is used to allow front access to the rear terminals on most 500 and 750 kVA transformers (transformers on frames 919 and 920) when insufficient space is available at the rear of the transformer. Eaton recommends a minimum 6-inch clearance from the wall to maintain proper ventilation.

Terminal Extension Kit

Fits Frame Size(s) ①	Bus Material	Catalog Number
919	Aluminum	**EXT55AL**
919	Copper	**EXT55CU**
920	Aluminum	**EXT77AL**
920	Copper	**EXT77CU**

Wall-Mounting Bracket

Wall-mounting brackets are used to wall-mount ventilated transformers. This bracket allows the transformer to be installed with the proper clearance, as recommended by Eaton.

Wall-mounting brackets are compatible with the following frames.

Wall-Mounting Bracket



Availability Guide Wall-Mounting Brackets

Frame Sizes ①	Catalog Number
Type DS-3 (Single-Phase Compatible)	
809, 810, 811, 812, 813, 815, 816, 817, 818, 835, 836, 837, 814A, 842	**WMB01**
Type DT-3, K-Factor, Drive Isolation (Three-Phase Compatible)	
908, 909, 910, 911, 912, 910A, 911A, 912A, 912B, 912D, 913A, 913B, 914A, 914B, 914D, 915D, 915A, 915B, 914F, 915F, 912Z, 914Z, 915Z	**WMB01**
842A, 939, 940	**WMB05**
843A, 844A, 942, 943	**WMB04**

Notes

① Effective June 1, 2001, frame numbers will have a prefix of FR, e.g., **FR819**. Dimensions, accessories and so on are still applicable as if the FR did not exist.

② For Grade 316 stainless steel weathershields, add the suffix "S" to a catalog number, e.g., **WS31S**.

Terminal Lug Kits for Transformers ①

Typical Sizing	Terminal Lugs Cable Range	Quantity	Hardware Bolt Size	Quantity	Catalog Number
15–37.5 kVA single-phase 15–45 kVA three-phase	#14–#2 #6–250 kcmil	8 4	1/4-20 x 3/4	8	**LKS1**
50–75 kVA single-phase 75–112.5 kVA three-phase	#6–250 kcmil	12	1/4-20 x 3/4 1/4-20 x 1-3/4	8 8	**LKS2**
100–167 kVA single-phase 150–300 kVA three-phase	#6–250 kcmil #2–600 kcmil	3 22	1/4-20 x 3/4 3/8-16 x 2	3 16	**LKS3**
500 kVA three-phase	#2–600 kcmil	29	3/8-16 x 2	18	**LKS4**

Rodent Screens

Description	Frame Size(s) ②	Catalog Number
Rodent screens are used to discourage birds or rodents from entering the enclosure through the ventilation openings. Stainless steel screens are not available.	908, 909	**RS01**
	910A, 911, 912	**RS02**
	913B, 914B, 915B	**RS03**
	916	**RS04**
	917, 918, 918A	**RS05**
	919, 920, 919E, 919EX, 920E, 920EX	**RS06**
	916A, 916B	**RS07**
	922	**RS08**
	923	**RS09**
	814, 821, 814E	**RS11**
	815	**RS12**
	816	**RS13**
	817, 818	**RS14**
	819, 820	**RS15**
	842	**RS45**
	842A	**RS45A**
	843	**RS43**
	843A	**RS43A**
	844	**RS44**
	844A	**RS44A**
	912B, 912Z, 912D	**RS16**
	914D, 915D, 914F, 915F, 914Z, 915Z	**RS17**
	916Z	**RS07**
	939	**RS57**
	940	**RS58**
	942	**RS59**
	943	**RS60**
	944	**RS61**
	945	**RS62**

Replacement Parts for Mini–Power Centers

Frame	Deadfront Cover (Breaker Cover)	Front Cover
283	47-37503	7074C98H04
284	47-37503-2	7074C98H01
285	47-37503-3	7074C98H02
286	47-37503-4	7074C98H02
287	47-37503-5	7074C98H03
289	47-37459	7074C44H01
290	47-37459-2	7074C44H02
291	47-37459-3	7074C44H03
289A	47-42072-1	7074C44H01
290A	47-42072-2	7074C44H02
291A	47-42072-3	7074C44H03

Notes

① Lugs are rated Al/Cu and are suitable for use with either aluminum or copper conductors.

② Effective June 1, 2001, frame numbers will have a prefix of FR, e.g., **FR819**. Dimensions, accessories and so on are still applicable as if the FR did not exist.

Case Parts for Ventilated Units

Frame(s) ①	Front Panel (Upper)	Front Panel (Lower)	Back Panel (Upper)	Back Panel (Lower)	Front or Back Panel (Cutout Cover Plate)	Top Cover	Side Panel (Two Required per Transformer)	Bottom
Single-Phase								
809	7073C16P03	—	7073C16P03	—	—	7073C17P01	7073C18P04	7073C14P03
810	7073C16P01	—	7073C16P01	—	—	7073C17P01	7073C18P01	7073C14P01
811	7073C16P01	—	7073C16P01	—	—	7073C17P01	7073C18P01	7073C14P01
812	7073C16P02	—	7073C16P02	—	—	7073C17P02	7073C18P02	7073C14P02
813	7073C16P02	—	7073C16P02	—	—	7073C17P02	7073C18P02	7073C14P02
814, 814E	7073C54P01	—	7073C54P01	—	—	7073C17P03	7073C18P05	7073C14P04
815	47-39433	—	47-39433	—	—	47-39431	47-39430	47-39429
816	47-40452	—	47-40452	—	—	47-40453	47-40451	47-40449
817	47-40457	—	47-40457	—	—	47-40458	47-40456	47-40454
818	47-40457	—	47-40457	—	—	47-40458	47-40456	47-40454
819	47-40574	—	47-40574	—	—	47-40575	47-40573	47-40459
820	47-40574	—	47-40574	—	—	47-40575	47-40573	47-40459
842	47-54828-2	—	47-54828-2	—	—	47-54829-2	47-54827-2	47-55335-2
842A	73-5915-1	—	73-5915-1	—	—	73-5916-1	73-5913-1	73-5914-1
843	47-54828-4	—	47-54828-4	—	—	47-54829-4	47-54827-4	47-55335-3
843A	73-5915-2	—	73-5915-2	—	—	73-5916-2	73-5913-2	73-5914-2
844	47-54828-5	—	47-54828-5	—	—	47-54829-5	47-54827-5	47-55335-5
844A	73-5915-3	—	73-5915-3	—	—	73-5916-3	73-5913-3	73-5914-3

Notes

① Effective June 1, 2001, frame numbers will have a prefix of FR, e.g., **FR819**. Dimensions, accessories and so on are still applicable as if the FR did not exist.

Parts listed are for standard catalog listed transformers. Units with modifications may require different parts. (Frame number from transformer nameplate required.)
Transformer nameplate and UL label are not field replaceable.

Case Parts for Ventilated Units, continued

Frame(s) ①	Front Panel (Upper)	Front Panel (Lower)	Back Panel (Upper)	Back Panel (Lower)	Front or Back Panel (Cutout Cover Plate)	Top Cover	Side Panel (Two Required per Transformer)	Bottom
Three-Phase								
908	7073C37P01	—	7073C37P01	—	—	1714C45P01	1714C44P03	7073C20P05
909	7073C37P01	—	7073C37P01	—	—	1714C45P01	1714C44P03	7073C20P05
910	1714C46P01	—	1714C46P01	—	—	1714C45P01	1714C44P01	7073C20P01
911	1714C46P01	—	1714C46P01	—	—	1714C45P01	1714C44P01	7073C20P01
912	1714C46P01	—	1714C46P01	—	—	1714C45P01	1714C44P01	7073C20P01
916	1714C60P01	—	1714C60P01	—	—	1714C58P01	1714C56P01	7073C20P03
917	47-44973-1	—	47-44973-1	—	—	1714C67P01	1714C64P01	7073C20P04
918	47-44973-1	—	47-44973-1	—	—	1714C67P01	1714C64P01	7073C20P04
919, 919E, 919EX	2D46331P03	2D46331P04	2D46331P03	2D46331P04	2D46331P01	2D46331P02	2D46332P01	2D46331P04
920, 920E, 920EX	2D46331P03	2D46331P04	2D46331P03	2D46331P04	2D46331P01	2D46331P02	2D46332P01	2D46331P04
922	2D46391H06	2D46391H08	2D46391H03	2D46391H08		2D46391H02	2D46392H01	—
923	47-45927-1	—	47-45927-1	—	—	47-45926-1	47-45925-1	47-45759-1
910A	47-40592	—	47-40592	—	—	1714C45P01	47-40591	47-40589
911A	47-40592	—	47-40592	—	—	1714C45P01	47-40591	47-40589
912A	47-40592	—	47-40592	—	—	1714C45P01	47-40591	47-40589
912B	47-49323-1	—	47-49323-1	—	—	47-49322-1	47-49321-1	47-49320-1
912D	47-55332-2	—	47-55332-2	—	—	47-55331-2	47-55329-2	47-55330-1
912DN	47-55332-4	—	47-55332-4	—	—	47-55331-2	47-55329-2	47-55330-3
913A	1714C47P03	—	1714C47P03	—	—	1714C45P02	1714C44P07	7073C30P02
913B	47-40580	—	47-40580	—	—	1714C45P02	47-40578	47-41792
914A	1714C47P03	—	1714C47P03	—	—	1714C45P02	1714C44P07	7073C30P02
914B	47-40580	—	47-40580	—	—	1714C45P02	47-40578	47-41792
914D	47-49317-1	—	47-49317-1	—	—	47-49316-1	47-49315-1	47-49314-1
914F/915F	47-56915-1	—	47-56915-1	—	—	47-56916-1	47-56917-1	47-56918-1
915A	1714C47P03	—	1714C47P03	—	—	1714C45P02	1714C44P07	7073C30P02
915B	47-40580	—	47-40580	—	—	1714C45P02	47-40578	47-41792
915D	47-49317-1	—	47-49317-1	—	—	47-49316-1	47-49315-1	47-49314-1
916A	47-41790	—	47-41790	—	—	47-41791	47-41789	47-41788
918A	47-41801	—	47-41801	—	—	47-41802	47-41800	47-41802
912Z	47-49323-1	—	47-49323-1	—	—	47-49322-1	47-49991-1	47-49989-1
915Z	47-49317-1	—	47-49317-1	—	—	47-49316-1	47-49994-1	47-49995-1
916Z	47-49992-1	—	47-49992-1	—	—	47-41791	47-49988-1	47-49987-1
939	73-5902-1	—	73-5902-1	—	—	73-5903-1	73-5900-1	73-5901-1
940	73-5902-2	—	73-5902-2	—	—	73-5903-2	73-5900-2	73-5901-2
942	73-5902-3	—	73-5902-3	—	—	73-5903-3	73-5900-3	73-5901-3
943	73-5902-4	—	73-5902-4	—	—	73-5903-4	73-5900-4	73-5901-4
944	73-5902-5	—	73-5902-5	—	—	73-5903-5	73-5900-5	73-5901-5
945	73-5902-6	—	73-5902-6	—	—	73-5903-6	73-5900-6	73-5901-6

Notes

① Effective June 1, 2001, frame numbers will have a prefix of FR, e.g., **FR819**. Dimensions, accessories and so on are still applicable as if the FR did not exist.

Parts listed are for standard catalog listed transformers. Units with modifications may require different parts. (Frame number from transformer nameplate required.)
Transformer nameplate and UL label are not field replaceable.

Technical Data and Specifications

Customer-Furnished Connecting Cables

Eaton recommends that external cables be rated 90°C (sized at 75°C ampacity) for encapsulated designs and 75°C for ventilated designs. **Primary and secondary terminal lugs are not included. Lug kits are available separately.**

Overload Capability

Short-term overload capacity is designed into transformers as required by ANSI. Dry-type distribution transformers will deliver 200% nameplate load for one-half hour, 150% load for one hour and 125% load for four hours without being damaged, provided that a constant 50% load precedes and follows the overload. See ANSI C57.96-01.250 for additional limitations.

Continuous overload capacity is not deliberately designed into a transformer because the design objective is to be within the allowed winding temperature rise with nameplate loading.

Seismically Qualified

Eaton manufactured dry-type distribution transformers are seismically qualified, and exceed requirements of the Uniform Building Code (UBC) and California Code Title 24.

Taps

Primary taps are available in most ratings to allow compensation for source voltage variations.

Series-Multiple Windings

Series-multiple windings consist of two similar coils in each winding that can be connected in series or parallel (multiple). Transformers with series-multiple windings are designated with a "x" or "/" between the voltage ratings, such as voltages of "120/240" or "240 x 480." If the series-multiple winding is designated by an "x," the winding can be connected only for a series or parallel. With the "/" designation, a midpoint also becomes available in addition to the series or parallel connection. As an example, a 120 x 240 winding can be connected for either 120 (parallel) or 240 (series), but a 120/240 winding can be connected for 120 (parallel), 240 (series) or 240 with a 120 midpoint.

Enclosures

Eaton's ventilated transformers—Types DS-3, DT-3, MD and KT—use a NEMA 2 rated (drip-proof) enclosure as standard, and are rated NEMA 3R with the addition of weathershields. Eaton encapsulated—Types EP, EPT, EPZ and EPTZ—and totally enclosed, non-ventilated (Types DS-3E and DT-3E) transformers use a NEMA 3R rated enclosure.

Buck-Boost Transformers

An autotransformer has only one winding, and is therefore smaller and more economical than the conventional two-winding transformer. In an autotransformer, the primary and secondary are electrically and mechanically connected. The required secondary voltage is obtained by "tapping-off" from the single winding.

Buck-boost autotransformers are insulated units with 120 x 240 or 240 x 480 volt primaries and 12/24, 16/32 or 24/48 volt secondaries, and provide a very economical method for minor voltage adjustments where circuit isolation is not needed.

Autotransformers can be used only where local electrical codes permit, and isolation of the two circuits is not required.

Nonlinear Ratings

The transformers shall be specifically designed to supply circuits with a harmonic profile equal to or less than a K-factor of 4 or 13, as described in the following table, without exceeding specified temperature rise.

Nonlinear Ratings

Harmonic	K-4	K-13
Fundamental	100.0%	100.0%
3rd	34.0%	70.0%
5th	22.0%	42.0%
7th	3.0%	5.0%
9th	1.0%	3.0%
11th	0.7%	3.0%
13th	0.5%	1.0%
15th	0.3%	0.7%
17th	0.3%	0.6%

Sound Levels

All Eaton 600 volt class general-purpose dry-type distribution transformers are designed to meet NEMA ST-20 sound levels listed here. These are the sound levels measured in a soundproof environment. Actual sound levels measured at an installation will likely be higher (up to 15 dB greater) due to electrical connections and environmental conditions. Lower sound levels are available and should be specified when the transformer is going to be installed in an area where sound may be a concern.

All Eaton general-purpose dry-type distribution transformers are designed with sound levels lower than NEMA ST-20 maximum levels. However, consideration should be given to the specific location of the transformers and their installation to minimize the potential for sound transmission to surrounding structures and sound reflection. It is suggested that the following installation methods be included:

1. If possible, mount the transformer away from corners of walls or ceilings. For installation that must be near a corner, use sound-absorbing materials on the walls and ceilings if necessary to eliminate reflection.
2. Provide a solid foundation for mounting the transformer and then use vibration dampening mounts if not already provided in the transformer. (Eaton encapsulated EP/EPT designs use a special encapsulation system and ventilated DS/DT-3 designs contain a built-in vibration dampening system to minimize and isolate sound transmission.)
3. Provide flexible conduit to make the connections to the transformer.
4. Locate the transformer as far as possible from areas where high sound levels are undesirable.

Average Sound Levels

NEMA ST-20 Average Sound Level, dB

Equivalent Winding kVA Range	Self-Cooled Ventilated (up to 1.2 kV) K-Factor 1, 4, 9	Self-Cooled Ventilated (up to 1.2 kV) K-Factor 13, 20	Encapsulated (up to 1.2 kV)
3.00 and below	40	40	45
3.01 to 9.00	40	40	45
9.01 to 15.00	45	45	50
15.01 to 30.00	45	45	50
30.01 to 50.00	45	48	50
50.01 to 75.00	50	53	55
75.01 to 112.50	50	53	55
112.51 to 150.00	50	53	55
150.01 to 225.00	55	58	57
225.01 to 300.00	55	58	57
300.01 to 500.00	60	63	59
500.01 to 700.00	62	65	61
700.01 to 1000.00	64	67	63
Greater than 1000	Consult factory	Consult factory	Consult factory

Typical Data for General-Purpose Dry-Type Distribution Transformers, Aluminum Wound ①

Type EP 115°C Rise

	Weight Lbs		Losses in Watts		Efficiency				% Regulation		% Impedance ②		
kVA	Al	Cu	No Load	Total	1/4 Load	1/2 Load	3/4 Load	Full Load	100% P.F.	80% P.F.	Min.	Max.	Sound Level dB
0.05	—	7	6	9	65.3	79.6	84.3	85.6	5.9	6.4	5.5	9.5	45
0.075	—	7	7	14	66.0	79.0	82.5	82.8	9.4	9.2	7.5	11.0	45
0.10	—	7	5	15	82.4	86.9	87.7	86.5	10.3	10.6	8.0	12.0	45
0.15	—	8	7	20	83.4	88.2	88.9	87.8	9.0	9.6	8.0	12.0	45
0.25	—	12	14	29	79.0	87.2	89.5	89.6	5.9	7.5	7.5	9.5	45
0.5	—	13	20	47	85.1	90.3	91.4	91.4	5.5	7.0	5.0	7.0	45
0.75	—	20	29	57	86.0	91.3	92.7	92.9	3.9	5.0	4.0	6.0	45
1	—	30	24	60	90.8	93.9	94.5	94.4	3.8	4.9	3.8	5.8	45
1.5	65	40	30	90	92.5	94.7	95.0	94.6	4.1	5.2	2.5	4.5	45
2	113	40	30	100	94.2	95.7	95.8	95.4	3.6	4.7	3.3	5.3	45
3	—	69	61	135	92.0	95.0	95.7	95.7	2.5	3.5	2.5	4.1	45
5	—	120	104	215	91.8	95.0	95.8	95.9	2.3	3.3	2.0	4.6	45
7.5	123	133	129	250	93.2	96.0	96.7	95.9	1.5	2.4	2.4	3.4	45
10	193	208	153	295	93.9	96.3	97.0	97.2	1.5	2.5	2.0	3.3	50
15	216	235	209	435	94.4	96.6	97.1	97.2	1.6	2.8	1.6	3.6	50
25	385	414	191	440	96.8	98.0	98.3	98.4	1.1	2.5	1.6	4.2	50
37.5	735	856	225	370	97.4	98.3	98.5	98.4	1.2	2.6	2.8	4.0	50

Type EPT 115°C Rise ③

	Weight Lbs		Losses in Watts		Efficiency				% Regulation		% Impedance ②		
kVA	Al	Cu	No Load	Total	1/4 Load	1/2 Load	3/4 Load	Full Load	100% P.F.	80% P.F.	Min.	Max.	Sound Level dB
3	116	123	110	165	87.3	92.6	94.3	94.9	2.1	6.1	2.4	8.0	45
6	143	153	145	275	90.9	94.5	95.5	95.7	2.2	3.1	2.9	4.9	45
9	166	178	195	375	91.6	95.0	95.9	96.1	2.0	2.8	2.0	3.6	45
15	275	300	265	545	93.0	95.7	96.5	96.6	1.9	3.1	1.9	3.9	50
30	422	504	250	665	96.5	97.7	98.0	97.9	1.5	2.5	1.8	3.8	50
45	660	745	300	740	97.2	98.2	98.4	98.5	1.0	2.1	1.8	4.0	50
75	1275	1450	400	945	97.7	98.6	98.8	98.8	0.8	1.6	1.7	3.4	55

Notes

① Typical values for aluminum windings. Contact Eaton for values of copper windings. Up-to-date design data is available at www.eaton.com.

② Actual impedance may be ± 7.5%.

③ Type EPT transformers 3–15 kVA are T-T connected.

Performance data is based upon 480 volt Delta primary and a 208Y/120 volt secondary for three-phase transformers; 240 x 480 volt primary and a 120/240 volt secondary for single-phase transformers. All data is subject to future revision. Refer to Eaton for 5 kV class information. All data is subject to future revision.

Typical Data for DOE 2016 Energy-Efficient Low-Voltage Dry-Type Distribution Transformers, Aluminum Wound ①

Type DS-3 150°C Rise DOE 2016 Single-Phase

			Losses in Watts		Efficiency (T. Rise +20° C)				% Regulation		% Impedance					
kVA	Frame	Weight	No Load	Total at Rise +20° C	1/4 Load	1/2 Load	3/4 Load	Full Load	100% P.F.	80% P.F.	% Imp.	% X	% R	Sound Level dB	DOE 2016 Efficiency	Practical Inrush
15	842A	200	54	669	97.89	97.76	96.97	95.75	4.1	4.2	4.37	1.51	4.10	45	97.70	320
25	842A	275	74	1004	98.20	98.05	97.30	96.15	3.7	3.7	3.71	1.88	3.20	45	98.00	550
37.5	843A	310	78	1328	98.60	98.34	97.65	96.59	3.3	5.6	5.86	4.82	3.33	45	98.20	930
50	843A	390	105	2005	98.48	98.16	97.37	96.20	3.8	5.7	5.84	4.43	3.80	45	98.30	360
75	844A	650	180	2330	98.54	98.42	97.86	96.99	2.9	4.1	4.15	3.00	2.87	50	98.50	820
100	844A	690	208	3028	98.67	98.50	97.93	97.07	2.8	4.9	5.13	4.29	2.82	50	98.60	760
167	814A	1610	900	4887	98.60	98.70	98.40	98.00	1.40	6.80	9.70	9.50	1.80	55	98.70	416

Type DS-3 115°C Rise DOE 2016 Single-Phase

			Losses in Watts		Efficiency (T. Rise +20° C)				% Regulation		% Impedance					
kVA	Frame	Weight	No Load	Total at Rise +20° C	1/4 Load	1/2 Load	3/4 Load	Full Load	100% P.F.	80% P.F.	% Imp.	% X	% R	Sound Level dB	DOE 2016 Efficiency	Practical Inrush
15	842A	200	54	656	97.90	97.77	96.98	95.76	4.0	4.2	4.33	1.62	4.01	45	97.70	323
25	842A	275	74	984	98.21	98.06	97.31	96.16	3.6	3.2	3.67	0.50	3.64	45	98.00	556
37.5	843A	310	78	1301	98.61	98.35	97.66	96.60	3.3	5.5	5.80	4.80	3.26	45	98.20	939
50	843A	390	105	1965	98.49	98.17	97.38	96.21	3.7	5.7	5.78	4.43	3.72	45	98.30	364
75	844A	650	180	2283	98.55	98.43	97.87	97.00	2.8	4.1	4.11	3.00	2.80	50	98.50	828

Type DS-3 80°C Rise DOE 2016 Single-Phase

			Losses in Watts		Efficiency (T. Rise +20° C)				% Regulation		% Impedance					
kVA	Frame	Weight	No Load	Total at Rise +20° C	1/4 Load	1/2 Load	3/4 Load	Full Load	100% P.F.	80% P.F.	% Imp.	% X	% R	Sound Level dB	DOE 2016 Efficiency	Practical Inrush
15	842A	275	74	344	97.85	98.26	98.05	97.65	1.8	2.2	2.23	1.31	1.80	45	97.70	550
25	843A	310	78	678	98.40	98.58	98.34	97.96	2.4	3.8	3.91	3.08	2.40	45	98.00	930
37.5	843A	390	105	1010	98.28	98.44	98.16	97.73	2.4	4.1	4.38	3.66	2.41	45	98.20	360
50	844A	650	180	930	98.25	98.58	98.42	98.12	1.5	2.6	2.77	2.32	1.50	45	98.30	820
75	844A	690	208	1588	98.44	98.69	98.50	98.19	1.8	3.5	3.85	3.38	1.84	50	98.50	760

Note

① Typical values for aluminum windings. Contact Eaton for values of copper windings. Up-to-date design data is available at www.eaton.com.

Typical Data for DOE 2016 Energy-Efficient Low-Voltage Dry-Type Distribution Transformers—Aluminum Wound

Type DT-3 150°C Rise DOE 2016

kVA	Weight	Loss in Watts: No Load	Loss in Watts: Total at Rise +20°C	Efficiency (T. Rise +20°C): 25%	Efficiency (T. Rise +20°C): 50%	Efficiency (T. Rise +20°C): 75%	Full Load	% Regulation: 100% PF	% Regulation: 80% PF	% Imp. Trise +20°C	X Trise +20°C	R Trise +20°C	Sound Level dB	DOE 2016 Efficiency	Inrush Practical Max.
15	225	69	573	97.85	97.70	97.11	96.43	3.7	3.7	3.74	1.6	3.4	45	97.89	70
30	409	129	802	97.99	98.17	97.87	97.45	2.4	2.4	2.44	1.0	2.2	45	98.23	218
45	416	140	1287	98.37	98.25	97.80	97.27	3.3	3.5	3.51	2.4	2.5	45	98.40	165
75	570	210	1887	98.52	98.44	98.05	97.59	3.3	3.6	3.61	2.8	2.2	50	98.60	270
112.5	976	280	2516	98.70	98.63	98.28	97.86	3.9	4.3	4.37	3.9	2.0	50	98.74	302
150	1239	350	2983	98.77	98.74	98.44	98.08	3.1	3.4	3.46	3.0	1.8	50	98.83	516
225	1624	495	4118	98.86	98.84	98.57	98.24	3.8	4.2	4.29	4.0	1.6	55	98.94	721
300	2283	640	5236	98.98	98.92	98.65	98.33	3.9	4.3	4.45	4.2	1.5	55	99.02	731

Type DT-3 115°C Rise DOE 2016

kVA	Weight	Loss in Watts: No Load	Loss in Watts: Total at Rise +20°C	Efficiency (T. Rise +20°C): 25%	Efficiency (T. Rise +20°C): 50%	Efficiency (T. Rise +20°C): 75%	Full Load	% Regulation: 100% PF	% Regulation: 80% PF	% Imp. Trise +20°C	X Trise +20°C	R Trise +20°C	Sound Level dB	DOE 2016 Efficiency	Inrush Practical Max.
15	231	65	521	97.94	97.86	97.35	96.74	3.4	3.5	3.54	1.8	3.0	45	97.89	70
30	420	122	691	98.10	98.35	98.12	97.79	2.1	2.2	2.21	1.1	1.9	45	98.23	196
45	429	140	1217	98.40	98.32	97.91	97.42	3.5	3.8	3.81	3.0	2.4	45	98.40	146
75	605	210	1816	98.58	98.50	98.13	97.69	3.5	3.8	3.82	3.2	2.1	50	98.60	244
112.5	982	260	2436	98.73	98.66	98.32	97.91	4.0	4.4	4.53	4.1	1.9	50	98.74	265
150	1253	350	3014	98.76	98.72	98.42	98.06	3.5	3.9	3.97	3.6	1.8	50	98.83	447
225	1633	495	3757	98.90	98.91	98.68	98.39	4.7	5.1	5.3	5.1	1.4	55	98.94	610
300	2283	600	4668	98.99	98.99	98.77	98.50	3.9	4.4	4.52	4.3	1.4	55	99.02	675

Type DT-3 80°C Rise DOE 2016

kVA	Weight	Loss in Watts: No Load	Loss in Watts: Total at Rise +20°C	Efficiency (T. Rise +20°C): 25%	Efficiency (T. Rise +20°C): 50%	Efficiency (T. Rise +20°C): 75%	Full Load	% Regulation: 100% PF	% Regulation: 80% PF	% Imp. Trise +20°C	X Trise +20°C	R Trise +20°C	Sound Level dB	DOE 2016 Efficiency	Inrush Practical Max.
15	237	65	508	97.97	97.90	97.41	96.82	3.6	3.8	3.81	2.4	3.0	45	97.89	70
30	433	140	557	98.13	98.54	98.46	98.25	1.9	2.1	2.15	1.6	1.4	45	98.23	165
45	570	210	724	98.25	98.70	98.66	98.51	1.7	2.0	2.04	1.7	1.1	50	98.40	270
75	982	256	1104	98.58	98.87	98.78	98.60	2.3	2.7	2.75	2.5	1.1	50	98.60	302
112.5	1274	365	1701	98.66	98.90	98.78	98.57	2.2	2.5	2.62	2.3	1.2	50	98.74	516
150	1628	414	1781	98.74	99.03	98.98	98.85	2.4	2.8	2.9	2.8	0.9	55	98.83	721
225	2207	761	3337	98.84	98.99	98.86	98.65	2.7	3.1	3.17	3.0	1.1	55	98.94	731
300	2283	565	3642	99.00	99.12	98.99	98.80	3.8	4.3	4.51	4.4	1.0	60	99.02	694

Typical Data for DOE 2016 Energy-Efficient Low-Voltage Dry-Type Distribution Transformers—Aluminum Wound

Type KT-4 150°C Rise DOE 2016

		Loss in Watts		Efficiency (T. Rise +20°C)				% Regulation		% Imp.	X	R			Inrush
kVA	Weight	No Load	Total at Rise +20°C	25%	50%	75%	Full Load	100% PF	80% PF	Trise +20°C	Trise +20°C	Trise +20°C	Sound Level dB	DOE 2016 Efficiency	Practical Max.
15	407	91	324	97.51	98.18	98.15	97.96	1.7	1.8	1.77	0.9	1.6	45	97.89	70
30	437	122	755	98.08	98.26	97.98	97.59	2.5	2.7	2.66	1.6	2.1	45	98.23	196
45	439	140	1323	98.35	98.21	97.74	97.19	3.9	4.2	4.18	3.2	2.6	45	98.40	146
75	599	210	1971	98.53	98.40	97.98	97.49	3.7	4.0	4.05	3.3	2.3	50	98.60	244
112.5	987	365	1833	98.60	98.82	98.69	98.45	2.6	3.0	3.07	2.8	1.3	50	98.74	265
150	1637	495	-	-	-	-	-	-	-	-	-	-	55	98.83	447
225	1642	471	3944	98.88	98.87	98.61	98.30	4.8	5.3	5.43	5.2	1.5	55	98.94	610
300	2394	600	5069	98.99	98.94	98.68	98.38	4.4	4.8	4.99	4.8	1.5	55	99.02	675

Type KT-4 115°C Rise DOE 2016

		Loss in Watts		Efficiency (T. Rise +20°C)				% Regulation		% Imp.	X	R			Inrush
kVA	Weight	No Load	Total at Rise +20°C	25%	50%	75%	Full Load	100% PF	80% PF	Trise +20°C	Trise +20°C	Trise +20°C	Sound Level dB	DOE 2016 Efficiency	Practical Max.
15	402	91	294	97.48	98.24	98.27	98.13	1.6	1.7	1.7	1.0	1.4	45	97.89	136
30	415	122	695	98.12	98.35	98.12	97.78	2.2	2.4	2.38	1.4	1.9	45	98.23	196
45	619	193	784	98.18	98.60	98.53	98.34	2.0	2.3	2.34	1.9	1.3	50	98.40	244
75	984	260	1343	98.49	98.71	98.55	98.29	2.8	3.2	3.25	2.9	1.4	50	98.60	265
112.5	1236	365	1687	98.62	98.88	98.78	98.57	2.5	2.9	2.98	2.7	1.2	50	98.74	447
150	1662	495	1974	98.65	98.96	98.90	98.75	3.0	3.4	3.57	3.4	1.0	55	98.83	610
225	2353	542	3005	98.88	99.03	98.91	98.71	3.1	3.5	3.68	3.5	1.1	55	98.94	675
300	2198	582	4188	98.88	99.00	98.84	98.61	3.2	3.6	3.73	3.5	1.2	55	99.02	1027

Type KT-4 80°C Rise DOE 2016

		Loss in Watts		Efficiency (T. Rise +20°C)				% Regulation		% Imp.	X	R			Inrush
kVA	Weight	No Load	Total at Rise +20°C	25%	50%	75%	Full Load	100% PF	80% PF	Trise +20°C	Trise +20°C	Trise +20°C	Sound Level dB	DOE 2016 Efficiency	Practical Max.
15	254	65	543	97.71	97.69	97.17	96.55	3.6	3.7	3.67	1.8	3.2	45	97.89	58
30	437	140	591	98.12	98.50	98.38	98.15	2.2	2.5	2.52	2.0	1.5	45	98.23	146
45	619	180	730	98.32	98.71	98.64	98.45	2.0	2.3	2.36	2.0	1.2	50	98.40	244
75	1027	260	1159	98.49	98.80	98.70	98.51	2.7	3.1	3.18	2.9	1.2	50	98.60	265
112.5	1643	444	1213	98.50	99.00	99.06	98.99	2.1	2.5	2.64	2.5	0.7	55	98.74	610
150	1710	408	1853	98.86	99.07	98.98	98.82	2.9	3.4	3.52	3.4	1.0	55	98.83	611
225	2680	621	2405	98.78	99.09	99.07	98.96	3.0	3.5	3.67	3.6	0.8	60	98.94	757
300	—	—	—	—	—	—	—	—	—	—	—	—	—	—	—

Typical Data for DOE 2016 Energy-Efficient Low-Voltage Dry-Type Distribution Transformers—Aluminum Wound

Type KT-9 150°C Rise DOE 2016

kVA	Weight	Loss in Watts		Efficiency (T. Rise +20°C)				% Regulation		% Imp.	X	R			Inrush
		No Load	Total at Rise +20°C	25%	50%	75%	Full Load	100% PF	80% PF	Trise +20°C	Trise +20°C	Trise +20°C	Sound Level dB	DOE 2016 Efficiency	Practical Max.
15	406	91	315	97.52	98.20	98.19	98.01	1.6	1.7	1.68	0.8	1.5	45	97.89	70
30	416	122	770	98.04	98.22	97.94	97.54	2.4	2.5	2.47	1.2	2.2	45	98.23	196
45	594	193	817	98.18	98.57	98.48	98.27	2.1	2.4	2.4	2.0	1.4	50	98.40	244
75	1012	256	1323	98.49	98.72	98.56	98.31	3.0	3.4	3.5	3.2	1.4	50	98.60	265
112.5	1297	365	1907	98.59	98.80	98.65	98.39	2.7	3.1	3.18	2.9	1.4	50	98.74	447
150	1652	385	1840	98.87	99.07	98.98	98.82	3.0	3.4	3.61	3.5	1.0	50	98.83	—
225	2379	617	3346	98.82	98.96	98.81	98.59	3.1	3.6	3.7	3.5	1.2	55	98.94	618.48
300	—	—	—	—	—	—	—	—	—	—	—	—	—	—	—

Type KT-9 115°C Rise DOE 2016

kVA	Weight	Loss in Watts		Efficiency (T. Rise +20°C)				% Regulation		% Imp.	X	R			Inrush
		No Load	Total at Rise +20°C	25%	50%	75%	Full Load	100% PF	80% PF	Trise +20°C	Trise +20°C	Trise +20°C	Sound Level dB	DOE 2016 Efficiency	Practical Max.
15	412	91	290	97.58	98.29	98.32	98.17	1.5	1.6	1.61	0.9	1.3	45	97.89	—
30	437	140	636	98.04	98.40	98.26	97.99	2.6	2.9	2.98	2.5	1.7	45	98.23	196
45	619	193	772	98.20	98.62	98.55	98.36	2.0	2.3	2.29	1.9	1.3	50	98.40	244
75	977	260	1226	98.50	98.77	98.66	98.44	2.6	3.0	3.11	2.8	1.3	50	98.60	265
112.5	1760	495	1369	98.41	98.93	98.97	98.89	2.1	2.6	2.7	2.6	0.8	55	98.74	—
150	1800	489	1911	98.80	99.05	98.98	98.82	3.0	3.5	3.64	3.5	0.9	55	98.83	610
225	—	—	—	—	—	—	—	—	—	—	—	—	—	—	—
300	—	—	—	—	—	—	—	—	—	—	—	—	—	—	—

Type KT-9 80°C Rise DOE 2016

kVA	Weight	Loss in Watts		Efficiency (T. Rise +20°C)				% Regulation		% Imp.	X	R			Inrush
		No Load	Total at Rise +20°C	25%	50%	75%	Full Load	100% PF	80% PF	Trise +20°C	Trise +20°C	Trise +20°C	Sound Level dB	DOE 2016 Efficiency	Practical Max.
15	—	—	—	—	—	—	—	—	—	—	—	—	—	—	—
30	435	140	617	98.14	98.48	98.33	98.07	2.4	2.7	2.7	2.2	1.6	45	98.23	—
45	927	221	554	97.89	98.67	98.81	98.78	1.4	1.7	1.82	1.7	0.7	50	98.40	244
75	1098	288	883	98.42	98.91	98.95	98.87	1.6	1.9	2.01	1.8	0.8	50	98.60	447
112.5	—	—	—	—	—	—	—	—	—	—	—	—	—	—	—
150	2416	515	1537	98.70	99.10	99.12	99.04	1.8	2.2	2.3	2.2	0.7	55	98.83	675
225	—	—	—	—	—	—	—	—	—	—	—	—	—	—	—
300	—	—	—	—	—	—	—	—	—	—	—	—	—	—	—

Typical Data for DOE 2016 Energy-Efficient Low-Voltage Dry-Type Distribution Transformers—Aluminum Wound

Type KT-13 150°C Rise DOE 2016

		Loss in Watts		Efficiency (T. Rise +20°C)				% Regulation		% Imp.	X	R			Inrush
kVA	Weight	No Load	Total at Rise +20°C	25%	50%	75%	Full Load	100% PF	80% PF	Trise +20°C	Trise +20°C	Trise +20°C	Sound Level dB	DOE 2016 Efficiency	Practical Max.
15	406	91	315	97.52	98.20	98.19	98.01	1.6	1.7	1.68	0.8	1.5	45	97.89	70
30	416	122	770	98.04	98.22	97.94	97.54	2.4	2.5	2.47	1.2	2.2	45	98.23	196
45	594	193	817	98.18	98.57	98.48	98.27	2.1	2.4	2.4	2.0	1.4	53	98.40	244
75	1012	256	1323	98.49	98.72	98.56	98.31	3.0	3.4	3.5	3.2	1.4	53	98.60	265
112.5	1297	365	1907	98.59	98.80	98.65	98.39	2.7	3.1	3.18	2.9	1.4	53	98.74	447
150	1425	415	2050	98.72	98.96	98.86	98.68	3.1	3.5	3.64	3.5	1.1	53	98.83	610
225	2341	600	3072	98.86	99.02	98.89	98.70	3.2	3.6	3.75	3.6	1.1	58	98.94	675
300	2400	676	4090	98.91	99.03	98.89	98.68	4.1	4.6	4.78	4.6	1.1	63	99.02	526

Type KT-13 115°C Rise DOE 2016

		Loss in Watts		Efficiency (T. Rise +20°C)				% Regulation		% Imp.	X	R			Inrush
kVA	Weight	No Load	Total at Rise +20°C	25%	50%	75%	Full Load	100% PF	80% PF	Trise +20°C	Trise +20°C	Trise +20°C	Sound Level dB	DOE 2016 Efficiency	Practical Max.
15	412	91	290	97.58	98.29	98.32	98.17	1.5	1.6	1.61	0.9	1.3	45	97.89	136
30	437	140	636	98.04	98.40	98.26	97.99	2.6	2.9	2.98	2.5	1.7	48	98.23	196
45	619	193	772	98.20	98.62	98.55	98.36	2.0	2.3	2.29	1.9	1.3	53	98.40	244
75	977	260	1226	98.50	98.77	98.66	98.44	2.6	3.0	3.11	2.8	1.3	53	98.60	265
112.5	1760	495	1369	98.41	98.93	98.97	98.89	2.1	2.6	2.7	2.6	0.8	58	98.74	610
150	1800	489	1911	98.80	99.05	98.98	98.82	3.0	3.5	3.64	3.5	0.9	58	98.83	610
225	1927	570	-	-	-	-	-	-	-	-	-	-	63	98.94	-
300	2894	620	4300	98.91	99.00	98.83	98.60	4.8	5.3	5.52	5.4	1.2	63	99.02	577.55

Type KT-13 80°C Rise DOE 2016

		Loss in Watts		Efficiency (T. Rise +20°C)				% Regulation		% Imp.	X	R			Inrush
kVA	Weight	No Load	Total at Rise +20°C	25%	50%	75%	Full Load	100% PF	80% PF	Trise +20°C	Trise +20°C	Trise +20°C	Sound Level dB	DOE 2016 Efficiency	Practical Max.
15	—	—	—	—	—	—	—	—	—	—	—	—	—	—	—
30	435	140	617	98.14	98.48	98.33	98.07	2.4	2.7	2.7	2.2	1.6	48	98.23	244
45	927	221	554	97.89	98.67	98.81	98.78	1.4	1.7	1.82	1.7	0.7	53	98.40	344
75	1098	288	883	98.42	98.91	98.95	98.87	1.6	1.9	2.01	1.8	0.8	53	98.60	447
112.5	—	—	—	—	—	—	—	—	—	—	—	—	—	—	—
150	2416	515	1537	98.70	99.10	99.12	99.04	1.8	2.2	2.3	2.2	0.7	58	98.83	675
225	2816	757	2649	98.85	99.11	99.06	98.93	2.9	3.4	3.55	3.4	0.8	63	98.94	642
300	—	—	—	—	—	—	—	—	—	—	—	—	—	—	—

Typical Data for DOE 2016 Energy-Efficient Low-Voltage Dry-Type Distribution Transformers—Copper Wound

Type DS-3 150°C Rise DOE 2016 Single-Phase

			Losses in Watts		Efficiency (T. Rise +20° C)				% Regulation		% Impedance					
kVA	Frame	Weight	No Load	Total at Rise +20° C	1/4 Load	1/2 Load	3/4 Load	Full Load	100% P.F.	80% P.F.	% Imp.	% X	% R	Sound Level dB	DOE 2016 Efficiency	Practical Inrush
15	842A	216	54	480	98.06	98.16	97.68	96.92	2.7	3.2	3.26	1.60	2.84	45	97.70	335
25	842A	295	74	961	98.32	98.32	97.80	96.98	2.6	2.9	2.98	1.22	2.72	45	98.00	267
37.5	843A	440	78	1254	98.60	98.36	97.71	96.77	3.1	5.5	5.83	4.91	3.14	45	98.20	588
50	843A	450	105	1544	98.60	98.41	97.78	96.83	2.8	4.1	4.13	2.96	2.88	45	98.30	472
75	844A	890	180	2129	98.58	98.52	98.02	97.25	2.1	3.5	3.47	2.30	2.60	50	98.50	919
100	844A	950	208	2843	98.78	98.73	98.33	97.71	1.8	4.2	4.32	3.42	2.64	50	98.60	828
167	814A	1665	570	3094	98.70	98.80	98.60	98.30	1.50	6.30	9.00	8.80	1.50	55	98.70	955

Type DS-3 115°C Rise DOE 2016 Single-Phase

			Losses in Watts		Efficiency (T. Rise +20° C)				% Regulation		% Impedance					
kVA	Frame	Weight	No Load	Total at Rise +20° C	1/4 Load	1/2 Load	3/4 Load	Full Load	100% P.F.	80% P.F.	% Imp.	% X	% R	Sound Level dB	DOE 2016 Efficiency	Practical Inrush
15	842A	218	54	470	98.07	98.17	97.69	96.93	2.8	3.2	3.23	1.65	2.78	45	97.70	247
25	842A	300	74	942	98.33	98.33	97.81	96.99	3.5	2.7	2.95	0.64	2.88	45	98.00	1162
37.5	843A	450	78	1229	98.61	98.37	97.72	96.78	3.1	5.4	5.77	4.89	3.07	45	98.20	338
50	843A	464	105	1513	98.61	98.42	97.79	96.84	2.8	4.1	4.09	2.96	2.82	45	98.30	780
75	844A	900	180	2086	98.59	98.53	98.03	97.26	2.5	3.4	3.44	2.31	2.54	50	98.50	1041

Type DS-3 80°C Rise DOE 2016 Single-Phase

			Losses in Watts		Efficiency (T. Rise +20° C)				% Regulation		% Impedance					
kVA	Frame	Weight	No Load	Total at Rise +20° C	1/4 Load	1/2 Load	3/4 Load	Full Load	100% P.F.	80% P.F.	% Imp.	% X	% R	Sound Level dB	DOE 2016 Efficiency	Practical Inrush
15	842A	295	74	284	97.92	98.43	98.32	98.04	1.4	1.8	1.79	1.11	1.40	45	97.70	588
25	843A	440	78	373	98.40	98.59	98.36	98.00	1.2	3.2	3.89	3.70	1.18	45	98.00	472
37.5	843A	450	105	456	98.35	98.61	98.41	98.07	0.9	2.5	3.10	2.95	0.94	45	98.20	919
50	844A	890	180	755	98.28	98.65	98.52	98.26	1.2	2.1	2.31	2.01	1.15	45	98.30	828
75	844A	950	208	856	98.51	98.84	98.73	98.52	0.9	2.6	3.24	3.12	0.86	50	98.50	955

Typical Data for DOE 2016 Energy-Efficient Low-Voltage Dry-Type Distribution Transformers—Copper Wound

Type DT-3 150°C Rise DOE 2016

		Loss in Watts		Efficiency (T. Rise +20°C)				% Regulation		% Imp.	X	R			Inrush
kVA	Weight	No Load	Total at Rise +20°C	25%	50%	75%	Full Load	100% PF	80% PF	Trise +20°C	Trise +20°C	Trise +20°C	Sound Level dB	DOE 2016 Efficiency	Practical Max.
15	250	75	467	97.83	97.95	97.58	97.08	2.9	3.0	3.00	1.5	2.6	45	97.89	109
30	415	119	823	98.03	98.15	97.81	97.37	2.5	2.5	2.56	1.0	2.3	45	98.23	262
45	478	123	1288	98.44	98.27	97.80	97.26	3.2	3.4	3.44	2.3	2.6	45	98.40	181
75	676	210	1937	98.52	98.41	98.01	97.53	3.0	3.2	3.21	2.2	2.3	50	98.60	399
112.5	1263	270	2474	98.73	98.65	98.31	97.89	3.3	3.6	3.63	3.1	2.0	50	98.74	351
150	1410	360	2861	98.78	98.77	98.50	98.16	3.0	3.3	3.39	3.0	1.7	50	98.83	597
225	1883	420	4815	98.88	98.72	98.35	97.93	4.6	5.0	5.14	4.8	2.0	55	98.94	540
300	2485	515	5475	98.92	98.85	98.56	98.21	3.7	4.1	4.21	3.9	1.7	55	99.02	858

Type DT-3 115°C Rise DOE 2016

		Loss in Watts		Efficiency (T. Rise +20°C)				% Regulation		% Imp.	X	R			Inrush
kVA	Weight	No Load	Total at Rise +20°C	25%	50%	75%	Full Load	100% PF	80% PF	Trise +20°C	Trise +20°C	Trise +20°C	Sound Level dB	DOE 2016 Efficiency	Practical Max.
15	241	75	445	97.89	98.03	97.69	97.23	2.7	2.8	2.77	1.3	2.5	45	97.89	109
30	433	116	747	98.09	98.27	97.99	97.60	2.2	2.3	2.3	0.9	2.1	45	98.23	235
45	471	123	1208	98.48	98.35	97.92	97.42	3.2	3.5	3.46	2.5	2.4	45	98.40	170
75	665	214	1758	98.53	98.51	98.17	97.75	2.7	3.0	2.97	2.1	2.1	50	98.60	378
112.5	1271	270	2336	98.72	98.69	98.38	98.00	3.5	3.9	4	3.6	1.8	50	98.74	307
150	1422	360	2156	98.90	99.00	98.84	98.62	3.0	3.4	3.56	3.4	1.2	50	98.83	546
225	2082	420	4567	98.90	98.77	98.43	98.03	4.8	5.3	5.41	5.1	1.8	55	98.94	455
300	2568	570	5416	98.93	98.87	98.58	98.25	4.2	4.7	4.8	4.5	1.6	55	99.02	707

Type DT-3 80°C Rise DOE 2016

		Loss in Watts		Efficiency (T. Rise +20°C)				% Regulation		% Imp.	X	R			Inrush
kVA	Weight	No Load	Total at Rise +20°C	25%	50%	75%	Full Load	100% PF	80% PF	Trise +20°C	Trise +20°C	Trise +20°C	Sound Level dB	DOE 2016 Efficiency	Practical Max.
15	239	75	439	97.89	98.05	97.72	97.26	2.8	3.0	2.96	1.7	2.4	45	97.89	92
30	466	205	645	98.26	98.58	98.46	98.22	1.9	2.1	2.06	1.4	1.5	45	98.23	181
45	667	210	773	98.30	98.68	98.61	98.42	1.7	1.9	1.95	1.5	1.3	50	98.40	399
75	1147	270	1162	98.47	98.79	98.71	98.52	2.2	2.6	2.68	2.4	1.2	50	98.60	351
112.5	1385	360	1631	98.66	98.92	98.82	98.62	2.2	2.6	2.69	2.4	1.1	50	98.74	597
150	1895	420	2287	98.74	98.91	98.76	98.54	2.9	3.4	3.48	3.2	1.2	55	98.83	540
225	2385	513	2854	98.89	99.06	98.94	98.76	2.6	3.1	3.2	3.0	1.0	55	98.94	707
300	—	—	—	—	—	—	—	—	—	—	—	—	—	—	—

Typical Data for DOE 2016 Energy-Efficient Low-Voltage Dry-Type Distribution Transformers—Copper Wound

Type KT-4 150°C Rise DOE 2016

kVA	Weight	Loss in Watts No Load	Loss in Watts Total at Rise +20°C	Efficiency (T. Rise +20°C) 25%	50%	75%	Full Load	% Regulation 100% PF	80% PF	% Imp. Trise +20°C	X Trise +20°C	R Trise +20°C	Sound Level dB	DOE 2016 Efficiency	Inrush Practical Max.
15	418	86.17	351	97.62	98.15	98.05	97.79	1.9	1.9	1.9	0.7	1.8	45	97.89	154
30	458	123	644	98.13	98.42	98.24	97.94	2.2	2.4	2.38	1.6	1.7	45	98.23	170
45	480	123	757	98.17	98.56	98.47	98.25	3.0	3.4	3.52	3.2	1.4	45	98.40	168
75	1274	270	1063	98.58	98.90	98.83	98.67	1.7	2.0	2.05	1.8	1.1	50	98.60	307
112.5	1818	360	1667	98.63	98.88	98.78	98.58	2.1	2.5	2.56	2.3	1.2	50	98.74	546
150	2105	439	2394	98.71	98.87	98.71	98.48	3.4	3.8	3.98	3.8	1.3	55	98.83	455
225	2674	570	3032	98.89	99.04	98.91	98.71	3.2	3.6	3.76	3.6	1.1	55	98.94	707
300	2737	570	5057	98.99	98.94	98.68	98.37	4.6	5.0	5.2	5.0	1.5	55	99.02	720

Type KT-4 115°C Rise DOE 2016

kVA	Weight	Loss in Watts No Load	Loss in Watts Total at Rise +20°C	Efficiency (T. Rise +20°C) 25%	50%	75%	Full Load	% Regulation 100% PF	80% PF	% Imp. Trise +20°C	X Trise +20°C	R Trise +20°C	Sound Level dB	DOE 2016 Efficiency	Inrush Practical Max.
15	414	86	338	97.50	98.12	98.06	97.83	1.9	2.0	1.98	1.1	1.7	45	97.89	154.39
30	417	123	642	98.15	98.44	98.25	97.95	2.1	2.3	2.31	1.5	1.7	45	98.23	170
45	684	190	777	98.21	98.62	98.55	98.35	1.5	1.7	1.7	1.1	1.3	50	98.40	378
75	1083	270	1147	98.62	98.88	98.77	98.58	1.9	2.2	2.24	1.9	1.2	50	98.60	307
112.5	1394	350	1673	98.60	98.87	98.77	98.57	2.3	2.7	2.74	2.5	1.2	50	98.74	546
150	2103	420	2260	98.74	98.91	98.77	98.55	3.5	3.9	4.1	3.9	1.2	55	98.83	455
225	2150	570	2966	98.88	99.04	98.92	98.73	3.0	3.4	3.6	3.4	1.1	55	98.94	707
300	—	—	—	—	—	—	—	—	—	—	—	—	—	—	—

Type KT-4 80°C Rise DOE 2016

kVA	Weight	Loss in Watts No Load	Loss in Watts Total at Rise +20°C	Efficiency (T. Rise +20°C) 25%	50%	75%	Full Load	% Regulation 100% PF	80% PF	% Imp. Trise +20°C	X Trise +20°C	R Trise +20°C	Sound Level dB	DOE 2016 Efficiency	Inrush Practical Max.
15	—	—	—	—	—	—	—	—	—	—	—	—	—	—	—
30	482	110	556	98.24	98.57	98.44	98.19	1.9	2.1	2.12	1.5	1.5	45	98.23	170
45	669	195	704	98.21	98.69	98.66	98.51	1.4	1.6	1.57	1.1	1.1	50	98.40	378
75	1210	243	1124	98.49	98.81	98.72	98.54	2.4	2.7	2.83	2.6	1.2	50	98.60	307
112.5	1287	360	1653	98.65	98.91	98.80	98.60	2.3	2.7	2.76	2.5	1.1	50	98.74	546
150	2138	420	1610	98.85	99.13	99.09	98.98	2.8	3.3	3.47	3.4	0.8	55	98.83	455
225	2727	584	2996	98.88	99.04	98.92	98.73	3.1	3.5	3.7	3.5	1.1	55	98.94	693.89
300	—	—	—	—	—	—	—	—	—	—	—	—	—	—	—

Typical Data for DOE 2016 Energy-Efficient Low-Voltage Dry-Type Distribution Transformers—Copper Wound

Type KT-9 150°C Rise DOE 2016

		Loss in Watts		Efficiency (T. Rise +20°C)				% Regulation		% Imp.	X	R			Inrush
kVA	Weight	No Load	Total at Rise +20°C	25%	50%	75%	Full Load	100% PF	80% PF	Trise +20°C	Trise +20°C	Trise +20°C	Sound Level dB	DOE 2016 Efficiency	Practical Max.
15	430	116	306	97.53	98.29	98.34	98.21	1.4	1.5	1.51	0.8	1.3	45	97.89	—
30	505	118	667	98.19	98.42	98.20	97.87	2.3	2.5	2.48	1.7	1.8	45	98.23	—
45	699	190	837	98.12	98.52	98.43	98.21	1.8	2.0	1.96	1.3	1.4	50	98.40	—
75	1103	245	1284	98.51	98.74	98.59	98.35	2.5	2.8	2.88	2.5	1.4	50	98.60	—
112.5	1424	380	1566	98.68	98.96	98.88	98.70	1.9	2.2	2.28	2.0	1.1	50	98.74	546
150	2132	418	2337	98.80	98.93	98.76	98.52	3.1	3.5	3.65	3.4	1.3	55	98.83	455
225	2628	561	3130	98.83	98.99	98.86	98.65	3.1	3.5	3.64	3.5	1.1	55	98.94	—
300	—	—	—	—	—	—	—	—	—	—	—	—	—	—	—

Type KT-9 115°C Rise DOE 2016

		Loss in Watts		Efficiency (T. Rise +20°C)				% Regulation		% Imp.	X	R			Inrush
kVA	Weight	No Load	Total at Rise +20°C	25%	50%	75%	Full Load	100% PF	80% PF	Trise +20°C	Trise +20°C	Trise +20°C	Sound Level dB	DOE 2016 Efficiency	Practical Max.
15	398	116	—	—	—	—	—	—	—	—	—	—	45	97.89	—
30	478	123	612	98.28	98.54	98.36	98.07	1.9	2.1	2.1	1.3	1.6	45	98.23	170
45	658	190	773	98.17	98.61	98.54	98.35	1.6	1.8	1.82	1.3	1.3	50	98.40	378
75	1115	250	1245	98.48	98.74	98.62	98.40	2.4	2.7	2.8	2.5	1.3	50	98.60	307
112.5	2150	337	1589	98.64	98.91	98.82	98.63	3.1	3.5	3.65	3.5	1.1	55	98.74	—
150	2200	418	2488	98.72	98.85	98.67	98.41	3.4	3.8	3.9	3.6	1.4	55	98.83	455
225	3043	695	2226	98.78	99.14	99.15	99.07	2.9	3.4	3.56	3.5	0.7	55	98.94	—
300	—	—	—	—	—	—	—	—	—	—	—	—	—	—	—

Type KT-9 80°C Rise DOE 2016

		Loss in Watts		Efficiency (T. Rise +20°C)				% Regulation		% Imp.	X	R			Inrush
kVA	Weight	No Load	Total at Rise +20°C	25%	50%	75%	Full Load	100% PF	80% PF	Trise +20°C	Trise +20°C	Trise +20°C	Sound Level dB	DOE 2016 Efficiency	Practical Max.
15	434	116	263	97.66	98.46	98.57	98.51	1.1	1.2	1.17	0.6	1.0	45	97.89	—
30	507	110	546	98.24	98.58	98.46	98.22	1.9	2.1	2.1	1.5	1.5	45	98.23	170
45	703	146	850	98.43	98.63	98.45	98.17	2.2	2.4	2.45	1.9	1.6	50	98.40	—
75	1112	290	1004	98.46	98.87	98.86	98.73	2.2	2.6	2.68	2.5	1.0	50	98.60	307
112.5	1927	380	—	—	—	—	—	—	—	—	—	—	50	98.74	—
150	—	—	—	—	—	—	—	—	—	—	—	—	—	—	—
225	3345	695	2031	98.86	99.20	99.22	99.16	2.8	3.3	3.5	3.4	0.6	—	98.94	—
300	—	—	—	—	—	—	—	—	—	—	—	—	—	—	—

Typical Data for DOE 2016 Energy-Efficient Low-Voltage Dry-Type Distribution Transformers—Copper Wound

Type KT-13 150°C Rise DOE 2016

		Loss in Watts		Efficiency (T. Rise +20°C)				% Regulation		% Imp.	X	R			Inrush
kVA	Weight	No Load	Total at Rise +20°C	25%	50%	75%	Full Load	100% PF	80% PF	Trise +20°C	Trise +20°C	Trise +20°C	Sound Level dB	DOE 2016 Efficiency	Practical Max.
15	430	116	306	97.53	98.29	98.34	98.21	1.4	1.5	1.51	0.8	1.3	45	97.89	235
30	480	118	652	98.19	98.44	98.23	97.91	2.3	2.5	2.49	1.7	1.8	48	98.23	170
45	658	190	821	98.17	98.56	98.47	98.25	1.7	1.8	1.83	1.2	1.4	53	98.40	378
75	1115	245	1280	98.58	98.78	98.62	98.37	2.4	2.7	2.8	2.4	1.4	53	98.60	307
112.5	1424	380	1566	98.68	98.96	98.88	98.70	1.9	2.2	2.28	2.0	1.1	53	98.74	546
150	2132	418	2337	98.80	98.93	98.76	98.52	3.1	3.5	3.65	3.4	1.3	58	98.83	455
225	2628	561	3130	98.83	98.99	98.86	98.65	3.1	3.5	3.64	3.5	1.1	58	98.94	707
300	—	658	—	—	—	—	—	—	—	—	—	—	—	99.02	—

Type KT-13 115°C Rise DOE 2016

		Loss in Watts		Efficiency (T. Rise +20°C)				% Regulation		% Imp.	X	R			Inrush
kVA	Weight	No Load	Total at Rise +20°C	25%	50%	75%	Full Load	100% PF	80% PF	Trise +20°C	Trise +20°C	Trise +20°C	Sound Level dB	DOE 2016 Efficiency	Practical Max.
15	398	116	289	97.65	98.39	98.45	98.35	1.4	1.5	1.51	1.0	1.2	45	97.89	235
30	478	123	612	98.28	98.54	98.36	98.07	1.9	2.1	2.1	1.3	1.6	48	98.23	170
45	658	190	773	98.17	98.61	98.54	98.35	1.6	1.8	1.82	1.3	1.3	53	98.40	378
75	1115	250	1245	98.48	98.74	98.62	98.40	2.4	2.7	2.8	2.5	1.3	53	98.60	307
112.5	2150	337	1589	98.64	98.91	98.82	98.63	3.1	3.5	3.65	3.5	1.1	58	98.74	315
150	2013	418	2488	98.72	98.85	98.67	98.41	3.4	3.8	3.9	3.6	1.4	58	98.83	455
225	3043	695	2226	98.78	99.14	99.15	99.07	2.9	3.4	3.56	3.5	0.7	58	98.94	—
300	—	—	—	—	—	—	—	—	—	—	—	—	—	—	—

Type KT-13 80°C Rise DOE 2016

		Loss in Watts		Efficiency (T. Rise +20°C)				% Regulation		% Imp.	X	R			Inrush
kVA	Weight	No Load	Total at Rise +20°C	25%	50%	75%	Full Load	100% PF	80% PF	Trise +20°C	Trise +20°C	Trise +20°C	Sound Level dB	DOE 2016 Efficiency	Practical Max.
15	434	116	263	97.66	98.46	98.57	98.51	1.1	1.2	1.17	0.6	1.0	45	97.89	235
30	507	110	546	98.24	98.58	98.46	98.22	1.9	2.1	2.1	1.5	1.5	48	98.23	170
45	703	146	850	98.43	98.63	98.45	98.17	2.2	2.4	2.45	1.9	1.6	53	98.40	195
75	1112	290	1004	98.46	98.87	98.86	98.73	2.2	2.6	2.68	2.5	1.0	53	98.60	307
112.5	1927	380	—	—	—	—	—	—	—	—	—	—	53	98.74	315
150	—	—	—	—	—	—	—	—	—	—	—	—	—	—	—
225	3345	695	2031	98.86	99.20	99.22	99.16	2.8	3.3	3.5	3.4	0.6	—	98.94	—
300	—	—	—	—	—	—	—	—	—	—	—	—	—	—	—

Typical Data for General-Purpose Dry-Type Distribution Transformers, Aluminum Wound

Type DS-3 150°C Rise NEMA TP-1

		Losses in Watts		Efficiency (Trise +20°)				% Regulation		% Imp.	X	R			
kVA	Weight	No Load	Total at Rise +20	25%	50%	75%	Full Load	100% PF	80% PF	Trise +20	Trise +20	Trise +20	Sound Level dB	TP1 Efficiency	Practical Max.
15	196	80	518	97.5	97.7	97.3	96.7	2.0	2.5	3.46	1.9	2.9	45	97.70	303
25	261	110	736	98.2	98.2	97.8	97.3	1.6	2.1	2.97	1.6	2.5	45	98.00	492
38	304	132	1141	98.3	98.1	97.7	97.1	1.8	3.8	4.85	4.0	2.7	45	98.20	352
50	396	145	1699	98.4	98.1	97.5	96.8	2.1	4.2	5.32	4.3	3.1	45	98.30	359
75	688	260	1622	98.4	98.6	98.3	97.9	1.5	2.7	3.46	2.9	1.8	50	98.50	1143
100	699	300	2527	98.5	98.4	98.1	97.6	1.9	4.0	5.17	4.7	2.2	50	98.60	865
167	1610	900	3987	68.7	98.7	98.4	98.0	1.4	6.8	9.70	9.5	1.8	55	98.70	416

Type DS-3 115°C Rise NEMA TP-1

		Losses in Watts		Efficiency (Trise +20°)				% Regulation		% Imp.	X	R			
kVA	Weight	No Load	Total at Rise +20	25%	50%	75%	Full Load	100% PF	80% PF	Trise +20	Trise +20	Trise +20	Sound Level dB	TP1 Efficiency	Practical Max.
15	246	80	519	97.8	97.8	97.3	96.8	2.1	3.1	3.9	2.6	2.9	45	97.70	244
25	373	300	766	97.7	98.1	98.0	97.7	1.4	2.8	3.3	2.8	1.9	45	98.00	367
37.5	380	125	1182	98.2	98.4	98.1	97.8	2.0	3.1	4.1	2.9	2.8	45	98.20	205
50	590	300	417	98.4	98.3	97.9	97.4	1.8	4.1	5.2	5.2	0.2	45	98.30	511
75	689	170	2356	98.5	98.2	97.6	97.0	2.7	5.6	6.9	6.3	2.9	50	98.50	572

Type DS-3 80°C Rise NEMA TP-1

		Losses in Watts		Efficiency (Trise +20°)				% Regulation		% Imp.	X	R			
kVA	Weight	No Load	Total at Rise +20	25%	50%	75%	Full Load	100% PF	80% PF	Trise +20	Trise +20	Trise +20	Sound Level dB	TP1 Efficiency	Practical Max.
15	360	115	269	97.4	98.3	98.4	98.4	0.8	1.7	2.0	1.8	1.0	45	97.70	460
25	370	120	580	97.8	98.2	98.0	97.8	1.5	3.2	3.9	3.4	1.8	45	98.00	348
37.5	565	150	834	98.1	98.4	98.1	97.8	1.5	3.3	4.1	3.6	1.8	45	98.20	490
50	680	175	1014	98.4	98.5	98.4	98.1	1.5	3.4	4.2	3.9	1.7	45	98.30	577
75	900	260	1387	98.3	98.6	98.5	98.2	1.4	3.5	4.3	4.0	1.5	50	98.50	807

Type DT-3 150°C Rise NEMA TP-1

		Losses in Watts		Efficiency (Trise +20°)				% Regulation		% Imp.	X	R			
kVA	Weight	No Load	Total at Rise +20	25%	50%	75%	Full Load	100% PF	80% PF	Trise +20	Trise +20	Trise +20	Sound Level dB	TP1 Efficiency	Practical Max.
15	204	95	778	96.6	96.7	96.0	95.1	4.8	4.0	4.8	1.4	4.6	45	97.00	127
30	291	165	1207	97.2	97.3	96.9	96.2	3.7	5.6	4.6	3.0	3.5	45	97.50	159
37.5	381	210	1428	97.5	97.5	97.0	96.4	3.5	5.5	4.5	3.1	3.2	45	97.70	161
45	351	210	1911	97.5	97.4	96.7	96.0	3.8	6.3	5.1	3.4	3.8	45	97.70	188
50	531	270	1316	97.7	98.1	97.9	97.5	2.2	4.0	3.2	2.4	2.1	45	98.00	333
75	553	300	2917	97.9	97.7	97.0	96.3	3.6	6.6	5.3	4.0	3.5	50	98.00	187
112.5	793	400	3693	98.0	98.0	97.5	96.9	3.2	7.5	6.0	5.2	2.9	50	98.20	350
150	913	490	4923	98.2	98.0	97.5	96.9	3.2	6.5	5.3	4.4	3.0	50	98.30	506
225	1343	650	6476	98.4	98.2	97.8	97.2	2.8	6.3	5.1	4.4	2.6	55	98.50	734
300	1597	750	8239	98.5	98.3	97.9	97.3	2.9	8.9	7.6	7.2	2.5	55	98.60	699
500	2590	1400	9782	98.6	98.7	98.5	98.1	1.9	8.2	7.2	7.0	1.7	60	98.70	1256
750	3340	1800	12,692	98.8	98.9	98.7	98.4	1.8	8.9	8.0	7.9	1.5	64	98.80	1507

Typical Data for General-Purpose Dry-Type Distribution Transformers, Aluminum Wound

Type DT-3 115°C Rise NEMA TP-1

kVA	Weight	Losses in Watts		Efficiency (Trise +20°)				% Regulation		% Imp. Trise +20	X Trise +20	R Trise +20	Sound Level dB	TP1 Efficiency	Practical Max.
		No Load	Total at Rise +20	25%	50%	75%	Full Load	100% PF	80% PF						
15	202	100	743	96.7	96.8	96.2	95.4	4.4	3.9	4.4	1.2	4.3	45	97.00	127
30	311	165	1492	97.3	97.1	96.3	95.5	4.5	4.8	4.8	1.8	4.4	45	97.50	137
45	418	220	1458	97.8	97.9	97.5	97.0	2.8	5.4	4.6	3.7	2.8	45	97.70	183
50	556	270	1211	97.6	98.1	98.0	97.7	1.9	3.7	3.2	2.6	1.9	45	98.00	297
75	581	300	2415	97.9	97.9	97.5	96.9	3.0	6.7	5.9	5.1	2.8	50	98.00	252
112.5	829	440	3209	98.0	98.1	97.8	97.3	2.6	3.6	3.1	1.9	2.5	50	98.20	433
150	996	530	3781	98.1	98.3	97.9	97.5	2.4	5.8	5.2	4.7	2.2	50	98.30	511
225	1569	720	5205	98.4	98.4	98.1	97.8	2.2	6.8	6.2	5.8	2.0	55	98.50	631
300	1908	830	6926	98.5	98.5	98.2	97.8	2.3	6.0	5.4	4.9	2.0	55	98.60	872
500	3117	1650	6968	98.5	98.9	98.8	98.7	1.2	6.6	6.6	6.5	1.1	60	98.70	1310
750	4884	2000	9335	98.9	99.1	99.0	98.8	1.3	8.7	9.0	8.9	1.0	64	98.80	1486

Type DT-3 80°C Rise NEMA TP-1

kVA	Weight	Losses in Watts		Efficiency (Trise +20°)				% Regulation		% Imp. Trise +20	X Trise +20	R Trise +20	Sound Level dB	TP1 Efficiency	Practical Max.
		No Load	Total at Rise +20	25%	50%	75%	Full Load	100% PF	80% PF						
15	276	165	551	96.7	97.4	97.2	96.8	3.4	3.9	3.5	2.3	2.6	45	97.00	119
30	350	180	904	97.3	97.8	97.6	97.2	2.5	3.9	3.4	2.5	2.4	45	97.50	112
45	540	290	1027	97.7	98.2	98.2	97.9	1.7	3.5	3.3	2.9	1.6	45	97.70	317
75	810	360	1782	97.8	98.2	98.0	97.7	0.3	3.5	4.3	3.9	1.9	50	98.00	355
112.5	944	470	2521	98.2	98.4	98.2	97.9	1.9	4.4	4.1	3.7	1.8	50	98.20	518
150	1438	650	2760	98.2	98.6	98.5	98.3	1.5	4.8	4.7	4.5	1.4	50	98.30	555
225	1746	830	4047	98.3	98.6	98.5	98.3	1.6	5.5	5.6	5.4	1.4	55	98.50	667
300	2400	1100	5338	98.6	99.0	99.0	98.9	1.6	5.9	6.1	5.9	1.4	55	98.60	885
500	3418	1800	5858	98.6	99.0	99.0	98.9	0.9	4.9	5.4	5.3	0.8	60	98.70	1487

Type KT-4 150°C Rise NEMA TP-1

kVA	Weight	Losses in Watts		Efficiency (Trise +20°)				% Regulation		% Imp. Trise +20	X Trise +20	R Trise +20	Sound Level dB	TP1 Efficiency	Practical Max.
		No Load	Total at Rise +20	25%	50%	75%	Full Load	100% PF	80% PF						
15	206	100	883	96.7	96.5	95.6	94.6	5.5	5.2	5.5	1.8	5.2	45	97.00	125
30	311	165	1263	97.2	97.3	96.7	96.0	3.9	7.4	6.0	4.8	3.7	45	97.50	151
45	400	220	1554	97.7	97.7	97.3	96.7	3.2	5.9	4.8	3.8	3.0	45	97.70	236
75	547	300	2622	97.9	97.8	97.2	96.6	3.3	6.7	5.3	4.4	3.1	50	98.00	331
112.5	800	440	3525	98.0	98.0	97.6	97.0	3.0	7.4	6.0	5.3	2.7	50	98.20	360
150	1010	530	4055	98.1	98.2	97.8	97.4	2.6	6.6	5.4	4.8	2.3	50	98.30	524
225	1680	700	5879	98.3	98.3	97.9	97.5	2.6	7.6	6.3	5.9	2.3	55	98.50	647
300	2122	1100	5895	98.4	98.6	98.4	98.1	1.9	6.8	5.9	5.7	1.6	55	98.60	954
500	3201	1800	7054	98.5	98.9	98.8	98.7	1.3	5.9	5.4	5.2	1.1	60	98.70	1529

Typical Data for General-Purpose Dry-Type Distribution Transformers, Aluminum Wound

Type KT-4 115°C Rise NEMA TP-1

		Losses in Watts		Efficiency (Trise +20°)				% Regulation		% Imp.	X	R			
kVA	Weight	No Load	Total at Rise +20	25%	50%	75%	Full Load	100% PF	80% PF	Trise +20	Trise +20	Trise +20	Sound Level dB	TP1 Efficiency	Practical Max.
15	307	135	394	96.3	97.5	97.6	97.5	1.8	2.7	2.2	1.4	1.7	45	97.00	163
30	313	165	1344	97.4	97.3	96.6	95.9	4.1	5.1	4.6	2.4	3.9	45	97.50	194
45	400	220	1463	97.8	97.9	97.5	97.0	3.0	6.1	5.2	4.4	2.8	45	97.70	197
75	587	285	2355	97.9	97.9	97.5	97.0	2.9	6.7	5.9	5.2	2.8	50	98.00	274
112.5	947	470	2910	97.9	98.1	97.9	97.5	2.4	5.0	4.3	3.7	2.2	50	98.20	482
150	1243	560	4119	98.1	98.2	97.8	97.4	2.5	6.6	5.7	5.2	2.4	50	98.30	489
225	1680	700	5413	98.3	98.3	98.1	97.7	2.3	7.5	7.0	6.7	2.1	55	98.50	573
300	2480	1100	5735	98.4	98.7	98.5	98.2	1.8	6.7	6.3	6.1	1.5	55	98.60	849

Type KT-4 80°C Rise NEMA TP-1

		Losses in Watts		Efficiency (Trise +20°)				% Regulation		% Imp.	X	R			
kVA	Weight	No Load	Total at Rise +20	25%	50%	75%	Full Load	100% PF	80% PF	Trise +20	Trise +20	Trise +20	Sound Level dB	TP1 Efficiency	Practical Max.
15	378	165	416	96.4	97.6	97.7	97.6	1.7	2.9	2.5	1.9	1.7	45	97.00	160
30	365	188	877	97.2	97.7	97.6	97.2	2.4	3.9	3.5	2.6	2.3	45	97.50	194
45	550	285	1055	97.4	98.1	98.0	97.8	1.8	3.7	3.4	2.9	1.7	45	97.70	236
75	774	360	1784	97.8	98.2	98.0	97.7	2.0	4.7	4.5	4.0	1.9	50	98.00	328
112.5	1380	550	1872	97.9	98.5	98.5	98.4	1.3	4.2	4.2	4.1	1.2	50	98.20	525
150	1604	700	2728	98.0	98.5	98.5	98.3	1.4	4.4	4.5	4.3	1.4	50	98.30	626
225	2336	850	3728	98.4	98.7	98.6	98.4	1.4	5.0	5.2	5.1	1.3	55	98.50	882
300	2689	1100	4589	98.4	98.8	98.7	98.5	1.4	5.5	5.8	5.6	1.2	55	98.60	870

Type KT-13 150°C Rise NEMA TP-1

		Losses in Watts		Efficiency (Trise +20°)				% Regulation		% Imp.	X	R			
kVA	Weight	No Load	Total at Rise +20	25%	50%	75%	Full Load	100% PF	80% PF	Trise +20	Trise +20	Trise +20	Sound Level dB	TP1 Efficiency	Practical Max.
15	271	165	604	96.7	97.3	97.0	96.5	3.1	4.2	3.6	2.1	2.9	45	97.00	126
30	365	198	977	97.1	97.6	97.3	96.9	2.7	4.3	3.5	2.4	2.6	45	97.50	188
45	545	280	1215	97.5	98.0	97.8	97.4	2.2	4.2	3.3	2.6	2.1	45	97.70	277
75	812	360	2139	97.7	98.0	97.8	97.4	2.6	5.9	4.9	4.3	2.4	50	98.00	302
112.5	920	490	3059	98.0	98.2	97.8	97.4	2.4	5.0	4.1	3.4	2.3	50	98.20	504
150	1221	530	4297	98.1	98.1	97.7	97.2	2.7	6.5	5.3	4.6	2.5	50	98.30	597
225	1960	830	4461	98.3	98.6	98.3	98.0	1.9	6.6	6.1	5.9	1.6	55	98.50	590
300	2358	1100	5931	98.4	98.6	98.4	98.2	1.9	7.2	6.3	6.0	1.6	55	98.60	847

Typical Data for General-Purpose Dry-Type Distribution Transformers, Aluminum Wound

Type KT-13 115°C Rise NEMA TP-1

		Losses in Watts		Efficiency (Trise +20°)				% Regulation		% Imp.	X	R			
kVA	Weight	No Load	Total at Rise +20	25%	50%	75%	Full Load	100% PF	80% PF	Trise +20	Trise +20	Trise +20	Sound Level dB	TP1 Efficiency	Practical Max.
15	332	165	432	96.6	97.6	97.6	97.4	1.9	3.2	2.8	2.2	1.8	45	97.00	136
30	390	200	903	97.3	97.8	97.6	97.2	2.5	4.4	3.6	2.8	2.3	45	97.50	120
45	548	280	1187	97.5	98.1	98.0	97.7	2.2	—	3.0	2.3	2.0	45	97.70	278
75	808	360	1850	97.8	98.1	97.8	97.5	2.4	5.6	4.8	4.3	2.2	50	98.00	268
112.5	990	540	2373	97.9	98.3	98.2	98.0	1.8	4.5	4.0	3.6	1.6	50	98.20	434
150	1600	650	2372	98.1	98.5	98.4	98.1	1.3	3.4	3.0	2.8	1.1	50	98.30	644
225	2306	850	4001	98.3	98.7	98.6	98.3	1.6	4.9	5.1	4.9	1.4	55	98.50	836
300	3291	1100	4583	98.4	98.8	98.7	98.5	1.3	6.2	6.3	6.2	1.2	55	98.60	950

Type KT-13 80°C Rise NEMA TP-1

		Losses in Watts		Efficiency (Trise +20°)				% Regulation		% Imp.	X	R			
kVA	Weight	No Load	Total at Rise +20	25%	50%	75%	Full Load	100% PF	80% PF	Trise +20	Trise +20	Trise +20	Sound Level dB	TP1 Efficiency	Practical Max.
15	315	165	536	96.4	97.3	97.2	96.9	2.5	3.9	3.6	2.5	2.5	45	97.00	125
30	408	188	854	97.4	97.9	97.7	97.3	2.3	4.0	3.6	2.8	2.2	45	97.50	166
45	555	280	982	97.6	98.2	98.2	98.0	1.6	3.2	3.0	2.5	1.6	45	97.70	218
75	838	400	1289	97.8	98.4	98.5	98.4	1.3	3.0	2.9	2.6	1.2	50	98.00	541
112.5	1367	550	1905	97.9	98.5	98.5	98.4	1.3	4.2	4.4	4.2	1.2	50	98.20	390
150	1607	668	2474	98.2	98.6	98.6	98.4	1.4	4.6	4.7	4.5	1.2	50	98.30	520
225	2582	850	3471	98.3	98.7	98.7	98.5	1.3	5.1	6.3	6.2	1.2	55	98.50	719
300	3228	1100	3978	98.3	98.8	98.8	98.7	1.1	4.2	4.5	4.3	1.0	55	98.60	1085

Typical Data for General-Purpose Dry-Type Distribution Transformers, Copper Wound

Type DS-3 150°C Rise NEMA TP-1

		Losses in Watts		Efficiency (Trise +20°)				% Regulation							
kVA	Weight	No Load	Total at Rise +20	25%	50%	75%	Full Load	100% PF	80% PF	% Imp.	X	R	Sound Level dB	TP1 Efficiency	Practical Max.
15	270	80	605	97.6	97.5	96.9	96.3	3.5	4.2	4.2	2.3	3.5	45	97.70	183
25	406	115	732	97.9	98.1	97.7	97.3	—	—	3.5	2.5	2.5	45	98.00	459
37.5	453	125	1154	98.2	98.1	97.6	97.0	2.7	3.7	4.8	4.0	2.7	45	98.20	440
50	657	160	1159	98.3	98.4	98.1	97.7	2.0	3.3	3.8	3.8	2.0	45	98.30	440
75	803	175	2259	98.5	98.3	97.7	97.1	2.8	4.8	6.5	5.8	2.8	50	98.50	711
100	960	250	2504	98.6	98.4	98.0	97.5	2.3	4.3	5.5	5.0	2.3	50	98.60	926
167	1665	570	3094	98.7	98.8	98.6	98.3	1.5	6.3	9.0	8.8	1.5	50	98.70	955

Type DS-3 115°C Rise NEMA TP-1

		Losses in Watts		Efficiency (Trise +20°)				% Regulation							
kVA	Weight	No Load	Total at Rise +20	25%	50%	75%	Full Load	100% PF	80% PF	% Imp.	X	R	Sound Level dB	TP1 Efficiency	Practical Max.
15	264	80	437	97.8	98.1	97.8	97.3	2.4	2.2	3.3	2.2	2.4	45	97.70	239
25	420	110	603	97.9	98.2	98.0	97.7	2.0	2.9	3.2	2.6	2.0	45	98.00	287
37.5	450	125	1217	98.2	98.0	97.5	96.9	2.9	4.5	5.9	5.1	2.9	45	98.20	433
50	703	300	1409	98.4	98.4	98.0	97.6	2.2	3.8	4.7	4.1	2.2	—	98.30	499
75	793	175	2178	98.5	98.3	97.8	97.2	2.7	4.7	6.2	5.6	2.7	50	98.50	702

Type DS-3 80°C Rise NEMA TP-1

		Losses in Watts		Efficiency (Trise +20°)				% Regulation							
kVA	Weight	No Load	Total at Rise +20	25%	50%	75%	Full Load	100% PF	80% PF	% Imp.	X	R	Sound Level dB	TP1 Efficiency	Practical Max.
15	407	115	293	97.3	98.2	98.3	98.2	1.2	1.7	1.8	1.4	1.2	45	97.70	125
25	430	300	679	97.9	98.4	98.3	98.1	1.5	2.6	3.0	2.6	1.5	45	98.00	164
37.5	685	300	729	98.1	98.6	98.6	98.5	1.1	2.2	2.6	2.3	1.1	45	98.20	205
50	799	180	1013	98.3	98.6	98.4	98.1	1.7	2.9	3.4	2.9	1.7	45	98.30	329
75	1042	250	1447	98.3	98.6	98.4	98.1	1.6	3.4	3.8	3.5	1.6	50	98.50	338

Type DT-3 150°C Rise NEMA TP-1

		Losses in Watts		Efficiency (Trise +20°)				% Regulation							
kVA	Weight	No Load	Total at Rise +20	25%	50%	75%	Full Load	100% PF	80% PF	% Imp.	X	R	Sound Level dB	TP1 Efficiency	Practical Max.
15	250	150	755	98.9	97.0	96.4	95.7	4.2	5.3	4.8	2.6	4.0	45	97.00	107
30	350	165	1100	97.3	97.5	97.0	96.5	3.2	4.5	5.2	4.1	3.1	45	97.50	204
37.5	415	210	1382	97.5	97.6	97.1	96.5	3.2	4.8	4.0	2.5	3.1	45	97.70	213
45	416	215	1786	97.4	97.4	96.9	96.2	3.6	5.5	4.6	3.0	3.5	45	97.70	212
50	647	270	1220	97.7	98.2	98.0	97.7	2.0	3.5	2.8	2.0	1.9	45	98.00	357
75	643	320	2903	97.9	97.5	97.1	96.4	3.6	7.4	4.3	2.5	3.4	50	98.00	338
112.5	876	420	3699	97.9	97.9	97.4	96.8	3.0	6.7	5.1	4.2	2.9	50	98.20	395
150	1064	530	4269	98.1	98.2	97.8	97.3	2.7	5.3	4.3	3.5	2.5	50	98.30	584
225	1569	560	7124	98.4	98.1	97.5	97.0	3.2	8.7	7.4	6.8	2.9	55	98.50	832
300	2050	730	7959	98.4	98.3	97.9	97.4	2.6	6.7	5.5	4.9	2.4	55	98.60	964
500	3681	1400	8292	98.8	98.9	98.7	98.4	1.6	7.4	6.8	6.7	1.4	60	98.70	1279

Typical Data for General-Purpose Dry-Type Distribution Transformers, Copper Wound

Type DT-3 115°C Rise NEMA TP-1

		Losses in Watts		Efficiency (Trise +20°)				% Regulation							
kVA	Weight	No Load	Total at Rise +20	25%	50%	75%	Full Load	100% PF	80% PF	% Imp.	X	R	Sound Level dB	TP1 Efficiency	Practical Max.
15	256	95	669	97.7	97.8	97.3	96.7	4.0	5.4	4.8	2.9	3.8	45	97.00	76
30	337	180	1077	97.7	97.8	97.3	96.8	3.0	6.2	4.6	3.5	3.0	45	97.50	144
45	446	215	1625	97.7	97.7	97.2	96.6	3.2	5.2	4.4	3.1	3.1	45	97.70	219
50	630	270	1213	97.8	98.2	98.0	97.7	2.0	3.5	3.0	2.3	1.9	45	98.00	320
75	662	320	2346	97.9	98.0	97.6	97.0	2.8	5.4	4.7	3.9	2.7	50	98.00	280
112.5	914	400	2953	98.1	98.2	97.9	97.4	2.5	5.7	5.0	4.5	2.3	50	98.20	345
150	1132	530	3364	98.3	98.5	98.2	97.8	2.0	4.8	4.4	4.0	1.9	50	98.30	535
225	2036	650	6445	98.4	98.3	97.8	97.3	2.9	8.8	8.1	7.7	2.6	55	98.50	524
300	2325	830	6038	98.6	98.7	98.4	98.1	2.0	5.7	5.2	4.9	1.7	55	98.60	620
500	3681	1400	7841	98.8	98.9	98.7	98.5	1.4	6.8	6.8	6.6	1.3	60	98.70	1344

Type DT-3 80°C Rise NEMA TP-1

		Losses in Watts		Efficiency (Trise +20°)				% Regulation							
kVA	Weight	No Load	Total at Rise +20	25%	50%	75%	Full Load	100% PF	80% PF	% Imp.	X	R	Sound Level dB	TP1 Efficiency	Practical Max.
15	349	135	390	96.6	97.7	97.7	97.6	1.8	2.4	2.1	1.3	1.7	45	97.00	150
30	410	210	823	97.3	97.9	97.7	97.4	2.1	3.4	3.0	2.1	2.0	45	97.50	164
45	504	200	1308	97.9	98.0	97.7	97.2	2.5	4.5	3.9	3.1	2.5	45	97.70	158
75	818	370	1837	97.9	98.2	98.0	97.7	2.0	9.3	4.3	3.8	2.0	50	98.00	312
112.5	1065	440	2409	98.1	98.3	98.0	97.6	1.8	3.8	3.3	2.8	1.8	50	98.20	584
150	1410	650	3349	98.3	98.5	98.3	97.9	1.9	3.9	3.7	3.2	1.8	50	98.30	531
225	2030	830	4096	98.4	98.7	98.5	98.3	1.6	5.4	5.4	5.2	1.5	55	98.50	856
300	3041	1100	4646	98.5	98.8	98.7	98.5	1.4	5.6	6.1	6.0	1.2	55	98.60	1251

Type KT-4 80°C Rise NEMA TP-1

		Losses in Watts		Efficiency (Trise +20°)				% Regulation							
kVA	Weight	No Load	Total at Rise +20	25%	50%	75%	Full Load	100% PF	80% PF	% Imp.	X	R	Sound Level dB	TP1 Efficiency	Practical Max.
15	251	100	635	96.8	97.1	96.6	96.0	3.7	5.0	4.2	2.1	3.6	45	97.00	88
30	326	165	1134	97.4	97.5	97.1	96.5	3.5	5.3	4.3	2.9	3.2	45	97.50	168
45	479	220	1505	97.6	97.8	97.3	96.8	3.0	5.6	5.0	4.1	2.9	45	97.70	223
75	463	300	2883	97.9	97.7	97.1	96.4	3.6	7.1	5.9	4.7	3.4	50	98.00	325
112.5	977	440	2952	98.1	98.2	97.9	97.5	2.6	6.6	5.6	5.1	2.2	50	98.20	344
150	1212	540	3716	98.3	98.4	98.0	97.6	2.4	6.0	5.1	4.6	2.1	50	98.30	524
225	1815	650	5420	98.4	98.5	98.1	97.7	2.4	7.6	6.5	6.2	2.1	55	98.50	565
300	2400	830	6259	98.6	98.6	98.4	98.0	2.2	6.3	5.2	4.9	1.8	55	98.60	864

Typical Data for General-Purpose Dry-Type Distribution Transformers, Copper Wound

Type KT-4 115°C Rise NEMA TP-1

		Losses in Watts		Efficiency (Trise +20°)				% Regulation							
kVA	Weight	No Load	Total at Rise +20	25%	50%	75%	Full Load	100% PF	80% PF	% Imp.	X	R	Sound Level dB	TP1 Efficiency	Practical Max.
15	256	95	702	96.7	96.9	96.3	95.6	4.2	5.7	5.0	2.9	4.0	45	97.00	93
30	341	165	1007	97.4	97.6	97.3	96.8	3.0	4.8	4.2	3.1	2.8	45	97.50	155
45	526	220	1200	97.9	98.1	97.9	97.5	2.3	5.0	4.1	3.5	2.2	50	97.70	211
75	759	300	1715	98.1	98.3	98.1	97.8	1.9	5.0	4.5	4.1	1.9	50	98.00	309
112.5	1030	470	2735	98.0	98.3	98.0	97.7	2.2	4.4	3.8	3.2	2.0	50	98.20	390
150	1631	650	3076	98.2	98.5	98.3	98.1	1.7	4.9	4.5	4.2	1.6	50	98.30	416
225	1965	690	4434	98.5	98.6	98.4	98.1	1.9	5.6	5.3	5.0	1.7	55	98.50	659
300	2337	830	6127	98.6	98.7	98.4	98.0	2.0	5.2	4.7	4.3	1.8	55	98.60	729

Type KT-4 80°C Rise NEMA TP-1

		Losses in Watts		Efficiency (Trise +20°)				% Regulation							
kVA	Weight	No Load	Total at Rise +20	25%	50%	75%	Full Load	100% PF	80% PF	% Imp.	X	R	Sound Level dB	TP1 Efficiency	Practical Max.
15	365	165	371	97.0	98.0	98.1	98.0	1.5	2.3	2.1	1.5	1.4	45	97.00	166
30	424	210	787	97.3	97.9	97.8	97.6	2.0	3.2	2.9	2.2	1.9	45	97.50	219
45	653	290	977	97.4	98.1	98.1	98.0	1.6	3.1	3.0	2.5	1.5	45	97.70	308
75	640	350	1951	97.8	98.1	97.8	97.5	2.2	5.2	4.9	4.4	2.1	50	98.00	284
112.5	1264	560	2009	98.2	98.7	98.6	98.4	1.4	4.3	4.2	4.0	1.3	50	98.20	483
150	1825	650	2873	98.5	98.7	98.5	98.2	1.6	6.1	6.4	6.3	1.5	50	98.30	429
225	2096	890	4449	98.3	98.6	98.4	98.1	1.8	6.5	6.6	6.4	1.6	55	98.50	764

Type KT-13 150°C Rise NEMA TP-1

		Losses in Watts		Efficiency (Trise +20°)				% Regulation							
kVA	Weight	No Load	Total at Rise +20	25%	50%	75%	Full Load	100% PF	80% PF	% Imp.	X	R	Sound Level dB	TP1 Efficiency	Practical Max.
15	346	165	461	96.2	97.4	97.5	97.3	2.1	3.0	2.5	1.6	2.0	45	97.00	176
30	390	190	908	97.2	97.7	97.5	97.1	2.6	4.0	3.3	2.3	2.4	45	97.50	193
45	623	235	1328	97.6	97.9	97.6	97.2	2.5	3.2	2.8	1.4	2.4	45	97.70	285
75	848	370	2402	97.7	97.9	97.5	97.0	2.8	5.7	4.5	3.6	2.7	50	98.00	348
112.5	1080	455	2991	98.0	98.2	97.9	97.4	2.4	4.3	3.5	2.7	2.3	50	98.20	393
150	1431	600	3686	98.2	98.3	98.1	97.7	2.3	5.1	4.2	3.7	2.1	50	98.30	416
225	2129	830	4250	98.4	98.6	98.4	98.2	2.0	6.3	5.4	5.1	1.5	55	98.50	923

Type KT-13 115°C Rise NEMA TP-1

		Losses in Watts		Efficiency (Trise +20°)				% Regulation							
kVA	Weight	No Load	Total at Rise +20	25%	50%	75%	Full Load	100% PF	80% PF	% Imp.	X	R	Sound Level dB	TP1 Efficiency	Practical Max.
15	341	165	378	96.6	97.8	97.9	97.9	1.5	2.4	2.1	1.6	1.4	45	97.00	157
30	444	188	824	97.1	97.8	97.6	97.3	2.2	3.6	3.1	2.2	2.1	45	97.50	206
45	598	250	1476	97.4	97.7	97.4	96.9	2.8	4.6	4.0	2.9	2.7	45	97.70	313
75	894	350	2128	97.9	98.1	97.9	97.5	1.9	5.1	4.6	4.0	2.4	50	98.00	282
112.5	1054	460	2612	98.1	98.3	98.1	97.8	2.0	4.3	3.3	2.6	1.9	50	98.20	458
150	1399	600	3185	98.2	98.5	98.3	98.0	2.0	5.9	5.4	5.1	1.7	50	98.30	460
225	2088	890	4382	98.3	98.6	98.4	98.2	1.8	6.1	5.7	5.5	1.6	55	98.50	830

Typical Data for General-Purpose Dry-Type Distribution Transformers, Copper Wound

Type KT-13 80°C Rise NEMA TP-1

		Losses in Watts		Efficiency (Trise +20°)				% Regulation							
kVA	Weight	No Load	Total at Rise +20	25%	50%	75%	Full Load	100% PF	80% PF	% Imp.	X	R	Sound Level dB	TP1 Efficiency	Practical Max.
15	370	165	382	96.7	97.8	97.9	97.8	1.5	2.4	2.2	1.6	1.4	45	97.00	157
30	490	188	595	97.4	98.2	98.2	98.1	1.4	3.0	2.8	2.5	1.4	45	97.50	197
45	635	290	1189	97.4	97.9	97.8	97.5	2.1	3.9	3.5	2.8	2.0	45	97.70	245
75	987	410	1351	97.7	98.9	98.4	98.3	1.4	2.8	2.6	2.3	1.3	50	98.00	530
112.5	854	560	2039	98.1	98.6	98.5	98.3	1.4	4.2	4.3	4.1	1.3	50	98.20	458
150	1807	650	3053	98.0	98.4	98.3	98.0	1.7	4.3	4.0	3.7	1.6	50	98.30	490
225	4091	1200	2364	98.2	98.9	99.1	99.1	0.6	2.7	2.9	2.8	0.5	55	98.50	1440

Type KT-13 115°C Rise E3 Efficient

		Losses in Watts		Efficiency (Trise +20°)				% Regulation							
kVA	Weight	No Load	Total at Rise +20	25%	50%	75%	Full Load	100% PF	80% PF	% Imp.	X	R	Sound Level dB	TP1 Efficiency	Practical Max.
15	3.25	78	359	97.6	98.1	98.0	97.7	2.0	3.7	3.2	2.6	1.9	45	98.00	102
30	370	125	636	98.1	98.4	98.3	98.0	1.7	2.7	2.3	1.6	1.7	45	98.30	260
45	635	135	1076	98.5	98.5	98.1	97.7	2.2	4.1	3.5	2.8	2.1	45	98.50	206
75	870	225	1529	98.5	98.6	98.4	98.0	1.9	4.9	4.4	4.1	1.7	50	98.60	331
112.5	1526	350	1768	98.6	98.8	98.7	98.5	1.3	3.5	3.1	2.8	1.3	50	98.80	816
150	1665	350	2419	97.8	98.9	98.7	98.4	1.5	4.5	4.2	3.9	1.4	50	98.90	659
225	2094	650	3650	98.9	98.9	98.8	98.5	1.5	5.4	5.2	5.1	1.3	55	99.00	895
300	3900	750	3731	98.9	99.1	99.0	98.8	1.3	5.2	5.2	5.1	1.0	55	99.04	997

Type KT-9 115°C Rise E3 Efficient

		Losses in Watts		Efficiency (Trise +20°)				% Regulation							
kVA	Weight	No Load	Total at Rise +20	25%	50%	75%	Full Load	100% PF	80% PF	% Imp.	X	R	Sound Level dB	TP1 Efficiency	Practical Max.
15	335	78	353	97.4	98.0	98.0	97.7	2.0	3.7	3.2	2.6	1.8	45	98.00	96
30	406	125	670	98.0	98.3	98.1	97.8	1.9	2.7	2.4	1.5	1.8	45	98.30	260
45	635	135	1075	98.6	98.5	98.2	97.7	2.3	4.1	3.5	2.8	2.1	45	98.50	201
75	870	210	1551	98.5	98.6	98.3	98.0	1.9	4.0	3.6	3.1	1.8	50	98.60	319
112.5	1526	350	1583	98.6	98.9	98.8	98.6	1.2	3.0	2.7	2.5	1.1	50	98.80	827
150	1665	350	2463	98.8	98.9	98.7	98.4	1.6	4.5	4.2	4.0	1.4	50	98.90	643
225	2094	650	3766	98.8	98.9	98.7	98.4	1.7	5.5	5.2	5.0	1.4	55	99.00	926

Typical Data for General-Purpose Dry-Type Distribution Transformers, Copper Wound

Type NON HMT 115°C Rise NEMA TP-1

		Losses in Watts		Efficiency (Trise +20°)				% Regulation							
kVA	Weight	No Load	Total at Rise +20	25%	50%	75%	Full Load	100% PF	80% PF	% Imp.	X	R	Sound Level dB	TP1 Efficiency	Practical Max.
15	362	80	527	97.6	97.7	97.3	96.7	3.2	5.9	5.1	4.2	3.0	45	97.00	—
30	430	100	1040	98.3	98.0	97.4	96.7	3.2	6.2	5.4	4.4	3.1	45	97.50	—
45	627	170	1368	98.3	98.2	97.7	97.2	2.8	6.0	5.2	4.4	2.7	45	97.70	—
75	926	250	2096	98.4	98.3	97.9	97.4	2.6	7.0	6.2	5.7	2.5	50	98.00	—
112.5	1628	400	2515	98.4	98.5	98.3	97.9	2.0	5.5	4.9	4.5	1.9	50	98.20	—
150	2001	500	2688	98.5	98.7	98.6	98.3	1.6	5.6	5.2	5.0	1.5	50	98.30	—
225	3596	590	3310	98.8	98.9	98.8	98.6	1.5	6.2	6.0	5.9	1.2	55	98.50	—
300	3891	800	4854	98.7	98.9	98.7	98.4	1.7	7.1	7.0	6.8	1.4	55	98.60	—

Type THR HMT 115°C Rise NEMA TP-1

		Losses in Watts		Efficiency (Trise +20°)				% Regulation							
kVA	Weight	No Load	Total at Rise +20	25%	50%	75%	Full Load	100% PF	80% PF	% Imp.	X	R	Sound Level dB	TP1 Efficiency	Practical Max.
15	—	80	708	97.1	97.0	96.4	95.5	4.3	7.4	6.3	4.7	4.2	45	97.00	—
30	450	100	1409	98.0	97.4	96.5	95.6	4.7	8.0	6.8	5.2	4.4	45	97.50	—
45	610	170	1374	98.2	98.1	97.7	97.1	2.8	4.8	4.2	3.2	2.7	45	97.70	—
75	868	250	2341	98.2	98.1	97.6	97.0	2.9	6.6	5.8	5.0	2.8	50	98.00	—
112.5	1643	400	2685	98.3	98.4	98.1	97.7	2.2	5.5	5.0	4.6	2.0	50	98.20	—
150	—	500	3304	98.5	98.6	98.3	97.9	2.0	6.7	6.3	6.0	1.9	50	98.30	—
225	3370	590	3712	98.7	98.8	98.7	98.4	1.7	6.6	6.4	6.2	1.4	55	98.50	—
300	3894	800	4688	98.9	99.0	98.8	98.5	1.7	7.4	7.2	7.1	1.3	55	98.60	—

Typical Specifications—General-Purpose (1000 kVA and Below)

General

Furnish and install, single-phase and three-phase general-purpose individually mounted dry-type transformers of the two-winding type, self-cooled, with ratings and voltages as indicated on the drawings. Transformers shall be manufactured by Eaton.

Transformers shall be designed, manufactured and tested in accordance with all the latest applicable ANSI, NEMA and IEEE Standards. All 600-volt class transformers through 1000 kVA shall be UL listed and bear the UL label.

Transformers shall be designed for continuous operation at rated kVA, for operation 24 hours a day, 365 days a year, with normal life expectancy as defined in ANSI C57.96.

Insulation Systems

Transformers shall be insulated as follows:

- **Type EP or EPT:** 0.050 through 75 kVA: 180°C insulation system
- **Type DS-3 or DT-3:** 15 kVA and above: 220°C insulation system

Required performance shall be obtained without exceeding the above indicated temperature rise in a 40°C maximum ambient, with a 30°C average over 24 hours.

All insulation materials shall be flame-retardant and shall not support combustion as defined in ASTM Standard Test Method D635.

Core and Coil Assemblies

Transformer core shall be constructed with high-grade, non-aging, silicon steel with high magnetic permeability, and low hysteresis and eddy current losses. Maximum magnetic flux densities shall be substantially below the saturation point. The transformer core volume shall allow efficient transformer operation at 10% above the nominal tap voltage. The core laminations shall be tightly clamped and compressed. Coils shall be wound of electrical-grade [aluminum] [copper] and continuous wound construction. BIL (basic impulse level) for all 600-volt class windings shall be 10 kV.

On encapsulated units rated [75 kVA and below] [15 kVA and below] [9 kVA and below], the core and coil assembly shall be completely encapsulated in a proportioned mixture of resin or epoxy and aggregate to provide a moisture-proof, shock-resistant seal. The core and coil encapsulation system shall minimize the sound level.

On ventilated units rated [15 kVA and above] [30 kVA and above] [112.5 kVA and above], the core and coil assembly shall be installed on neoprene vibration-absorbing pads.

Enclosures

The enclosure shall be made of heavy-gauge steel and shall be finished using a continuous process of degreasing, cleaning and phosphatizing, followed by electrostatic deposition of a thermosetting polyester powder coating and subsequent baking. The coating color shall be ANSI 61 and shall be UL recognized for outdoor use. The maximum temperature on top of the enclosure shall not exceed 90°C.

On units rated [75 kVA and below] [15 kVA and below] [9 kVA and below] encapsulated, the enclosure construction shall be totally enclosed, non-ventilated, NEMA 3R, with lifting provisions.

On units rated [15 kVA and above] [30 kVA and above] [112.5 kVA and above], the enclosure construction shall be ventilated, NEMA 2, drip-proof, with lifting provisions. All ventilation openings shall be protected against falling dirt. On outdoor units, provide suitable weathershields over ventilation openings.

Tests

The following tests shall be performed as standard on all transformers:

1. Ratio tests at the rated voltage connection and at all tap connections.
2. Polarity and phase relation tests on the rated voltage connection.
3. Applied potential tests.
4. Induced potential test.
5. No-load and excitation current at rated voltage on the rated voltage connection.

Sound Levels

Transformer average sound levels shall not exceed the following ANSI and NEMA levels for self-cooled ratings measured in accordance with NEMA ST-20.

Average Sound Levels

NEMA ST-20 Average Sound Level, dB

Equivalent Winding kVA Range	Self-Cooled Ventilated (up to 1.2 kV) K-Factor 1, 4, 9	Self-Cooled Ventilated (up to 1.2 kV) K-Factor 13, 20	Encapsulated (up to 1.2 kV)
3.00 and below	40	40	45
3.01 to 9.00	40	40	45
9.01 to 15.00	45	45	50
15.01 to 30.00	45	45	50
30.01 to 50.00	45	48	50
50.01 to 75.00	50	53	55
75.01 to 112.50	50	53	55
112.51 to 150.00	50	53	55
150.01 to 225.00	55	58	57
225.01 to 300.00	55	58	57
300.01 to 500.00	60	63	59
500.01 to 700.00	62	65	61
700.01 to 1000.00	64	67	63
Greater than 1000	Consult factory	Consult factory	Consult factory

Typical Specification—DOE 2016 Energy-Efficient Transformers

General

Furnish and install, single- and three-phase energy-efficient dry-type transformers that comply with CFR Title 10 Chapter II Part 431, Appendix A of Subpart K 2016. Transformers shall be of the two-winding type, self-cooled, with ratings (kVA) as indicated on the drawings. Transformer's losses shall conform to 10 CFR Part 431 requirements. Transformers shall be manufactured by Eaton.

Transformers shall be designed, manufactured and tested in accordance with all the latest applicable ANSI, NEMA and IEEE Standards, and shall be listed by Underwriters Laboratories and bear the UL label.

Transformers shall be designed for continuous operation at rated kVA, for 24 hours a day, 365 days a year, with normal life expectancy as defined in ANSI C57.96.

Insulation System and Temperature Rise

Transformers shall be insulated with a 220°C insulation system. Transformers shall be 150°C rise and shall be capable of carrying a 15% continuous overload without exceeding a 150°C rise. Required performance shall be obtained without exceeding the above rise in a 40°C maximum, 30°C average ambient temperature.

All insulation materials shall be flame-retardant and shall not support combustion as defined in ASTM Standard Test Method D635.

Core and Coil Assemblies

Transformer core shall be constructed with high-grade, non-aging, silicon steel with high magnetic permeability, and low hysteresis and eddy current losses. Maximum magnetic flux densities shall be substantially below the saturation point.

The transformer core volume shall allow efficient transformer operation at 10% above the nominal tap voltage. The core laminations shall be tightly clamped and compressed. Coils shall be wound of electrical grade [aluminum] [copper] and continuous wound construction. BIL (basic impulse level) for all 600-volt class windings shall be 10 kV.

The core and coil assembly shall be installed on neoprene vibration-absorbing pads.

Enclosures

The enclosure shall be made of heavy gauge steel and shall be finished utilizing a continuous process of degreasing, cleaning and phosphatizing, followed by electrostatic deposition of a thermosetting polyester powder coating and subsequent baking. The coating color shall be ANSI 61 and shall be UL recognized for outdoor use.

The enclosure construction shall be ventilated, NEMA 2, drip-proof, with lifting provisions. All ventilation openings shall be protected against falling dirt.

All transformers shall be equipped with a wiring compartment suitable for conduit entry and large enough to allow convenient wiring. The maximum temperature on top of the enclosure shall not exceed 90°C.

Tests

The following tests shall be performed as standard on all transformers:

1. Ratio tests at the rated voltage connection and at all tap connections.
2. Polarity and phase relation tests on the rated voltage connection.
3. Applied potential tests.
4. Induced potential test.
5. No-load and excitation current at rated voltage on the rated voltage connection.

Efficiency

Transformers shall be energy-efficient with minimum efficiencies as set forth per NEMA TP-1-2002 and U.S. DOE 10 CFR Parts 430 and 431 when operated at 35% of full load capacity. Transformer must bear the UL Energy Efficiency Verification Mark to confirm that the unit meets the requirements of 10 CFR Part 431.

DOE 2016 Efficiency Levels

Dry-Type Distribution Transformers—Low-Voltage (600 V and below)

Single-Phase		Three-Phase	
kVA	Efficiency	kVA	Efficiency
15	97.70	15	97.89
25	98.00	30	98.23
37.5	98.20	45	98.40
50	98.30	75	98.60
75	98.50	112.5	98.74
100	98.60	150	98.83
167	98.70	225	98.94
250	98.80	300	99.02
333	98.90	500	99.14
—	—	750	99.23
—	—	1000	99.28

Sound Levels

Transformer average sound levels shall not exceed the following ANSI and NEMA levels for self-cooled ratings.

Average Sound Levels

NEMA ST-20 Average Sound Level, dB

Equivalent Winding kVA Range	Self-Cooled Ventilated (up to 1.2 kV) K-Factor 1, 4, 9	Self-Cooled Ventilated (up to 1.2 kV) K-Factor 13, 20	Encapsulated (up to 1.2 kV)
3.00 and below	40	40	45
3.01 to 9.00	40	40	45
9.01 to 15.00	45	45	50
15.01 to 30.00	45	45	50
30.01 to 50.00	45	48	50
50.01 to 75.00	50	53	55
75.01 to 112.50	50	53	55
112.51 to 150.00	50	53	55
150.01 to 225.00	55	58	57
225.01 to 300.00	55	58	57
300.01 to 500.00	60	63	59
500.01 to 700.00	62	65	61
700.01 to 1000.00	64	67	63
Greater than 1000	Consult factory	Consult factory	Consult factory

Typical Specifications—Dry-Type Transformers for Nonlinear Loads

General

Furnish and install, individually mounted dry-type transformers of the two-winding type, self-cooled, with ratings and voltages as indicated on the drawings.

Transformers shall be manufactured by Eaton.

Transformers shall be designed, manufactured and tested in accordance with all the latest applicable ANSI, NEMA and IEEE Standards. All 600-volt class transformers through 500 kVA shall be UL listed as suitable for non-sinusoidal current loads with K factor not to exceed [4] [13] [20].

Insulation Systems

Transformers shall be insulated with a UL recognized 220°C insulation system. Winding temperature rise shall be [80°C] [115°C] [150°C].

Required performance shall be obtained without exceeding the above indicated temperature rise in a 40°C maximum ambient, with a 30°C average.

All insulation materials shall be flame-retardant and shall not support combustion as defined in ASTM Standard Test Method D635.

Core and Coil Assemblies

Transformer core shall be constructed with high-grade, non-aging, silicon steel with high magnetic permeability, and low hysteresis and eddy current losses. Maximum magnetic flux densities shall be substantially below the saturation point. The transformer core volume shall allow efficient transformer operation at 10% above the nominal tap voltage. The core laminations shall be tightly clamped and compressed.

Transformer coils shall be wound of electrical-grade [aluminum] [copper] conductor with continuous wound construction. An electrostatic shield consisting of a single turn of aluminum shall be placed between the primary and secondary winding and grounded to the transformer core. BIL (basic impulse level) for all 600-volt class windings shall be 10 kV.

The core and coil assembly shall be installed on neoprene vibration-absorbing pads.

The neutral conductor shall be rated to carry 200% of normal phase current.

Enclosures

The enclosure shall be made of heavy gauge steel and shall be finished utilizing a continuous process of degreasing, cleaning and phosphatizing, followed by electrostatic deposition of a polymer polyester powder coating and baking. The coating color shall be ANSI 61 and shall be UL recognized for outdoor use. The maximum temperature on top of the enclosure shall not exceed 90°C.

The enclosure construction shall be ventilated, NEMA 2, drip-proof, with lifting provisions. All ventilation openings shall be protected against falling dirt. On outdoor units, provide suitable weathershields over ventilation openings. **To ensure proper ventilation, locate the unit at least 6 inches (152.4 mm) from the adjacent wall or structure.**

Nonlinear Ratings

The transformers shall be specifically designed to supply circuits with a harmonic profile equal to or less than a K-factor of 4 or 13 as described below without exceeding [80°C] [115°C] [150°C] temperature rise.

Nonlinear Ratings

Harmonic	K-4	K-13
Fundamental	100.0%	100.0%
3rd	34.0%	70.0%
5th	22.0%	42.0%
7th	3.0%	5.0%
9th	1.0%	3.0%
11th	0.7%	3.0%
13th	0.5%	1.0%
15th	0.3%	0.7%
17th	0.3%	0.6%

Tests

The following tests shall be performed as standard on all transformers:

1. Ratio tests at the rated voltage connection and at all tap connections.
2. Polarity and phase relation tests on the rated voltage connection.
3. Applied potential tests.
4. Induced potential test.
5. No-load and excitation current at rated voltage on the rated voltage connection.

Sound Levels

Transformer average sound levels shall not exceed the following ANSI and NEMA levels for self-cooled ratings measured in accordance with NEMA ST-20.

Average Sound Levels

NEMA ST-20 Average Sound Level, dB

Equivalent Winding kVA Range	Self-Cooled Ventilated (up to 1.2 kV) K-Factor 1, 4, 9	Self-Cooled Ventilated (up to 1.2 kV) K-Factor 13, 20	Encapsulated (up to 1.2 kV)
3.00 and below	40	40	45
3.01 to 9.00	40	40	45
9.01 to 15.00	45	45	50
15.01 to 30.00	45	45	50
30.01 to 50.00	45	48	50
50.01 to 75.00	50	53	55
75.01 to 112.50	50	53	55
112.51 to 150.00	50	53	55
150.01 to 225.00	55	58	57
225.01 to 300.00	55	58	57
300.01 to 500.00	60	63	59
500.01 to 700.00	62	65	61
700.01 to 1000.00	64	67	63
Greater than 1000	Consult factory	Consult factory	Consult factory

Typical Specification—AC Adjustable Frequency Drive Isolation Transformers

General

Furnish and install, single-phase and three-phase general-purpose individually mounted dry-type transformers of the two-winding type, self-cooled, with ratings and voltages for input application as indicated on the drawings. Transformers shall be manufactured by Eaton.

Transformers shall be designed, manufactured and tested in accordance with all the latest applicable ANSI, NEMA and IEEE Standards. All 600-volt class transformers through 550 kVA shall be UL listed and bear the UL label.

Transformers shall be designed for continuous operation at rated kVA, for operation 24 hours a day, 365 days a year, with normal life expectancy as defined in ANSI C57.96.

Insulation Systems

Transformers shall be insulated with a UL recognized 220°C insulation system.

Required performance shall be obtained without exceeding the above indicated temperature rise in a 40°C maximum ambient, with a 30°C average over 24 hours.

All insulation materials shall be flame-retardant and shall not support combustion as defined in ASTM Standard Test Method D635.

Core and Coil Assemblies

Transformer core shall be constructed with high-grade, non-aging, silicon steel with high magnetic permeability, and low hysteresis and eddy current losses. Maximum magnetic flux densities shall be substantially below the saturation point. The transformer core volume shall allow efficient transformer operation at 10% above the nominal tap voltage. The core laminations shall be tightly clamped and compressed. Coils shall be wound of electrical-grade [aluminum] [copper] and continuous wound construction. BIL (basic impulse level) for all 600-volt class windings shall be 10 kV.

A temperature sensing device shall be imbedded in the center coil.

The core and coil assembly shall be installed on neoprene vibration-absorbing pads.

Enclosures

The enclosure shall be made of heavy-gauge steel and shall be finished using a continuous process of degreasing, cleaning, and phosphatizing, followed by electrostatic deposition of a thermosetting polyester powder coating and subsequent baking. The coating color shall be ANSI 61 and shall be UL recognized for outdoor use. The maximum temperature on top of the enclosure shall not exceed 90°C.

The enclosure construction shall be ventilated, NEMA 2, drip-proof, with lifting provisions. All ventilation openings shall be protected against falling dirt. **To ensure proper ventilation, locate the unit at least 6 inches (152.4 mm) from the adjacent wall or structure. On outdoor units, provide suitable weathershields over ventilation openings.**

Sound Levels

Transformer average sound levels shall not exceed the following ANSI and NEMA levels for self-cooled ratings measured in accordance with NEMA ST-20.

The following table lists the recommended kVA size of the drive isolation transformer for a specific horsepower requirement.

Three-Phase

Horsepower AC Motor	kVA Minimum
5	7.5
7.5	11
10	14
15	20
20	27
25	34
30	40
40	51
50	63
60	75
75	93
100	118
125	145
150	175
200	220
250	275
300	330
400	440
500	550
600	660
700	770

Average Sound Levels

NEMA ST-20 Average Sound Level, dB

Equivalent Winding kVA Range	Self-Cooled Ventilated (up to 1.2 kV) K-Factor 1, 4, 9	Self-Cooled Ventilated (up to 1.2 kV) K-Factor 13, 20	Encapsulated (up to 1.2 kV)
3.00 and below	40	40	45
3.01 to 9.00	40	40	45
9.01 to 15.00	45	45	50
15.01 to 30.00	45	45	50
30.01 to 50.00	45	48	50
50.01 to 75.00	50	53	55
75.01 to 112.50	50	53	55
112.51 to 150.00	50	53	55
150.01 to 225.00	55	58	57
225.01 to 300.00	55	58	57
300.01 to 500.00	60	63	59
500.01 to 700.00	62	65	61
700.01 to 1000.00	64	67	63
Greater than 1000	Consult factory	Consult factory	Consult factory

Typical Specifications—Mini–Power Centers (3–30 kVA)

General

Furnish and install, single-phase and three-phase general-purpose individually mounted mini–power centers of the two-winding type, self-cooled, with ratings and voltages as indicated on the drawings. Mini–power centers shall be manufactured by Eaton.

Units shall be designed, manufactured and tested in accordance with all the latest applicable ANSI, NEMA, IEEE, CSA and UL standards, and shall be UL listed and CSA certified and bear the UL and CSA labels.

Units shall be designed for continuous operation at rated kVA, 24 hours a day, 365 days a year, with normal life expectancy as defined in ANSI C57.96.

Each mini–power center shall include a main primary breaker with an interrupting rating of 14 kA at 277/480 volts; an encapsulated dry-type transformer and a secondary panelboard with main breaker rated 10 kA interrupting rating at 120/240 volts.

1. All interconnecting wiring between the primary breaker and transformer, secondary main breaker and transformer, and distribution section shall be factory installed. Main primary, secondary and branch breakers shall be enclosed with a padlockable hinged door.
2. The secondary distribution section shall accommodate one-inch, plug-in breakers with 10 kA interrupting capacity.
3. On the all-copper, bolt-on designs, the secondary distribution section shall accommodate bolt-on breakers with 10 kA interrupting capacity.

Insulation System

Transformers shall be insulated with a 180°C insulation system.

Required performance shall be obtained without exceeding the above indicated temperature rise in a 40°C maximum ambient, with a 30°C average over 24 hours.

All insulation materials shall be flame-retardant and shall not support combustion as defined in ASTM Standard Test Method D635.

Core and Coil Assemblies

Transformer core shall be constructed with high-grade, non-aging, silicon steel with high magnetic permeability, and low hysteresis and eddy current losses. Maximum magnetic flux densities shall be substantially below the saturation point.

The transformer core volume shall allow efficient transformer operation at 10% above the nominal tap voltage. The core laminations shall be tightly clamped and compressed. Coils shall be wound of electrical-grade aluminum (copper) with continuous wound construction. BIL (basic impulse level) for all 600-volt class windings shall be 10 kV.

The core and coil assembly shall be completely encapsulated in a proportioned mixture of resin or expoxy and aggregate to provide a moisture-proof, shock-resistant seal. The core and coil encapsulation system shall minimize the sound level.

Enclosures

The enclosure shall be made of heavy-gauge steel and shall be finished using a continuous process of degreasing, cleaning, and phosphatizing, followed by electrostatic deposition of a thermosetting polymer polyester powder coating and subsequent baking. The coating color shall be ANSI 61 and shall be UL recognized for outdoor use. Mini–power centers shall be equipped with a wiring compartment suitable for conduit entry and large enough to allow convenient wiring. The maximum temperature on top of the enclosure shall not exceed 90°C. The core of the transformer shall be grounded to the enclosure. The enclosure shall be totally enclosed, non-ventilated, NEMA 3R, with lifting eyes.

Tests

The following tests shall be performed as standard on all transformers:

1. Ratio tests at the rated voltage connection and at all tap connections.
2. Polarity and phase relation tests on the rated voltage connection.
3. Applied potential tests.
4. Induced potential test.
5. No-load and excitation current at rated voltage on the rated voltage connection.

Sound Levels

Transformer average sound levels shall not exceed the following ANSI/NEMA levels for self-cooled ratings measured in accordance with NEMA ST-20.

Average Sound Levels

kVA	NEMA Average Sound Level in dB
0–9	45
10–30	50

Typical Specification—NEMA TP-1-2002 Compliant Energy-Efficient Transformers

General

Furnish and install, three-phase energy-efficient dry-type transformers that comply with NEMA Standard TP-1-2002 and U.S. DOE 10 CFR Parts 430 and 431. Transformers shall be of the two-winding type, self-cooled, with ratings (kVA) as indicated on the drawings. Transformer's losses shall conform to NEMA TP-1 requirements. Transformers shall be manufactured by Eaton.

Transformers shall be designed, manufactured and tested in accordance with all the latest applicable ANSI, NEMA and IEEE Standards, and shall be listed by Underwriters Laboratories and bear the UL label.

Transformers shall be designed for continuous operation at rated kVA, for 24 hours a day, 365 days a year, with normal life expectancy as defined in ANSI C57.96.

Insulation System and Temperature Rise

Transformers shall be insulated with a 220°C insulation system. Transformers shall be 150°C rise and shall be capable of carrying a 15% continuous overload without exceeding a 150°C rise. Required performance shall be obtained without exceeding the above rise in a 40°C maximum, 30°C average ambient temperature.

All insulation materials shall be flame-retardant and shall not support combustion as defined in ASTM Standard Test Method D635.

Core and Coil Assemblies

Transformer core shall be constructed with high-grade, non-aging, silicon steel with high magnetic permeability, and low hysteresis and eddy current losses. Maximum magnetic flux densities shall be substantially below the saturation point.

The transformer core volume shall allow efficient transformer operation at 10% above the nominal tap voltage. The core laminations shall be tightly clamped and compressed. Coils shall be wound of electrical grade [aluminum] [copper] and continuous wound construction. BIL (basic impulse level) for all 600-volt class windings shall be 10 kV.

The core and coil assembly shall be installed on neoprene vibration-absorbing pads.

Enclosures

The enclosure shall be made of heavy gauge steel and shall be finished utilizing a continuous process of degreasing, cleaning and phosphatizing, followed by electrostatic deposition of a thermosetting polyester powder coating and subsequent baking. The coating color shall be ANSI 61 and shall be UL recognized for outdoor use.

The enclosure construction shall be ventilated, NEMA 2, drip-proof, with lifting provisions. All ventilation openings shall be protected against falling dirt. **To ensure proper ventilation, locate the unit at least 6 inches (152.4 mm) from the adjacent wall or structure.**

All transformers shall be equipped with a wiring compartment suitable for conduit entry and large enough to allow convenient wiring. The maximum temperature on top of the enclosure shall not exceed 90°C.

Tests

The following tests shall be performed as standard on all transformers:

1. Ratio tests at the rated voltage connection and at all tap connections.
2. Polarity and phase relation tests on the rated voltage connection.
3. Applied potential tests.
4. Induced potential test.
5. No-load and excitation current at rated voltage on the rated voltage connection.

Efficiency

Transformers shall be energy-efficient with minimum efficiencies as set forth per NEMA TP-1-2002 and U.S. DOE 10 CFR Parts 430 and 431 when operated at 35% of full load capacity.

NEMA TP-1-2002 Efficiency Levels

NEMA Class 1 Efficiency Levels
Dry-Type Distribution Transformers—Low-Voltage (600 V and below)

Single-Phase		Three-Phase	
kVA	**Efficiency**	**kVA**	**Efficiency**
15	97.7	15	97.0
25	98.0	30	97.5
37.5	98.2	45	97.7
50	98.3	75	98.0
75	98.5	112.5	98.2
100	98.6	150	98.3
167	98.7	225	98.5
250	98.8	300	98.6
333	98.9	500	98.7
—	—	750	98.8
—	—	1000	98.9

Sound Levels

Transformer average sound levels shall not exceed the following ANSI and NEMA levels for self-cooled ratings.

Average Sound Levels

NEMA ST-20 Average Sound Level, dB

Equivalent Winding kVA Range	Self-Cooled Ventilated (up to 1.2 kV) K-Factor 1, 4, 9	Self-Cooled Ventilated (up to 1.2 kV) K-Factor 13, 20	Encapsulated (up to 1.2 kV)
3.00 and below	40	40	45
3.01 to 9.00	40	40	45
9.01 to 15.00	45	45	50
15.01 to 30.00	45	45	50
30.01 to 50.00	45	48	50
50.01 to 75.00	50	53	55
75.01 to 112.50	50	53	55
112.51 to 150.00	50	53	55
150.01 to 225.00	55	58	57
225.01 to 300.00	55	58	57
300.01 to 500.00	60	63	59
500.01 to 700.00	62	65	61
700.01 to 1000.00	64	67	63
Greater than 1000	Consult factory	Consult factory	Consult factory

Glossary of Transformer Terms

Air cooled: A transformer that is cooled by the natural circulation of air around, or through, the core and coils.

Ambient noise level: The existing or inherent sound level of the area surrounding the transformer, prior to energizing the transformer. Measured in decibels.

Ambient temperature: The temperature of the air surrounding the transformer into which the heat of the transformer is dissipated.

Ampacity: The current-carrying capacity of an electrical conductor under stated thermal conditions. Expressed in amperes.

Ampere: The practical unit of electric current.

Attenuation: A decrease in signal power or voltage. Unit of measure is dB.

Autotransformer: A transformer in which part of the winding is common to both the primary and the secondary circuits.

Banked: Two or more single-phase transformers wired together to supply a three-phase load. Three single-phase transformers can be "banked" together to support a three-phase load. For example, three 10 kVA single-phase transformers "banked" together will have a 30 kVA three-phase capacity.

BIL: Basic impulse level. The ability of a transformer's insulation system to withstand high voltage surges. All Eaton 600V-class transformers have a 10 kV BIL rating.

BTU: British thermal unit. In North America, the term "BTU" is used to describe the heat value (energy content) of fuels, and also to describe the power of heating and cooling systems, such as furnaces, stoves, barbecue grills and air conditioners. When used as a unit of power, BTU "per hour" (BTU/h) is understood, though this is often abbreviated to just "BTU."

Buck-boost: The name of a standard, single-phase, two-winding transformer application with the low-voltage secondary windings connected as an autotransformer for boosting (increasing) or bucking (decreasing) voltages in small amounts. Applications can either be single-phase or three-phase.

CE: Mark to indicate third-party approved or self-certification to specific requirements of the European community.

Celsius (centigrade): Metric temperature measure.

°F = (1.8 x °C) + 32

°C = (°F-32) / 1.8

Center tap: A tap at the mid-point of a winding. The center tap on three-phase delta-delta transformers is called a lighting tap. It provides 5% of the transformer's kVA for single-phase loads.

Certified tests: Actual values taken during production tests and certified as applying to a given unit shipped on a specific order. Certified tests are serial number–specific.

Common mode: Electrical noise or voltage fluctuation that occurs between all of the line leads and the common ground, or between ground and line or neutral.

Compensated transformer: A transformer with a turns ratio that provides a higher than nameplate output (secondary) voltage at no load, and nameplate output (secondary) voltage at rated load. It is common for small transformers (2 kVA and less) to be compensated.

Conductor losses: Losses (expressed in watts) in a transformer that are incidental to carrying a load: coil resistance, stray loss due to stray fluxes in the

windings, core clamps, and the like, as well as circulating currents (if any) in parallel windings. Also called load losses.

Continuous rating: The load that a transformer can handle indefinitely without exceeding its specified temperature rise.

Core losses: Losses (expressed in watts) caused by magnetization of the core and its resistance to magnetic flux. Also called no-load losses or excitation losses. Core losses are always present when the transformer is energized.

CSA: Canadian Standards Association. The Canadian equivalent of Underwriters Laboratories (UL).

cUL: Mark to indicate UL Certification to specific CSA Standards.

Decibel (dB): Unit of measure used to express the magnitude of a change in signal or sound level.

Delta connection: A standard three-phase connection with the ends of each phase winding connected in series to form a closed loop with each phase 120 degrees from the other. Sometimes referred to as three-wire.

Dielectric tests: Tests that consist of the application of a voltage higher than the rated voltage for a specified time for the purpose of determining the adequacy against breakdowns of insulating materials and spacings under normal conditions.

DOE 2016 efficient: A revision to federal law 10 CFR Part 431 (2007) that mandates higher efficiency for distribution transformers manufactured for sale in the U.S. and U.S. Territories effective January 1, 2016. "TP-1" efficient transformers can no longer legally be manufactured for use in the U.S. as of this date.

Dry-type transformer: A transformer in which the core and coils are in a gaseous or dry compound insulating medium. A transformer that is cooled by a medium other than a liquid, normally by the circulation of air.

Eddy currents: The currents that are induced in the body of a conducting mass by the time variation of magnetic flux or varying magnetic field.

Efficiency: The ratio of the power output from a transformer to the total power input. Typically expressed as a %.

Electrostatic shield: Copper or other conducting sheet placed between primary and secondary windings, and grounded to reduce electrical interference and to provide additional protection from line-to-line or line-to-ground noise. Commonly referred to as "Faraday shield."

There are no industry standards for electrostatic shield performance. Eaton-manufactured transformers have been tested by an independent laboratory to meet the following attenuation levels.

When tested per MIL-Std-220A, Method of Insertion Loss Measurement, with matched impedance no load technique:

1. Common mode noise attenuation: –80 dBA minimum at 0.1 kHz to 1.5 kHz; –55 dBA minimum at 1.51 kHz to 100 kHz.

2. Normal mode (Transverse mode) noise attenuation: –35 dBA minimum at 1.5 kHz to 10 kHz.

Primary to Secondary Capacitance of 24.74–18.06 picofarads on the range 100–20 kHz.

Encapsulated transformer: A transformer with its core coils either dipped or cast in an epoxy resin or other encapsulating substance.

Enclosure: A surrounding case or housing used to protect the contained equipment against external conditions and prevent personnel from accidentally contacting live parts.

Environmentally preferable product: A product that has a lesser or reduced negative effect on human health and the environment when compared to competing products that serve the same purpose. This comparison may consider raw materials acquisition, production, manufacturing, packaging, distribution, reuse, operation, maintenance and disposal of the product. This term includes recyclable products, recycled products and reusable products.

EPACT: The Energy Policy Act of 1992 (EPAct) is an important piece of legislation for efficiency because it established minimum efficiency levels for dry-type distribution transformers manufactured or imported after December 2006. EPAct, which was based on NEMA standards, defined a number of terms, including what constitutes an energy-efficient transformer. The DOE issued a rule that defines these transformers and how manufacturers must comply. DOE EPAct rule (PDF): Energy Efficiency Program for Certain Commercial and Industrial Equipment: Test Procedures, Labeling, and the Certification Requirements for Electric Motors. Final Rule. 10-CFR Part 431.

Excitation current: No load current. The current that flows in any winding used to excite the transformer when all other windings are open-circuited. It is usually expressed in percent of the rated current of a winding in which it is measured. Also called magnetizing current.

FCAN: "Full Capacity Above Nominal" taps. Designates the transformer will deliver its rated kVA when connected to a voltage source which is higher than the rated primary voltage.

FCBN: "Full Capacity Below Nominal" taps. Designates the transformer will deliver its rated kVA when connected to a voltage source which is lower than the rated primary voltage.

Frequency: On AC circuits, designates the number of times that polarity alternates from positive to negative and back again per second, such as 60 cycles per second. Typically measured in Hertz (Hz).

Ground: Connecting one side of a circuit to the earth through low resistance or low impedance paths to help prevent transmitting electrical shock to personnel.

Harmonic: A sinusoidal waveform with a frequency that is an integral multiple of the fundamental frequency (60 Hz).

60 H_3 fundamental
120 H_3 2nd harmonic
180 H_3 3rd harmonic
240 H_3 4th harmonic

Harmonic distortion: Nonlinear distortion of a system characterized by the appearance of harmonic (non-sinusoidal) currents in the output, when the input is sinusoidal.

Harmonic distortion, total (THD): The square root of the sum of the squares of all harmonic currents present in a load, excluding the fundamental 60 Hz current. Usually expressed as a percent of the fundamental.

High voltage windings: In a two-winding transformer, the winding intended to have the greater voltage. Usually marked with "H" designations.

HMT: Harmonic Mitigating Transformer (HMT) is better able to handle the harmonic currents present in today's electrical power system. thereby increasing system capacity, reducing distortion throughout a facility, help to minimize downtime and "mysterious" maintenance on equipment, and return the longevity of equipment life through reduced operational energy losses, thereby running cooler.

Hp: Horsepower. The energy required to raise 33,000 pounds a distance of one foot in one minute. 1 hp is equal to 746 watts, or 0.746 kW.

Hi pot: A standard test on dry-type transformers consisting of extra-high potentials (voltages) connected to the windings. Used to check the integrity of insulation materials and clearances.

Hottest-spot temperature: The highest temperature inside the transformer winding. Is greater than the measured average temperature of the coil conductors, when using the resistance change method.

Hysteresis: The tendency of a magnetic substance to persist in any state of magnetization.

Impedance: The retarding forces of current in an AC circuit; the current-limiting characteristics of a transformer. Symbol = Z

Inductance: In electrical circuits, the opposition to a change in the flow of electrical current. Symbol = L

Inducted potential test: A standard dielectric test of transformer insulation. Verifies the integrity of insulating materials and electrical clearances.

Inrush current: The initial high peak of current that occurs in the first few cycles of energization, which can be 30 to 40 times the rated current.

Insulating transformer: Another term for an isolating transformer.

Insulation: Material with a high electrical resistance.

Insulation materials: Those materials used to insulate the transformer's electrical windings from each other and ground.

Integral TVSS or SPD: Major Standard Change for Surge Protective Devices (formerly known as Transient Voltage Surge Suppressors). The primary safety standard for transient voltage surge suppressors (TVSS) has undergone major revisions in the past three years with mandatory compliance by manufacturers required by September 29, 2009. Even the name of the standard has changed from UL Standard for Safety for Transient Voltage Surge Suppressors, UL 1449 to UL Standard for Safety for Surge Protective Devices, UL 1449. This means that TVSS listed to the UL 1449 2nd Edition standard will no longer be able to be manufactured after September 29, 2009. All Surge Protective Devices must be designed, tested, manufactured and listed to the UL 1449 3rd Edition standard after this date.

Isolating transformer: A transformer where the input (primary) windings are not connected to the output (secondary) windings (i.e., electrically isolated).

K-factor: A common industry term for the amount of harmonics produced by a given load. The larger the K-factor, the more harmonics that are present. Also used to define a transformer's ability to withstand the additional heating generated by harmonic currents.

kVA: Kilovolt-ampere. Designates the output that a transformer can deliver for a specified time at a rated secondary voltage and rated frequency without exceeding the specified temperature rise. When multiplied by the power factor, will give kilowatts or kW.

1000 VA = 1 kVA

Lamination: Thin sheets of electrical steel used to construct the core of a transformer.

Limiting temperature: The maximum temperature at which a component or material may be operated continuously with no sacrifice in normal life expectancy.

Linear load: A load where the current waveform conforms to that of the applied voltage, or a load where a change in current is directly proportional to a change in applied voltage.

Live part: Any component consisting of an electrically conductive material that can be energized under conditions of normal use.

Load losses: I^2R losses in windings. Also see conductor losses.

Low-voltage winding: In a two-winding transformer, the winding intended to have the lesser voltage. Usually marked with "X" designations.

Mid-tap: See center tap.

Noise level: The relative intensity of sound, measured in decibels (dB). NEMA Standard ST-20 outlines the maximum allowable noise level for dry-type transformers.

Nonlinear load: A load where the current waveform does not conform to that of the applied voltage, or where a change in current is not proportional to a change in applied voltage.

Non-ventilated transformer: A transformer where the core and coil assembly is mounted inside an enclosure with no openings for ventilation. Also referred to as totally enclosed non-ventilated (TENV).

No load losses: Losses in a transformer that is excited at rated voltage and frequency but that is not supplying a load. No load losses include core losses, dielectric losses and conductor losses in the winding due to the exciting current. Also referred to as excitation losses.

Overload capability: Short-term overload capacity is designed into transformers as required by ANSI. Continuous overload capacity is not deliberately designed into a transformer because the design objective is to be within the allowed winding temperature rise with nameplate loading.

Percent IR (% resistance): Voltage drop due to resistance at rated current in percent of rated voltage.

Percent IX (% reactance): Voltage drop due to reactance at rated current in percent of rated voltage.

Percent IZ (% impedance): Voltage drop due to impedance at rated current in percent of rated voltage.

Phase: Type of AC electrical circuit; usually single-phase two- or three-wire, or three-phase three- or four-wire.

Polarity test: A standard test on transformers to determine instantaneous direction of the voltages in the primary compared to the secondary.

Primary taps: Taps added to the primary (input) winding. See Tap.

Primary voltage: The input circuit voltage.

Power factor: The cosine of the phase angle between a voltage and a current.

Ratio test: A standard test of transformers to determine the ratio of the input (primary) voltage to the output (secondary) voltage.

Reactance: The effect of inductive and capacitive components of a circuit producing other than unity power factor.

Reactor: A single winding device with an air or iron core that produces a specific amount of inductive reactance into a circuit. Normally used to reduce of control current.

Regulation: Usually expressed as the percent change in output voltage when the load goes from full load to no load.

Scott T connection: Connection for three-phase transformers. Instead of using three sets of coils for a three-phase load, the transformer uses only two sets of coils.

Series/multiple winding: A winding consisting of two or more sections that can be connected for series operation or multiple (parallel) operation. Also called series-parallel winding.

Short circuit: A low resistance connection, usually accidental, across part of a circuit, resulting in excessive current flow.

Sound levels: All transformers make some sound mainly due to the vibration generated in its core by alternating flux. All Eaton general-purpose dry-type distribution transformers are designed with sound levels lower than NEMA ST-20 maximum levels.

Star connection: Same as a wye connection.

Step-down transformer: A transformer where the input voltage is greater than the output voltage.

Step-up transformer: A transformer where the input voltage is less than the output voltage.

T-T connection: See Scott T connection.

Tap: A connection brought out of a winding at some point between its extremities, usually to permit changing the voltage or current ratio. Taps are typically used to compensate for above or below rated input voltage, in order to provide the rated output voltage. See FCAN and FCBN.

Temperature class: The maximum temperature that the insulation system of a transformer can continuously withstand. The common insulation classes are 105, 150, 180 (also 185) and 220.

Temperature rise: The increase over ambient temperature of the windings due to energizing and loading the transformer.

Total losses: The sum of the no-load losses and load losses.

Totally enclosed non-ventilated enclosure: The core and coil assembly is installed inside an enclosure that has no ventilation to cool the transformer. The transformer relies on heat to radiate from the enclosure for cooling.

Transformer tests: Per NEMA ST-20, routine transformer production tests are performed on each transformer prior to shipment. These tests are: *Ratio tests* on the rated voltage connection; *Polarity and Phase Relation tests* on the rated connection; *No-Load and Excitation Current tests* at rated voltage on the rated voltage connection and *Applied Potential and Induced Potential tests*. Special tests include sound level testing.

Transverse mode: Electrical noise or voltage disturbance that occurs between phase and neutral, or from spurious signals across metallic hot line and the neutral conductor.

Turns ratio: The ratio of the number of turns in the high voltage winding to that in the low-voltage winding.

Typical test data: Tests that were performed on similar units that were previously manufactured and tested.

UL (Underwriters Laboratories): An independent safety testing organization.

Universal taps: A combination of six primary voltage taps consisting of 2 at +2-1/2% FCAN and 4 at -2-1/2% FCBN.

Watt: A unit of electrical power when the current in a circuit is one ampere and the voltage is one volt.

Wye connection: A standard three-wire transformer connection with similar ends of single-phase coils connected together. The common point forms the electrical neutral point and may be grounded. Also referred to as three-phase four-wire. To obtain the line-to-neutral voltage, divide the line voltage by $\sqrt{3}(1.732)$.

Frequently Asked Questions About Transformers

Can 60 Hz transformers be used at other frequencies?

Transformers rated for 60 Hz can be applied to circuits with a higher frequency, as long as the nameplate voltages are not exceeded. The higher the frequency that you apply to a 60 Hz transformer, the less voltage regulation you will have. 60 Hz transformers may be used at lower frequencies but only at reduced voltages corresponding to the reduction in frequency. For example, a 480 to 120 volt 60 Hz transformer can carry rated kVA at 50 Hz but ONLY when applied as a 400 to 100 volt transformer (50/60 x 480 = 400).

Can single-phase transformers be used on a three-phase source?

Yes. Any single-phase transformer can be used on a three-phase source by connecting the primary terminals of the single-phase transformer to any two wires of a three-phase system. It does not matter whether the three-phase source is three-phase three-wire or three-phase four-wire. The output of the transformer will be single-phase.

Can transformers be used to create three-phase power from a single-phase system?

No. Single-phase transformers alone cannot be used to create the phase-shifts required for a three-phase system. Phase shifting devices (reactors or capacitors) or phase converters in conjunction with transformers are required to change single-phase power to three-phase.

What considerations need to be taken into account when operating transformers at high altitudes?

At altitudes greater than 3300 feet (1000 meters), the density of the air is less than at lower elevations. This reduces the ability of the air surrounding a transformer to cool it, so the temperature rise of the transformer is increased. Therefore, when a transformer is being installed at altitudes greater than 3300 feet above sea level, it is necessary to derate the usable capacity of the transformer. The table below lists the derating factors. As an example, a 75 kVA 480V–208Y/120V transformer installed at 10,000 feet needs to be derated by 4%. Instead of 208A output, the usable current is only 199A.

Altitude

Feet	Meters	Current Rating Factor
3300	1000	1.00
4000	1200	0.995
5000	1500	0.99
6000	1800	0.985
7000	2100	0.98
8000	2400	0.97
9000	2700	0.965
10,000	3000	0.96
12,000	3600	0.95
14,000	4200	0.935
15,000	4500	0.93

What considerations need to be taken into account when operating transformers where the ambient temperature is high?

Eaton's dry-type transformers are designed in accordance with ANSI standards to operate in areas where the average maximum ambient temperature is 40°C. For operation in ambient temperatures above 40°C, there are two options:

1. Order a custom designed transformer made for the specific application.
2. Derate the nameplate kVA of a standard transformer by 8% for each 10°C of ambient above 40°C.

What is the normal life expectancy of a transformer?

When a transformer is operated under ANSI/IEEE basic loading conditions ANSI C57.96), its normal life expectancy is 20 years. The ANSI/IEEE basic loading conditions are:

A. The transformer is continuously loaded at rated kVA and rated voltages.

B. The average temperature of the ambient air during any 24-hour period is equal to 30°C and at no time exceeds 40°C.

C. The altitude where the transformer is installed does not exceed 3300 feet (1000 meters).

What are insulation classes?

Insulation classes were originally used to distinguish insulating materials operating at different temperatures. In the past, letters were used for the different designations. Recently, insulation system temperatures (°C) have replaced the letters' designations.

Insulation Classes

Previous Designation	Insulation System Rating (°C)
Class A	105
Class B	150
Class F	180
Class H	220
Class R	220

How do you know if the enclosure temperature is too hot?

UL and CSA standards strictly regulate the highest temperature that an enclosure can reach. For ventilated transformers, the temperature of the enclosure should not increase by more than 50°C in a 40°C ambient at full rated current. For encapsulated transformers, the temperature of the enclosure should not increase by more than 65°C in a 25°C ambient at full rated current. This means that it is permissible for the temperature of the enclosure to reach 90°C (194°F). Although this temperature is very warm to the touch, it is within the allowed standards. A thermometer should be used to measure enclosure temperatures, not your hand.

Can transformers be reverse-connected (reverse-fed)?

Yes, with limitations. Eaton single-phase transformers rated 3 kVA and larger can be reverse-connected without any loss of kVA capacity or any adverse effects. Transformers rated 2 kVA and below, because there is a turns ratio compensation on the low-voltage winding that adjusts voltage between no load and full load conditions, should not be reverse-fed.

Three-phase transformers with either delta-delta or delta-wye configurations can also be reverse-connected for step-up operation. When reverse-feeding a delta-wye connected transformer, there are two important considerations to take into account: (1) The neutral is not connected, only the three-phase wires of the wye system are connected, and (2) the ground strap between X0 and the enclosure must be removed. Due to high inrush currents that may be created in these applications, it is recommended that you do not reverse-feed transformers rated more than 75 kVA. The preferred solution is to purchase an Eaton step-up transformer designed specifically for your application.

Can transformers be connected in parallel?

Yes, with certain restrictions. For single-phase transformers being connected in parallel, the voltages and impedances of the transformers must be equal (impedances must be within 7.5% of each other). For three-phase transformers, the same restrictions apply as for single-phase transformers, plus the phase shift of the transformers must be the same. For example, a delta-wye–connected transformer (30° phase shift) must be connected in parallel with another delta-wye–connected transformer, not a delta-delta connected–transformer (0° phase shift).

Why is the impedance of a transformer important?

The impedance of a transformer is important because it is used to determine the interrupting rating and trip rating of the circuit protection devices on the load or line side of the transformer. To calculate the maximum short circuit current on the load side of a transformer, use the following formula:

$$\text{Maximum Short Circuit Load Current (Amps)} = \frac{\text{Full Load Current (Amps)}}{\text{Transformer Impedance}}$$

Full load current for single-phase circuits is:

$$\frac{\text{Nameplate Volt-Amps}}{\text{Load (output) Voltage}}$$

and for three-phase circuits, the full load current is:

$$\frac{\text{Nameplate Volts-Amps}}{\text{Load (output) Volts} \times \sqrt{3}}$$

Example: For a standard three-phase, 75 kVA transformer, rated 480 volt delta primary and 208Y/120 volt secondary (catalog number V48M28T7516) and impedance equal to 5.1%, the full load current is:

$$\frac{75{,}000\ \text{VA}}{208\text{V} \times 1.732} = 208.2\text{A}$$

The maximum short circuit load current is:

$$\frac{208.2\text{A}}{0.051} = 4{,}082.4\text{A}$$

The circuit breaker or fuse on the secondary side of this transformer would have to have a minimum interrupting capacity of 4083 amperes at 208 volts. NEMA ST-20.

A similar transformer with lower impedance would require a primary circuit breaker or fuse with a higher interrupting capacity.

What clearances are required around transformers when they are installed?

All dry-type transformers depend upon the circulation of air for cooling; therefore, it is important that the flow of air around a transformer not be impeded. UL 1561 requires that there be no less than 6 inches (152.4 mm) clearance between any side transformer with ventilation openings and any wall or obstruction. In compliance with NEC 450.9, Eaton's ventilated transformers have a note on their nameplates requiring a minimum of 6 inches (152.4 mm) clearance from the ventilation openings and walls or other obstructions. This clearance only addresses the ventilation needs of the transformer. There may be additional local codes and standards that affect installation clearances.

Transformers should not be mounted in such a manner that one unit will contribute to the additional heating of another unit, beyond allowable temperature limits, for example, where two units are mounted on a wall one above the other.

Dimensions

Approximate Dimensions in Inches (mm)

2

Enclosure Dimensional Drawings—Ventilated Transformers

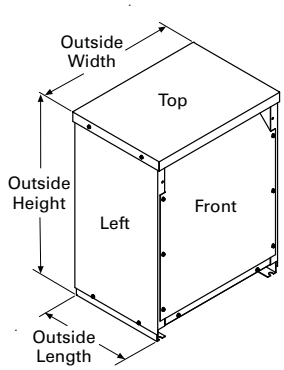

Drawing 1

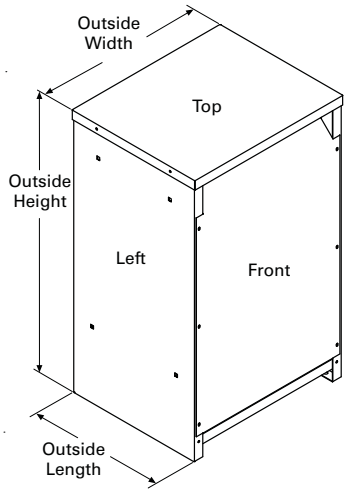

Drawing 2

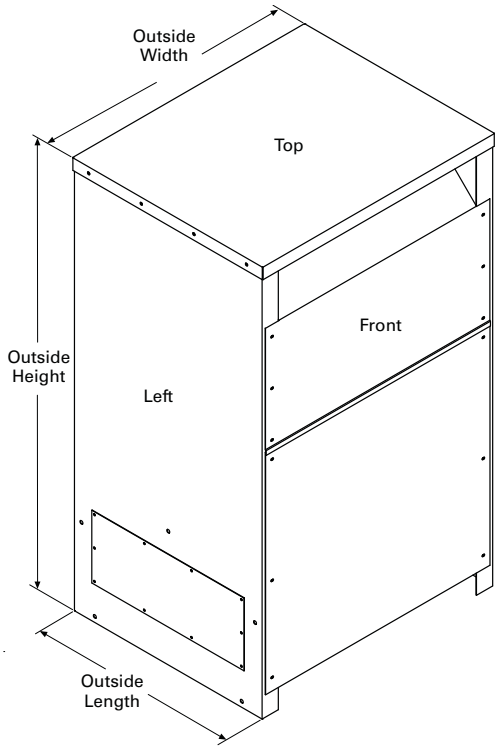

Drawing 3

Frame	Drawing Number	Dimensions Height	Width	Length
FR816	1	31.30 (795.0)	22.89 (581.4)	18.39 (467.2)
FR818	1	37.59 (954.8)	22.89 (581.4)	20.36 (517.1)
FR819	2	42.03 (1067.6)	24.22 (615.2)	23.84 (605.5)
FR820	2	42.03 (1067.6)	24.22 (615.2)	23.84 (605.5)
FR814	2	62.91 (1597.9)	29.97 (761.2)	33.97 (862.8)
FR842, 842A	1	33.75 (857.3)	22.45 (570.2)	17.40 (442.0)
FR843, 843A	1	38.70 (983.0)	23.51 (597.2)	24.38 (619.3)
FR844, 844A	2	44.92 (1141.0)	26.27 (667.3)	27.12 (688.8)
FR821	2	62.91 (1597.9)	29.97 (761.2)	33.97 (862.8)
FR912D	1	30.00 (762.0)	23.00 (584.2)	16.50 (419.1)
FR914D/FR914F	1	39.00 (990.6)	29.00 (736.6)	22.00 (558.8)
FR915D/FR915F	1	39.00 (990.6)	29.00 (736.6)	22.00 (558.8)
FR916A	2	48.56 (1233.4)	28.22 (716.8)	23.42 (594.9)
FR917	2	56.17 (1426.7)	31.44 (798.6)	24.67 (626.6)
FR918A	2	62.18 (1579.4)	31.44 (798.6)	30.68 (779.3)
FR923	2	57.54 (1461.5)	36.69 (931.9)	32.65 (829.3)
FR924	2	68.37 (1736.6)	44.46 (1129.3)	36.44 (925.6)
FR928	2	56.16 (1426.5)	32.93 (836.4)	27.97 (710.4)
FR929	2	59.56 (1512.8)	36.72 (932.7)	32.50 (825.5)
FR919E	3	75.00 (1905.0)	44.20 (1122.7)	36.23 (920.2)
FR920E	3	75.00 (1905.0)	44.20 (1122.7)	36.23 (920.2)
FR922	3	90.00 (2286.0)	69.26 (1759.2)	42.65 (1083.3)

Approximate Dimensions in Inches (mm)

Enclosure Dimensional Drawings—Ventilated Transformers, continued

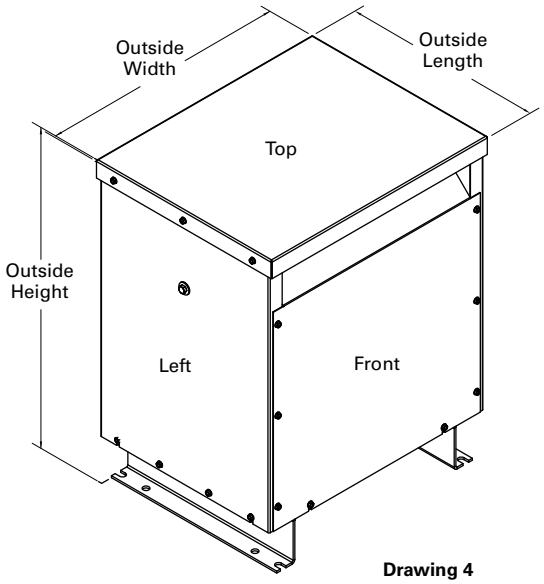

Drawing 4

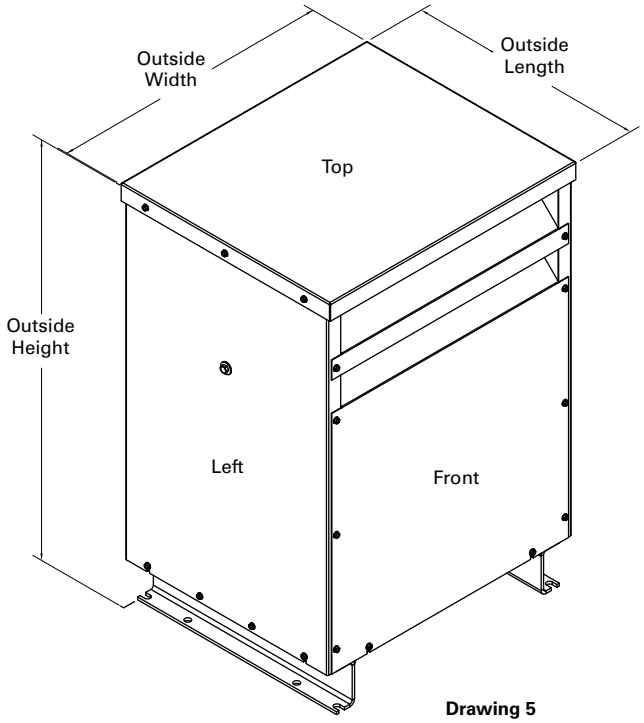

Drawing 5

Frame	Drawing Number	Dimensions Height	Width	Length
FR939	4	28.00 (711)	21.88 (556)	17.75 (451)
FR940	5	36.88 (937)	24.88 (632)	21.13 (537)
FR942	5	43.00 (1092)	30.50 (775)	24.00 (610)
FR943	5	51.00 (1295)	34.50 (876)	31.50 (800)
FR944	5	60.00 (1524)	38.00 (965)	33.50 (851)
FR945	5	66.18 (1681)	42.18 (1071)	33.50 (851)

Approximate Dimensions in Inches (mm)

Enclosure Dimensional Drawings—Encapsulated Transformers (Type EP)

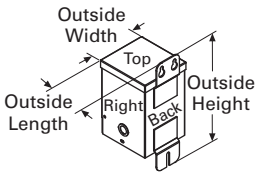

Drawing 6

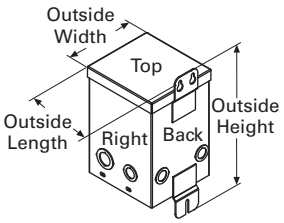

Drawing 7

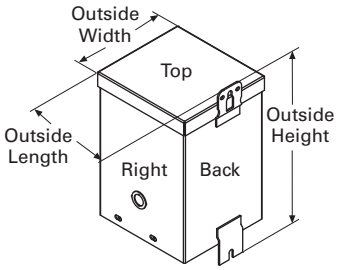

Drawing 8

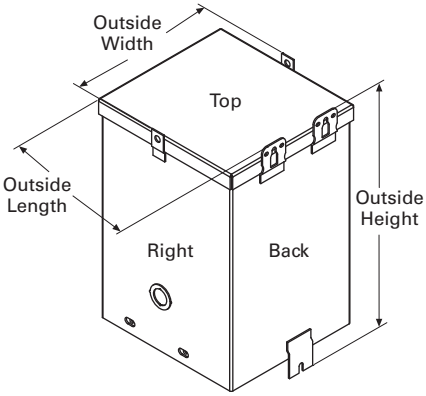

Drawing 9

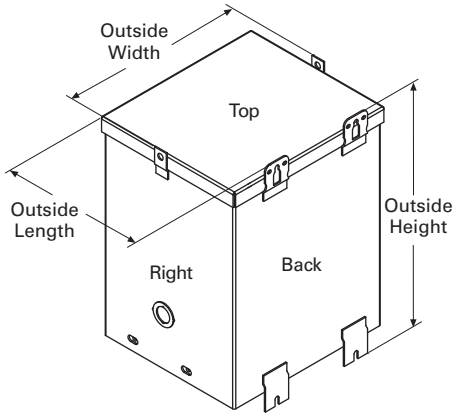

Drawing 10

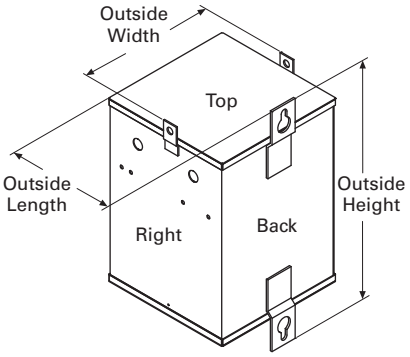

Drawing 11

Frame	Drawing Number	Dimensions Height	Width	Length
FR52	6	8.91 (226.3)	4.11 (104.4)	4.00 (101.6)
FR54	6	8.91 (226.3)	4.11 (104.4)	4.00 (101.6)
FR55	6	8.91 (226.3)	4.11 (104.4)	4.00 (101.6)
FR56	7	8.97 (227.8)	4.87 (123.7)	4.06 (103.1)
FR57	7	8.97 (227.8)	4.87 (123.7)	4.91 (124.7)
FR58A	7	11.28 (286.5)	5.99 (152.1)	5.75 (146.1)
FR59A	7	11.28 (286.5)	5.99 (152.1)	5.75 (146.1)
FR67	7	13.41 (340.6)	6.37 (161.8)	6.52 (165.6)
FR68	7	13.41 (340.6)	6.37 (161.8)	6.52 (165.6)
FR176	8	14.25 (361.9)	7.69 (195.3)	8.00 (203.2)
FR177	9	16.00 (406.4)	10.38 (263.7)	9.89 (251.2)
FR301	11	22.26 (565.4)	12.71 (322.8)	12.79 (324.9)
FR178	9	16.00 (406.4)	10.38 (263.7)	9.89 (251.2)
FR302	11	25.26 (641.6)	12.71 (322.8)	12.79 (324.9)
FR304	11	25.26 (641.6)	14.72 (373.9)	14.82 (376.4)
FR179	9	19.00 (482.6)	13.38 (339.9)	10.52 (267.2)
FR180	9	19.00 (482.6)	13.38 (339.9)	10.52 (267.2)
FR182	10	23.31 (592.1)	16.35 (415.3)	14.12 (358.6)
FR190	10	26.31 (668.3)	16.35 (415.3)	14.12 (358.6)

Approximate Dimensions in Inches (mm)

Enclosure Dimensional Drawings—Encapsulated Transformers Type EP (Single-Phase), continued

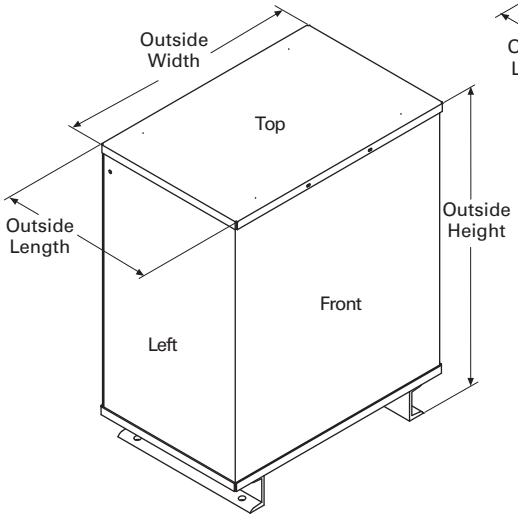

Drawing 12

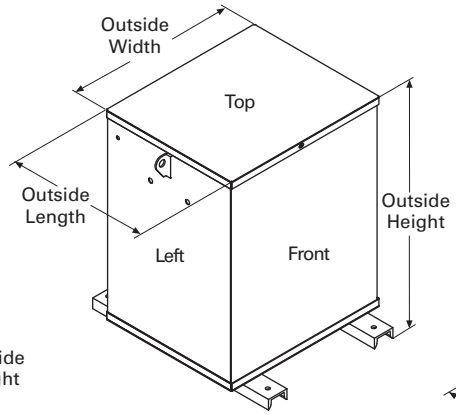

Drawing 13

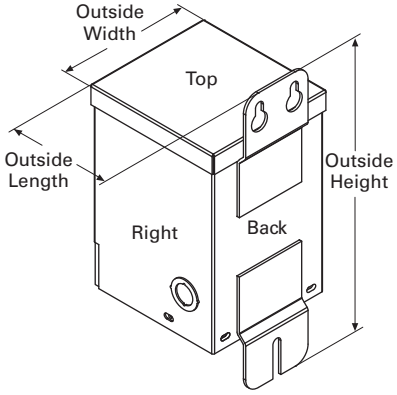

Drawing 14

Frame	Drawing Number	Dimensions Height	Width	Length
FR132	13	20.67 (525.0)	19.02 (483.1)	13.59 (345.2)
FR300A	12	28.24 (717.3)	22.42 (569.5)	14.06 (357.1)
FR57P	14	9.34 (237.2)	4.45 (113.0)	5.18 (131.6)
FR58AP	14	11.68 (296.7)	4.99 (126.7)	5.99 (152.1)
FR567P	14	13.03 (330.9)	5.74 (145.8)	6.56 (166.6)
FR568P	14	13.78 (350.0)	6.22 (158.0)	6.32 (160.5)

Approximate Dimensions in Inches (mm)

Enclosure Dimensional Drawings—Encapsulated Transformers (Type EPT)

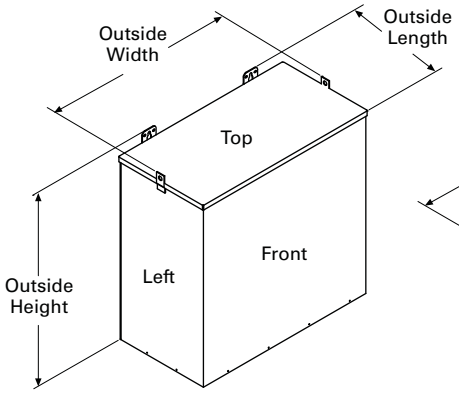

Drawing 15

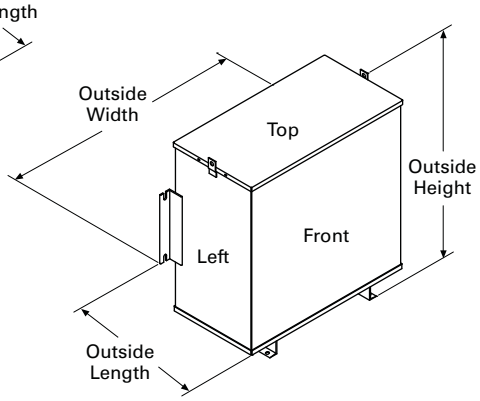

Drawing 16

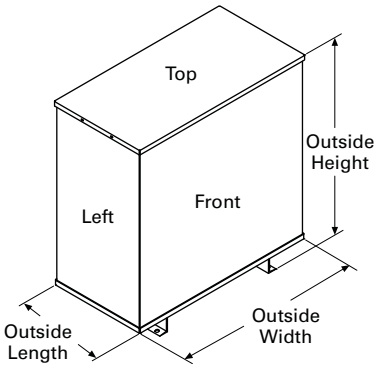

Drawing 17

Frame	Drawing Number	Dimensions Height	Width	Length
FR201	15	13.40 (340.4)	15.93 (404.6	8.26 (209.8)
FR102	15	13.12 (333.2)	19.59 (497.6)	7.09 (180.1)
FR103	15	15.90 (403.9)	16.93 (430.0)	10.01 (254.3)
FR200	15	15.90 (403.9)	16.93 (430.0)	10.01 (254.3)
FR97	15	15.19 (385.8)	25.68 (652.3)	8.38 (212.9)
FR95	15	17.38 (441.5)	20.00 (508.0)	10.52 (267.2)
FR243	16	17.38 (441.5)	20.00 (508.0)	10.52 (267.2)
FR96	15	16.19 (411.2)	29.68 (753.9)	9.42 (239.3)
FR244	16	28.15 (715.0)	26.58 (675.1)	14.66 (372.4)
FR245	17	32.06 (814.3)	30.29 (769.4)	15.68 (398.3)

Approximate Dimensions in Inches (mm)

Enclosure Dimensional Drawings—Totally Enclosed Nonventilated Transformers

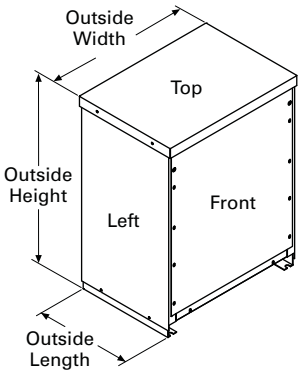

Drawing 26

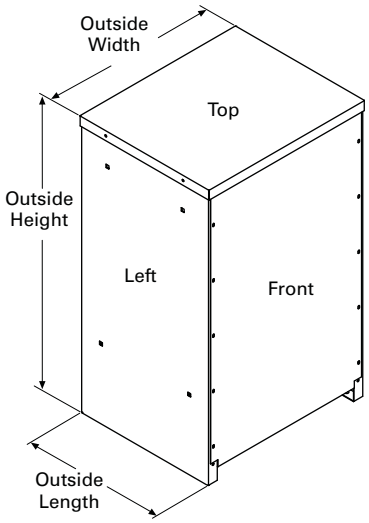

Drawing 27

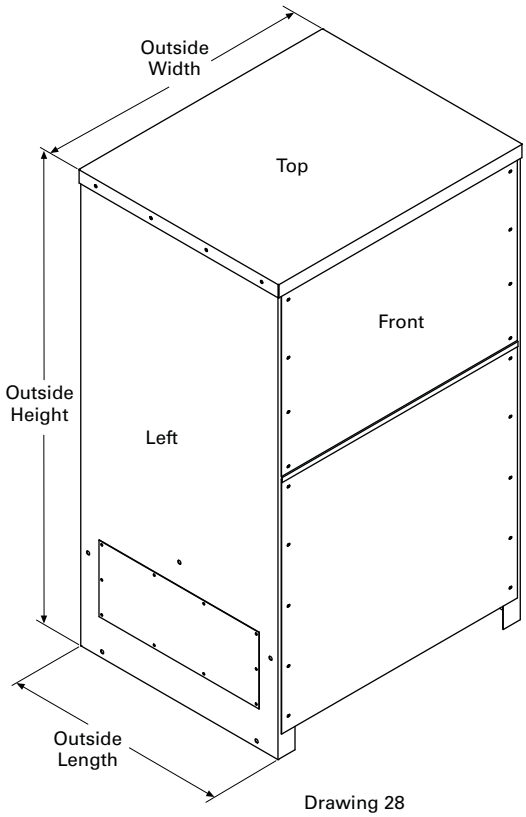

Drawing 28

Frame	Drawing Number	Dimensions Height	Width	Length
FR818N	26	37.59 (954.8)	22.89 (581.4)	20.36 (517.1)
FR819EN	27	42.03 (1067.6)	24.22 (615.2)	23.84 (605.5)
FR820EN	27	42.03 (1067.6)	24.22 (615.2)	23.84 (605.5)
FR814N	27	62.91 (1597.9)	29.97 (761.2)	33.97 (862.8)
FR912DN	26	30.00 (762.0)	23.00 (584.2)	16.50 (419.1)
FR914DN/FR914FN	26	39.18 (995.2)	29.00 (736.6)	22.00 (558.8)
FR915DN/FR915FN	26	39.18 (995.2)	29.00 (736.6)	22.00 (558.8)
FR916AN	27	46.58 (1183.1)	28.22 (716.8)	23.42 (594.9)
FR917N	27	56.18 (1427.0)	31.44 (798.6)	24.67 (626.8)
FR918AN	27	62.18 (1579.4)	31.44 (798.6)	30.68 (779.3)
FR923N	27	57.50 (1460.5)	36.69 (931.9)	32.65 (829.3)
FR919N	28	75.00 (1905.0)	44.21 (1122.9)	36.23 (920.2)
FR920N	28	75.00 (1905.0)	44.21 (1122.9)	36.23 (920.2)

Approximate Dimensions in Inches (mm)

Enclosure Dimensional Drawings—Hazardous Location Transformers (Type EPZ)

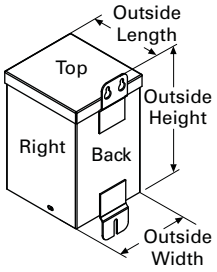

Drawing 21

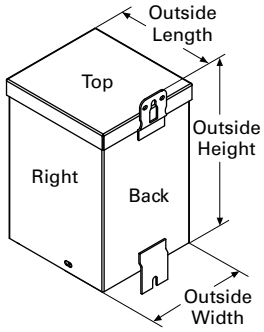

Drawing 22

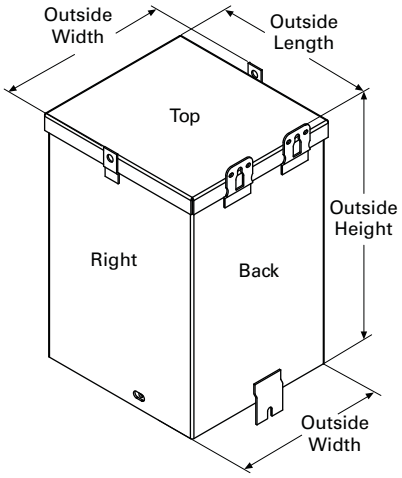

Drawing 23

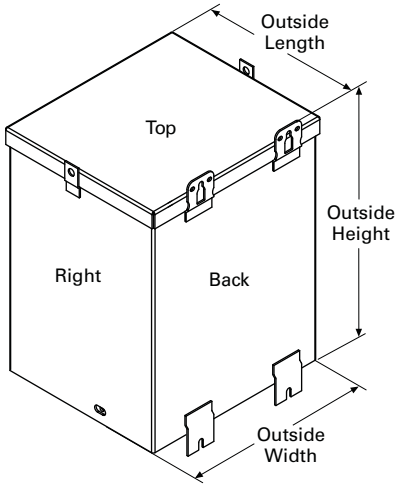

Drawing 24

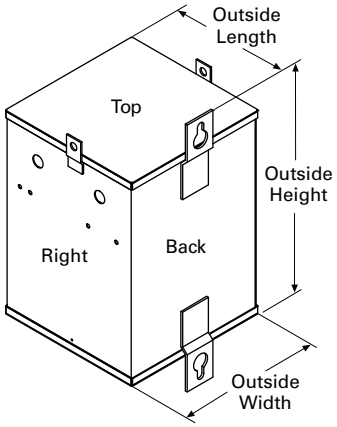

Drawing 25

Frame	Drawing Number	Dimensions Height	Width	Length
FR57H	21	8.97 (227.8)	4.87 (123.7)	4.91 (124.7)
FR58H	22	11.28 (286.5)	5.99 (152.1)	5.75 (146.1)
FR59H	22	11.28 (286.5)	5.99 (152.1)	5.75 (146.1)
FR67H	22	13.41 (340.6)	6.37 (161.8)	6.52 (165.6)
FR68H	22	13.41 (340.6)	6.37 (161.8)	6.52 (165.6)
FR176H	23	14.25 (361.9)	7.69 (195.3)	8.00 (203.2)
FR177H	24	16.00 (406.4)	10.38 (263.7)	9.89 (251.2)
FR178H	24	16.00 (406.4)	10.38 (263.7)	9.89 (251.2)
FR179H	24	19.00 (482.6)	13.38 (339.9)	10.52 (267.2)
FR180H	24	19.00 (482.6)	13.38 (339.9)	10.52 (267.2)
FR182H	25	23.31 (592.1)	16.35 (415.3)	14.12 (358.6)

Approximate Dimensions in Inches (mm)

Enclosure Dimensional Drawings—Hazardous Location Transformers (Type EPTZ)

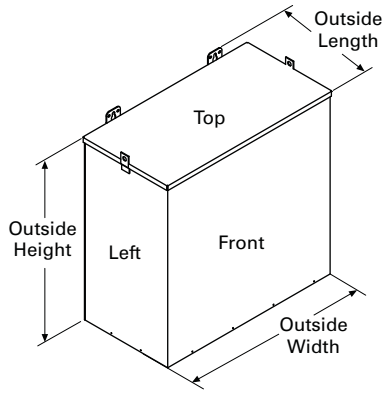

Drawing 18

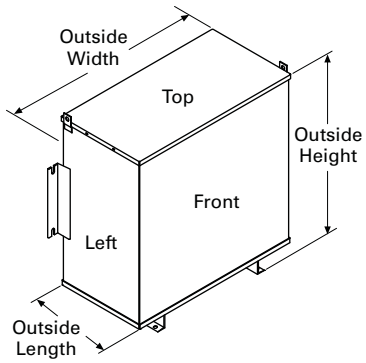

Drawing 19

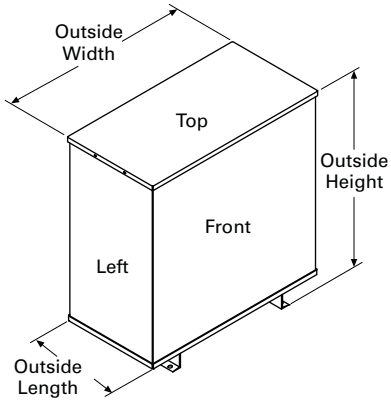

Drawing 20

Frame	Drawing Number	Dimensions Height	Width	Length
FR201H	18	13.40 (340.4)	15.93 (404.6)	8.26 (209.8)
FR200H	18	15.90 (403.9)	16.93 (430.0)	10.01 (254.3)
FR103H	18	15.90 (403.9)	16.93 (430.0)	10.01 (254.3)
FR95H	18	17.38 (441.5)	20.00 (508.0)	10.52 (267.2)
FR243H	19	17.38 (441.5)	20.00 (508.0)	10.52 (267.2)
FR244H	19	28.15 (715.0)	26.58 (675.1)	14.66 (372.4)
FR245H	20	32.06 (814.3)	30.29 (769.4)	15.68 (398.3)