EJB Cover Hinge Kit

Installation & Maintenance Information

COOPER Crouse-Hinds

IF 903

SAVE THESE INSTRUCTIONS FOR FUTURE REFERENCE

APPLICATION

EJB Cover Hinge Kits contain necessary hardware for field installation of cover hinges on EJB-M82 Style C Series Junction Boxes with minimum nominal dimensions of 12 inches long by 12 inches wide. Each kit contains hinge leaf assemblies and support brackets with cap screws and lock nuts for assembly of two hinges (Kit1 or Kit2), three hinges (Kit3), or four hinges (Kit4). The hinge attachment screws are already installed at hinge locations on the EJB Junction Boxes.

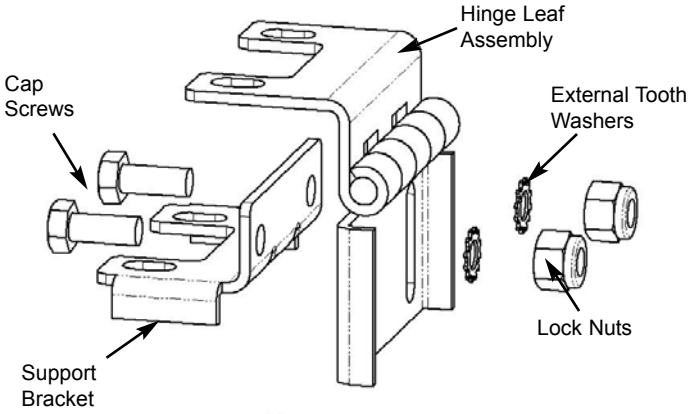

INSTALLATION

⚠CAUTION

To prevent damage to the enclosure, the EJB Junction Box Cover must be securely bolted to the body before attaching hinges.

1. Remove the 5/16-18 x 5/8" cap screws (two screws from the enclosure cover and two from the body) at each hinge location.
2. Fasten the support bracket to the straight hinge leaf using two cap screws, external tooth washers, and lock nuts provided. Do not tighten.
3. Attach support bracket to enclosure body using cap screws provided with EJB Junction Box. Additional external tooth washers have been provided and should be placed under each of the cap screw heads.
4. Attach bent hinge leaf to enclosure cover using cap screws provided with EJB Junction Box. Tighten only by hand, allowing hinge to move on adjustment slots. Again, be sure to place external tooth washers provided beneath each cap screw head.
5. Locate hinge assembly as close to the enclosure as possible and tighten body attachment screws.
6. Tighten support bracket screws and lock nuts.
7. Tighten cover adjustment screws.

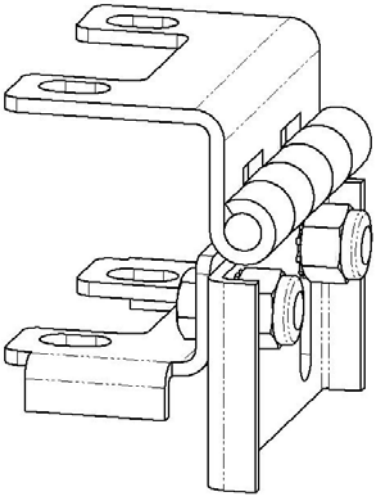

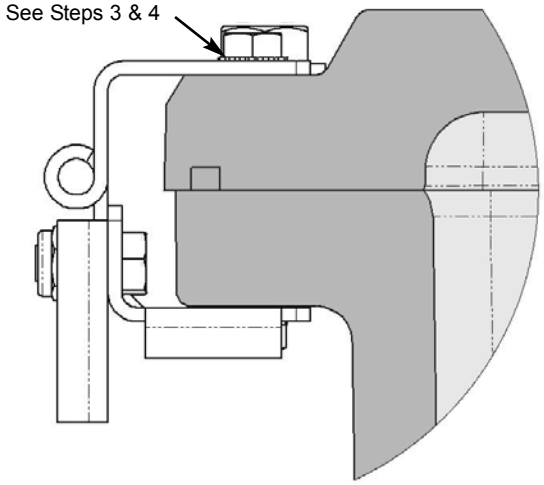

NOTE: All hinge hardware must be tightened to 25-30 ft-lbs.

Hinge Kit	EJB Junction Box		
EJB-Kit1 or EJB-Kit2	EJB121204	EJB181206	
	EJB121206	EJB181208	EJB242408
	EJB121208	EJB241208	EJB242410
	EJB161606	EJB241210	EJB361208
	EJB161608	EJB241808	
EJB-Kit3	EJB361808		
EJB-Kit4	EJB362408		

All statements, technical information and recommendations contained herein are based on information and tests we believe to be reliable. The accuracy or completeness thereof are not guaranteed. In accordance with Cooper Crouse-Hinds "Terms and Conditions of Sale", and since conditions of use are outside our control, the purchaser should determine the suitability of the product for his intended use and assumes all risk and liability whatsoever in connection therewith.

COOPER Crouse-Hinds

Cooper Industries Inc.
Crouse-Hinds Division
PO Box 4999, Syracuse, New York 13221 • U.S.A.
Copyright© 2003, Cooper Industries, Inc.
IF 903
Revision 3
Revised 07/03
Supercedes 04/03