M-9934 1

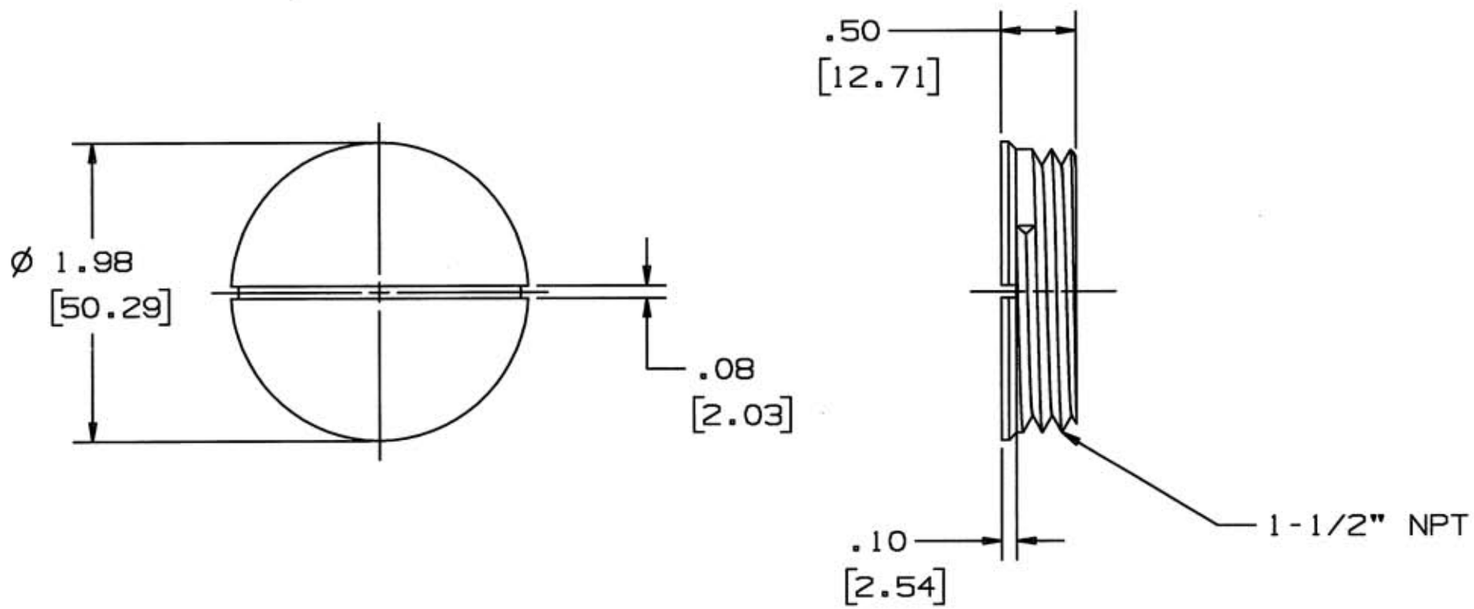

CATALOG NUMBER	COLOR
S1FP15AL	ALUMINUM
S1FP15BL	BLACK
S1FP15BRS	BRASS
S1FP15GY	GRAY

NOTE: INCHES (mm)

LIST OF PARTS

DESCRIPTION	MATERIAL	FINISH
CLOSURE PLUG	ALUMINUM	POWDER COAT

DIMENSION SHEET FOR CAT. NO. SEE TABLE

REPAIRABLE ☐ NON-REPAIRABLE ☐

SYM	REVISIONS	APP	DATE
1	INITIAL RELEASE PER DCN. 12603	TLS	10-5-05

THE DESIGN AND DIMENSIONS OF THE PRODUCT SHOWN ON THIS DRAWING ARE SUBJECT TO CHANGE WITHOUT NOTICE

TITLE
CUSTOMER DRAWING
1-1/2" CLOSURE PLUG

TOLERANCES UNLESS OTHERWISE SPECIFIED
FRACTIONS ±1/64
DECIMALS ±.005
ANGLES ±2°

WIRING DEVICE-KELLEMS
HUBBELL INCORPORATED
BRIDGEPORT, CT

DR. BY TJV	APP. BY TLS
TR. BY	SCALE 1:1
CHK'D BY TLS	DATE 10-5-05

B

M-9934

1

CODE 74545