M-14136 | 1

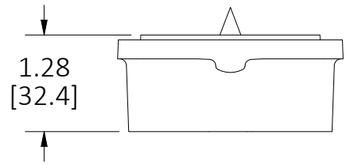

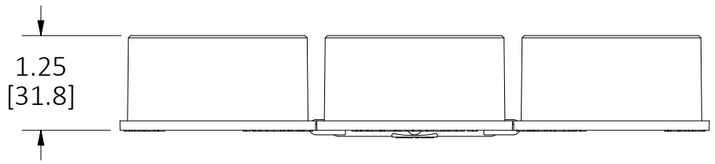

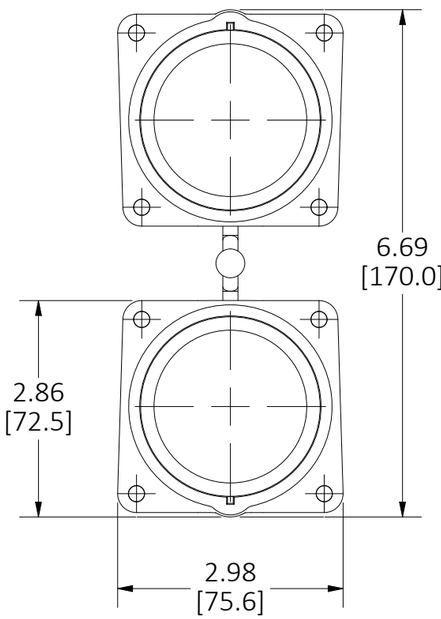

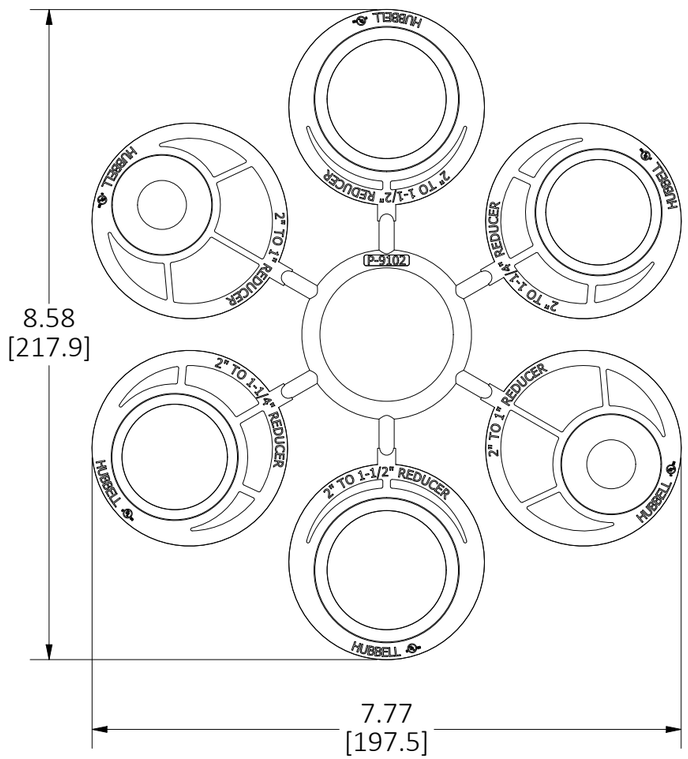

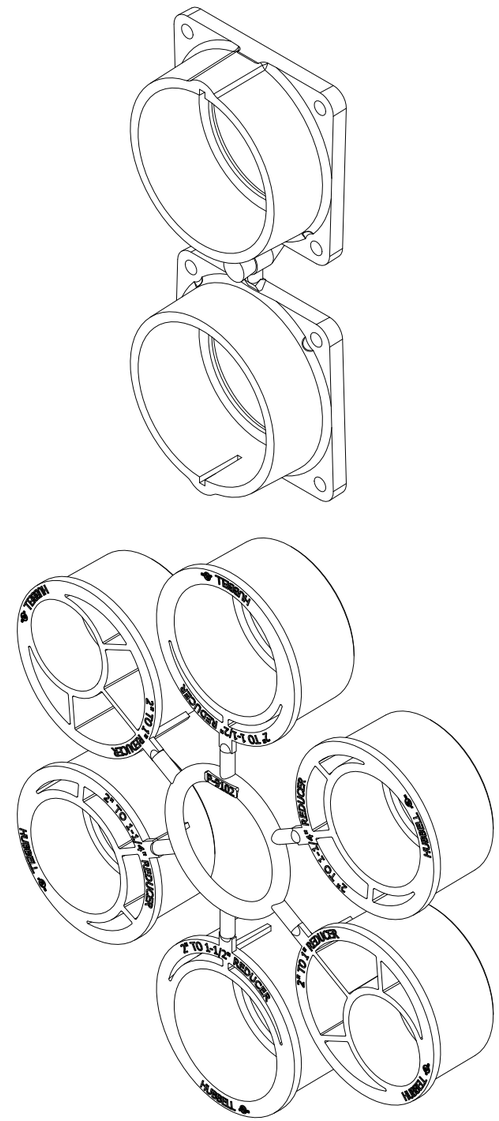

NOTES:

1. ALL DIMENSIONS ARE IN INCHES AND [MILLIMETERS].
2. HUBS ARE SOLD IN PAIRS.
3. FOR USE WITH THE FOLLOWING METALLIC FLOOR BOXES: CFB2G30, CFB2G30CR, CFB2G30R, CFB2G30RCR, CFB2G30E, CFB2G30CRE, CFB2G30RE, CFB2G30RCRE, CFB4G30, CFB4G30CR, CFB4G30R, CFB4G30RCR, CFB4G30E, CFB4G30CRE, CFB4G30RE, CFB4G30RCRE, CFB6G30, CFB6G30CR, CFB6G30R, CFB6G30RCR, CFB6G30E, CFB6G30CRE, CFB6G30RE, CFB6G30RCRE, CFB10G55, CFB10G55CR, CFB10G55R, CFB10G55RCR, CFB10G55E, CFB10G55CRE, CFB10G55RE, CFB10G55RCRE, CFB45G55E, CFB45G55CRE, CFB45G55RE, CFB45G55RCRE, CFBS1R4SFB, CFBS1R4SFBCR.
4. FOR USE WITH THE FOLLOWING NON-METALLIC FLOOR BOXES: CFB4G30PFBE, CFB4G30PFBRE.
5. REDUCERS INCLUDE: (2) 1-1/2" REDUCERS, (2) 1-1/4" REDUCERS, AND (2) 1" REDUCER/PLUGS.
6. FASTENERS INCLUDED, NOT SHOWN.
7. PRODUCT IS cULus LISTED. COMPLIES WITH UL 651.

LIST OF PARTS

DESCRIPTION	MATERIAL	FINISH
HUBS	PVC	GRAY
REDUCERS	PVC	GRAY
FASTENERS	STEEL	ZINC

REV	DESCRIPTION	APP	DATE
1	ORIGINAL RELEASE PER EC 200917000629	SBW	9/21/2020

THE DESIGN AND DIMENSIONS OF THE PRODUCT SHOWN ON THIS DRAWING ARE SUBJECT TO CHANGE WITHOUT NOTICE. DIMENSIONS ARE IN INCHES [mm].

TITLE

2" NON-METALLIC CONDUIT HUBS WITH REDUCERS

WIRING DEVICE-KELLEMS
HUBBELL INCORPORATED
SHELTON, CT

TOLERANCES UNLESS OTHERWISE SPECIFIED
.XX = ± .01
.XXX= ± .005
ANGLE TOL. ±2˚

DR. BY SBW | SCALE 1 / 2
CHK. BY | DATE 9/17/2020

DIMENSION SHEET FOR CAT. NO.
CFBHUB200PVC

B

M-14136

1

CAGE CODE 74545